| Page Title | Page Number |
|---|---|
| Engine | 010-0005 |
| Alternator | 010-0010 |
| Starter | 010-0015 |
| Heater - Engine Block | 010-0020 |
| Cylinder Block | 010-0025 |
| Cylinder Block Equipment | 010-0030 |
| Timing Gear Housing | 010-0035 |
| Flywheel Housing | 010-0040 |
| Crankshaft, Pistons And Connecting Rods | 010-0045 |
| Valve Mechanism And Camshaft | 010-0050 |
| Cylinder Head | 010-0055 |
| Cylinder Head Cover | 010-0060 |
| Thermostat | 010-0065 |
| Lubricating Oil Sump | 010-0070 |
| Lubricating Oil Pump | 010-0075 |
| Lubricating Oil Cooler And Filter | 010-0080 |
| Drive Shaft - Fan Engine | 010-0085 |
| Water Pump | 010-0090 |
| Injection Pump | 010-0095 |
| Stop Magnet | 010-0100 |
| Feed Pump | 010-0105 |
| Fuel Pipings | 010-0110 |
| Injector | 010-0115 |
| Fuel Filter | 010-0120 |
| Inlet And Exhaust Manifold | 010-0125 |
| Turbocharger - Pipes | 010-0130 |
| Cold Starting Device | 010-0135 |
| Belt Tensioner | 010-0140 |
| Engine Repair Kits - Piston- Cylinder Head With Valves | 010-0145 |
| Engine Gaskets Sets | 010-0150 |
| Batteries And Cables - Without Battery Cut-Off | 010-0155 |
| Cooling System - Air Conditioned Installation | 010-0160 |
| Cooling System -Air Conditioned - Sanden Compresser - Up to Serial or Engine Number - H152021 | 010-0165 |
| Cooling System -Air Conditioned - Sanden Compresser - From Serial or Engine Number - H152022 | 010-0170 |
| Cooling System - Engine | 010-0175 |
| Cooling System - Engine | 010-0180 |
| Cab Heating System - Engine Part | 010-0185 |
| Fuel System - Fuel Tank And Attachments | 010-0190 |
| Fuel System - Fuel Tank And Attachments - Additional Tank | 010-0195 |
| Fuel System - Fuel Tank And Attachments - Brackets And Guards - Up To H091014 | 010-0200 |
| Fuel System - Fuel Tank And Attachments - Brackets And Guards - From H091015 | 010-0205 |
| Fuel System - Pipes With Thermostart - With Additional Tank - With Fuel Debit | 010-0210 |
| Fuel System - Fuel Filter | 010-0215 |
| Air Filter - With Thermostart Equipment | 010-0220 |
| Air Filter - Dry - Dual Element | 010-0225 |
| Exhaust System - Vertical | 010-0230 |
| Throttle Controls | 010-0235 |
| Throttle Controls | 010-0240 |
| Throttle Controls - Hand | 010-0245 |

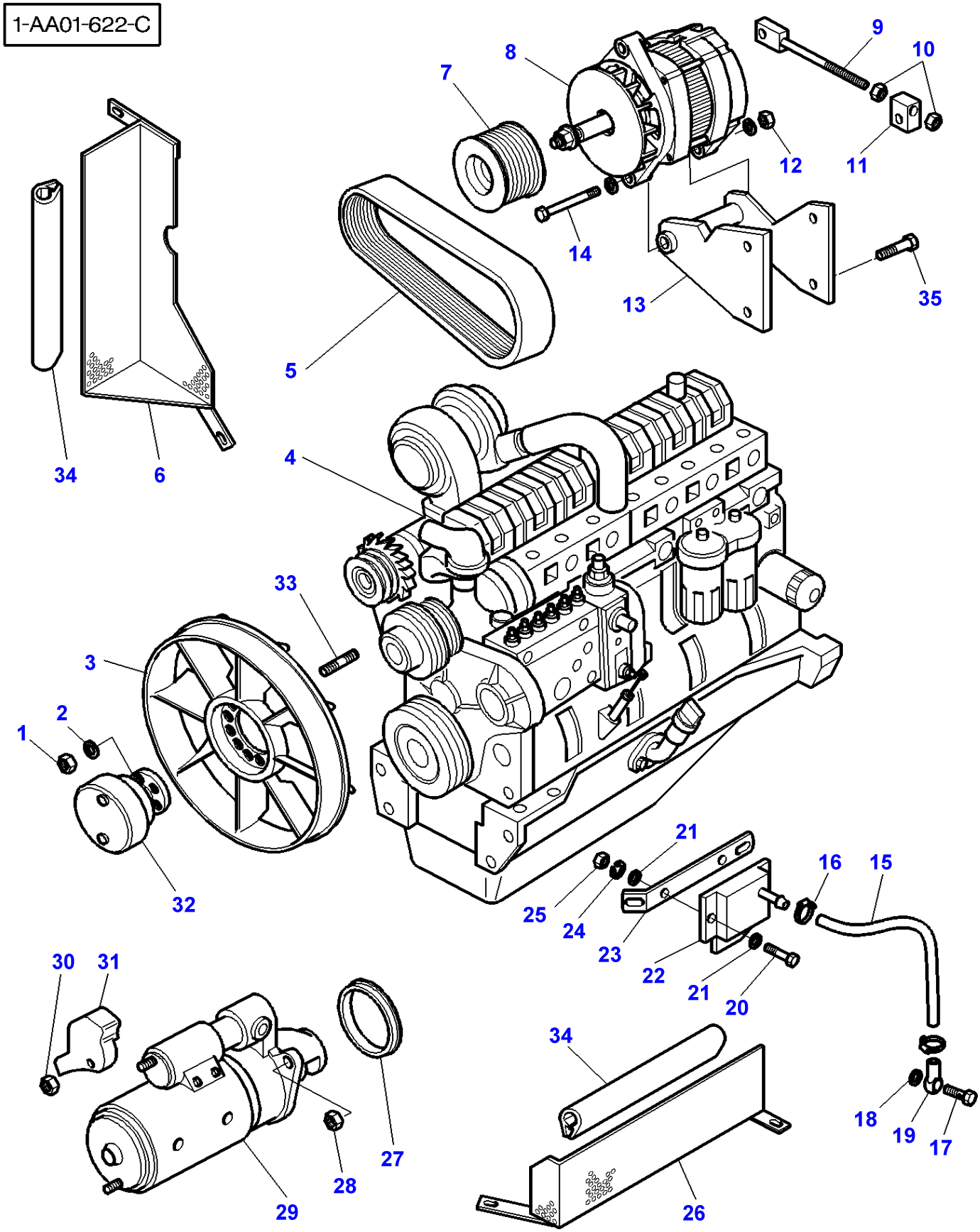
1-AA01-622-C
1
2
3
4
5
6
7
8
9
10
11
12
13
14
15
16
17
18
19
20
21
22
23
24
25
26
27
28
29
30
31
32
33
34
35

| Item | Part Number | Qty | Description | Comments |
|---|---|---|---|---|
| 1 | 1440329X1 | 6 | Locknut | M10 |
| 2 | 390734X1 | 6 | Washer | |
| 3 | 3777244M1 | 1 | Fan | |
| 4 | 3780391M91 | 1 | Engine | DSBIE |
| 5 | **V836859262** | 1 | Belt | |
| 6 | 3777415M2 | 1 | Cowl | |
| 7 | 3777253M1 | 1 | Pulley | |
| 8 | **71370306** | 1 | Alternator | |
| 9 | 3779474M1 | 1 | Clevis Pin | |
| 10 | 3009693X1 | 2 | Nut Metric | |
| 11 | 3779475M1 | 1 | Clevis Pin | |
| 12 | 375098X1 | 1 | Nut Unc | |
| 13 | 3779473M2 | 1 | Support | |
| 14 | 354679X1 | 1 | Screw | 1/2-13 X 153 |
| 15 | 3777331M1 | 1 | Hydr Hose | |
| 16 | 338612X1 | 2 | Hose Clip | |
| 17 | 3777549M1 | 1 | Screw | |
| 18 | 3007188X1 | 1 | Gasket | |
| 19 | 3777546M1 | 1 | Union | |
| 20 | 339262X1 | 2 | Bolt Metric | M6X20 |
| 21 | 390971X1 | 4 | Washer | |
| 22 | **72502305** | 1 | Transmitter | [A] |
| 23 | 3777330M1 | 1 | Support | |
| 24 | 339375X1 | 2 | Lock Washer | |
| 25 | 339030X1 | 2 | Nut Metric | |
| 26 | 3777416M3 | 1 | Cowl | |
| 27 | 3778469M1 | 1 | Spacer | |
| 28 | 3009693X1 | 3 | Nut Metric | |
| 29 | 3777247M1 | 1 | Startermotor | |
| 30 | 3611638M1 | 1 | Nut | Up to Serial or Engine Number G166015 |
| 31 | 3611662M1 | 1 | Cover | Up to Serial or Engine Number G166015 |
| | 3780936M1 | 1 | Cover | From Serial or Engine Number G166016 |
| 32 | 3777245M2 | 1 | Clutch | |
| 33 | 391005X1 | 6 | Stud | M10X25 |
| 34 | 3616268M1 | 1 | Gasket | Length 350MM |
| | 3714513M1 | 1 | Gasket | Length 450MM |
| 35 | 339123X1 | 2 | Hex. Sock. Screw | M8X20 |
| | 339291X1 | 2 | Hex. Sock. Screw | M8X55 |

**FOOTNOTE [A]** TURBO PRESSURE TRANSDUCER

1-AC33-003-A

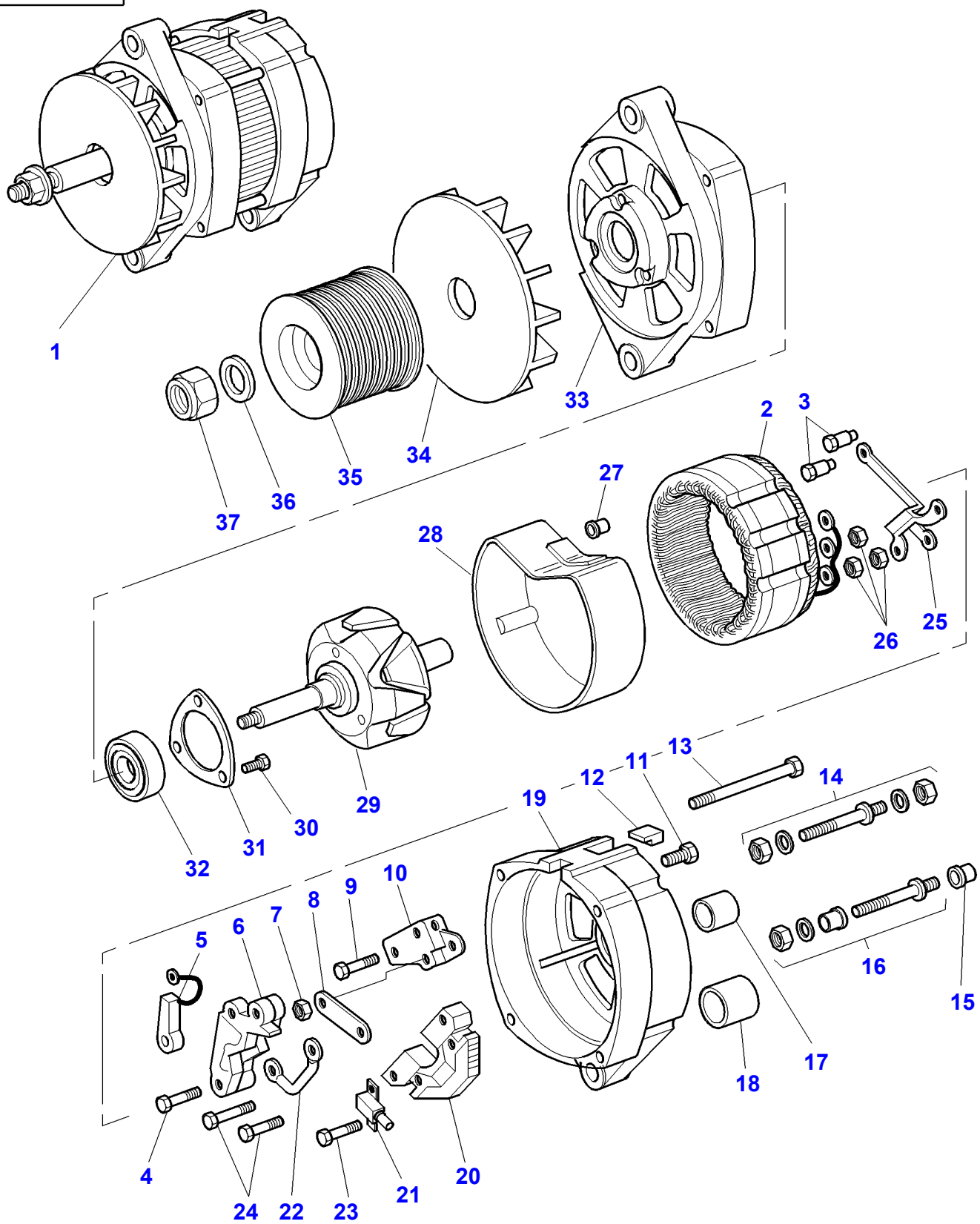
1
2
3
4
5
6
7
8
9
10
11
12
13
14
15
16
17
18
19
20
21
22
23
24
25
26
27
28
29
30
31
32
33
34
35
36
37

| Item | Part Number | Qty | Description | Comments |
|---|---|---|---|---|
| 1 | **71370306** | 1 | Alternator | |
| 2 | 71370855 | 1 | Stator | (1) |
| 3 | 71173328 | 2 | Kit, Screw | (1) |
| 4 | 71327160 | 1 | Screw | (1) |
| 5 | **71370867** | 1 | Brush | (1) |
| 6 | **71370866** | 1 | Holder | (1) |
| 7 | 355564X1 | 1 | Nut Unc | (1) |
| 8 | 71370863 | 1 | Connector | (1) |
| 9 | 70918268 | 1 | Washer | (1) |
| 10 | **71370860** | 1 | Regulator | (1) |
| 11 | 71370880 | 1 | Screw | (1) 8-32X1 3/4 |
| | 71370881 | 1 | Screw | (1) 1/4-20X2 |
| | 70921880 | 1 | Washer | (1) |
| 12 | 71370570 | 1 | Tube | (1) |
| 13 | 71370879 | 4 | Screw | (1) 10-24 X 2 1/2 |
| 14 | 71370861 | 1 | Kit, Rod | (1) |
| 15 | 30-3413926 | 1 | Cap | (1) |
| 16 | 71370862 | 1 | Kit, Rod | (1) |
| 17 | 72162794 | 1 | Bearing | (1) |
| 18 | 30-3413918 | 1 | Bush | (1) |
| 19 | 71370852 | 1 | Frame | (1) |
| 20 | **71370858** | 1 | Diode | (1) |
| 21 | **71370865** | 1 | Capacitor | (1) |
| 22 | 71370864 | 1 | Connector | (1) |
| 23 | 71370877 | 1 | Screw | (1) 8-32 X 1 1/8 |
| 24 | 71370874 | 3 | Screw | (1) 8-32 X 1 |
| 25 | **71370859** | 1 | Diode | (1) |
| 26 | 70917385 | 3 | Nut | (1) 8-32 |
| 27 | 72506418 | 2 | Stub | (1) |
| 28 | 71370808 | 1 | Cover | (1) |
| 29 | 71370854 | 1 | Rotor | (1) |
| 30 | 71370878 | 3 | Screw | (1) 8 X 1/2 |
| 31 | 71370868 | 1 | Plate | (1) |
| 32 | 30-3413837 | 1 | Bearing | (1) |
| 33 | 71370856 | 1 | Frame | (1) |
| 34 | 71370872 | 1 | Fan | (1) |
| 35 | 3777253M1 | 1 | Pulley | |
| 36 | 70918268 | 1 | Washer | (1) |
| 37 | 70930986 | 1 | Nut | (1) |

1-AC37-603-A

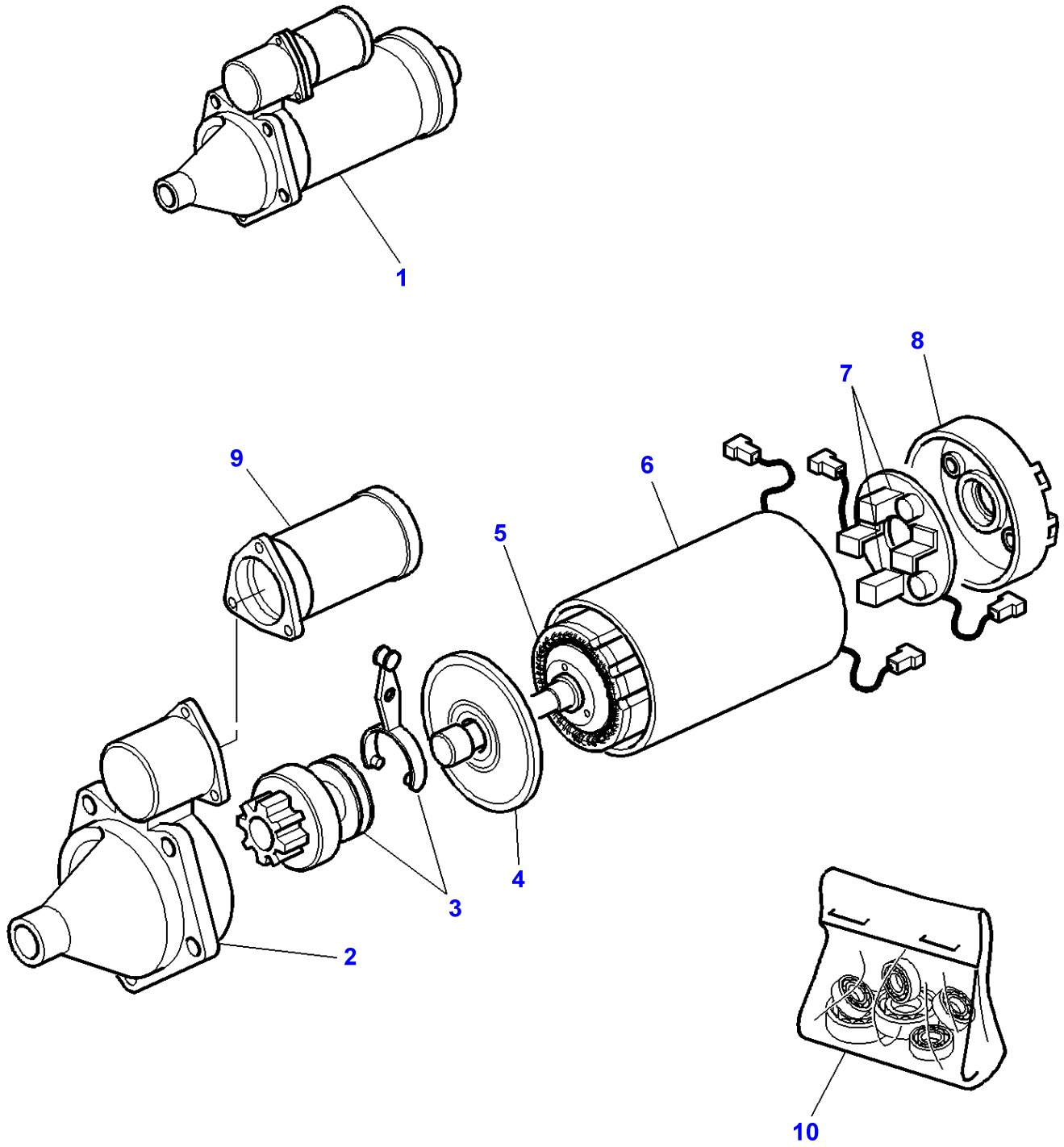

| Item | Part Number | Qty | Description | Comments |
|---|---|---|---|---|
| 1 | 3777247M1 | 1 | Startermotor | |
| 2 | 3903008M91 | 1 | Bracket | (1) |
| 3 | 3903012M91 | 1 | Drive | (1)<br>Number of teeth/spines 10 |
| 4 | 3903015M1 | 1 | Bearing Plate | (1) |
| 5 | 3903011M1 | 1 | Armature | (1) |
| 6 | 3903010M91 | 1 | Coil | (1) |
| 7 | 3903013M91 | 1 | Kit, Brush | (1) |
| 8 | 3903009M91 | 1 | Bracket | (1) |
| 9 | **3902929M1** | 1 | Solenoid | (1) |
| 10 | 3903014M91 | X | Kit, Bush | |

1-AC38-602-C

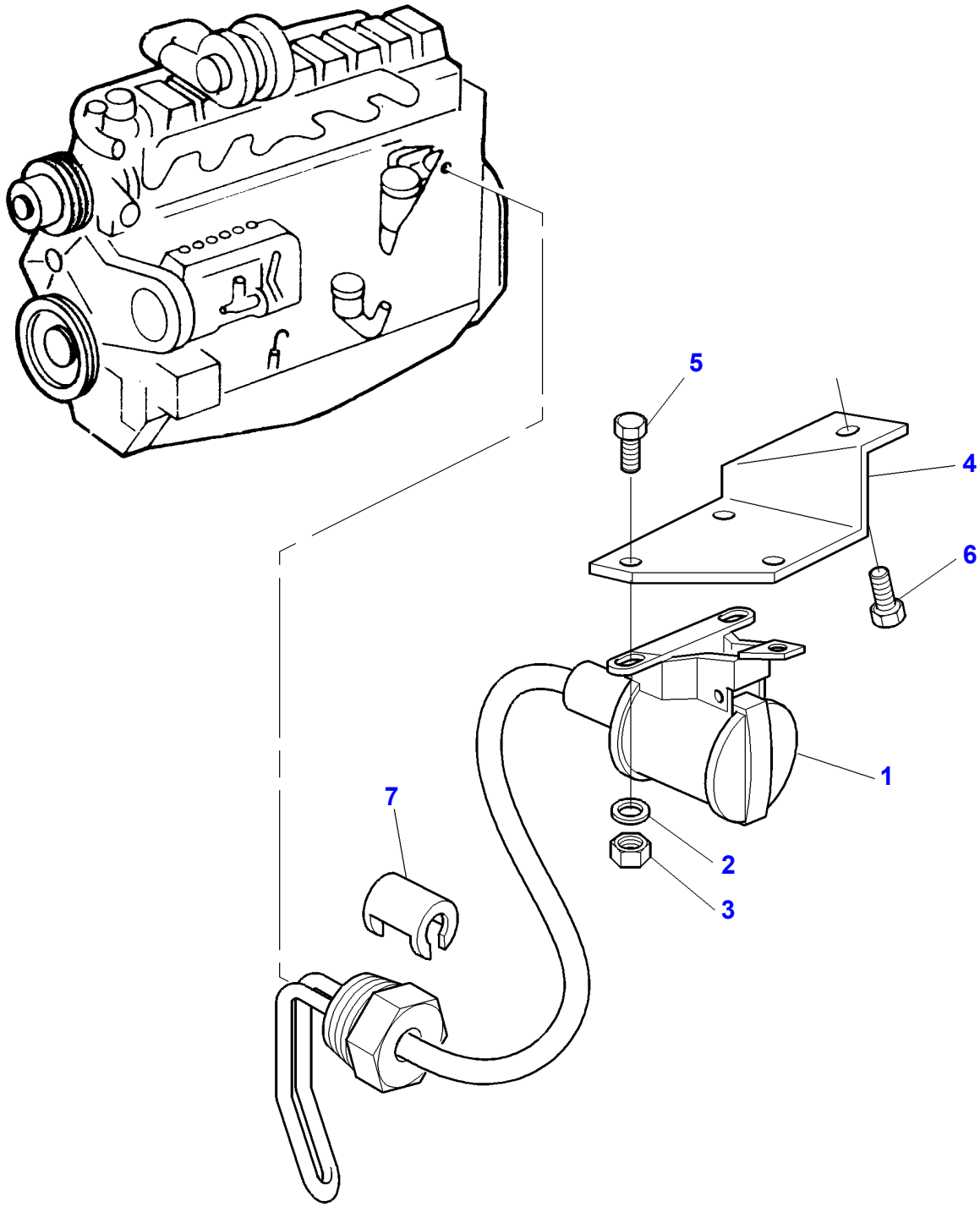

| Item | Part Number | Qty | Description | Comments |
|---|---|---|---|---|
| 1 | 3615752M2 | 1 | Element | |
| 2 | 3006154X1 | 3 | Washer | |
| 3 | 1443615X1 | 3 | Nut Metric | |
| 4 | 3615753M1 | 1 | Support | |
| 5 | 3009531X1 | 3 | Screw Metric | M4X12 |
| 6 | 339124X1 | 1 | Hex. Sock. Screw | |
| 7 | 3611974M1 | 1 | Clip | |

1-LA01-605-A

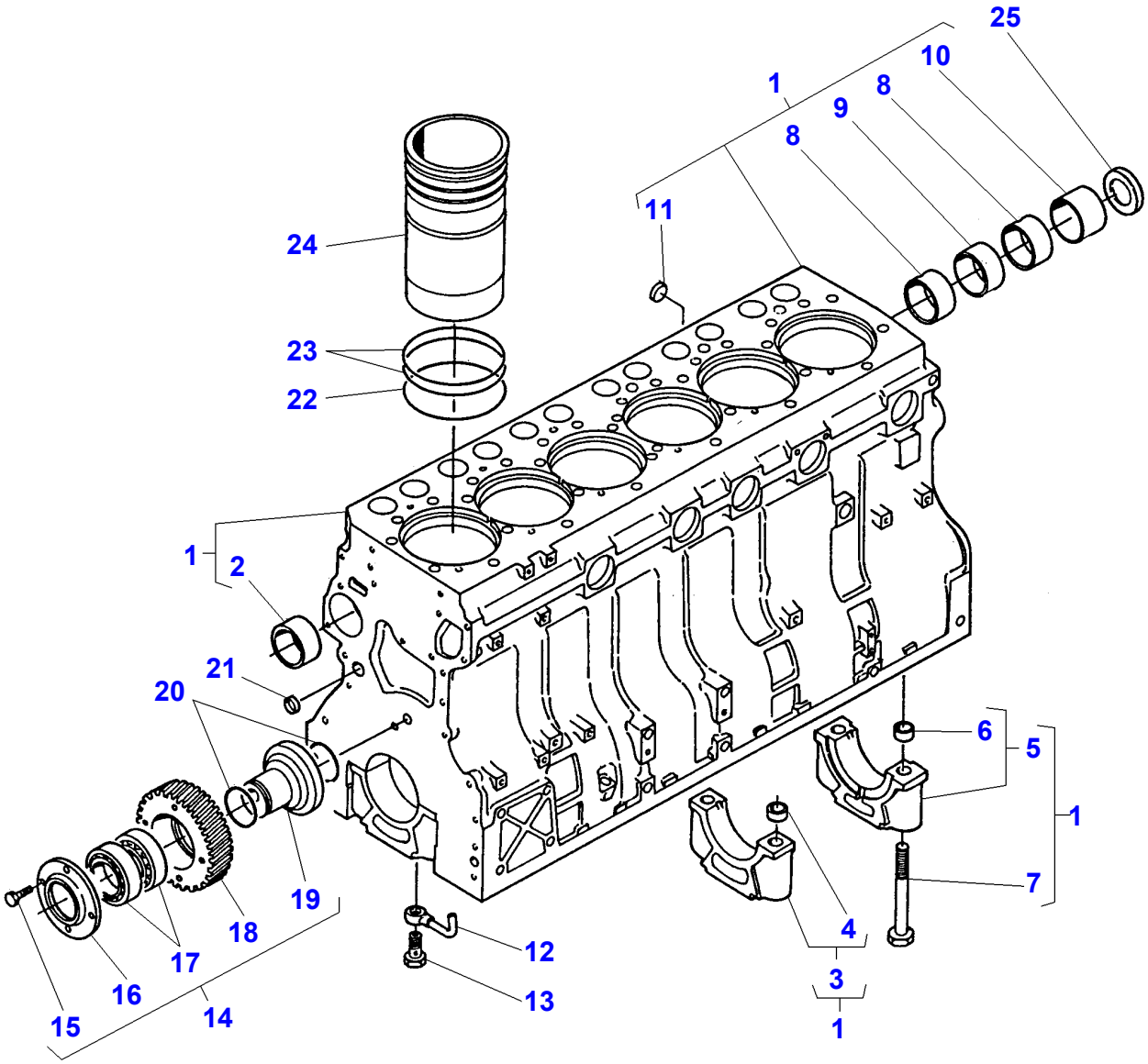

| Item | Part Number | Qty | Description | Comments |
|---|---|---|---|---|
| 1 | V836859155 | 1 | Cylinder Block | |
| 2 | V836322610 | 1 | Bush | (1) |
| 3 | | 6 | Bearing Carrier | [A] (1) |
| 4 | V836214478 | 2 | Bush | (3) |
| 5 | | 1 | Bearing Carrier | [A] (1) |
| 6 | V836214478 | 2 | Bush | (5) |
| 7 | V529903180 | 14 | Screw | (1) |
| 8 | V836852460 | 2 | Bush | (1) |
| 9 | V836852459 | 1 | Bush | (1) |
| 10 | V836852461 | 1 | Bush | (1) |
| 11 | V640016018 | 1 | Plug | (1) |
| 12 | V836846231 | 6 | Pipe | |
| 13 | V836338601 | 6 | Valve | |
| 14 | V836859165 | 1 | Gear | |
| 15 | V528801380 | 4 | Screw | (14) M8X20 |
| 16 | V836859164 | 1 | Flange | (14) |
| 17 | V610071079 | 2 | Bearing Ball | (14) |
| 18 | V836859163 | 1 | Gear | (14) |
| 19 | V836859162 | 1 | Shaft | (14) |
| 20 | V614603024 | 2 | O Ring | |
| 21 | V640016016 | 4 | Plug | |
| 22 | V836855447 | 6 | O Ring | |
| 23 | V836855446 | 12 | O Ring | |
| 24 | V836855445 | 6 | Liner | |
| 25 | V836852744 | 4 | Plug | |

**FOOTNOTE [A]** NUMBER TO BE ADVISED

1-LA02-606-A

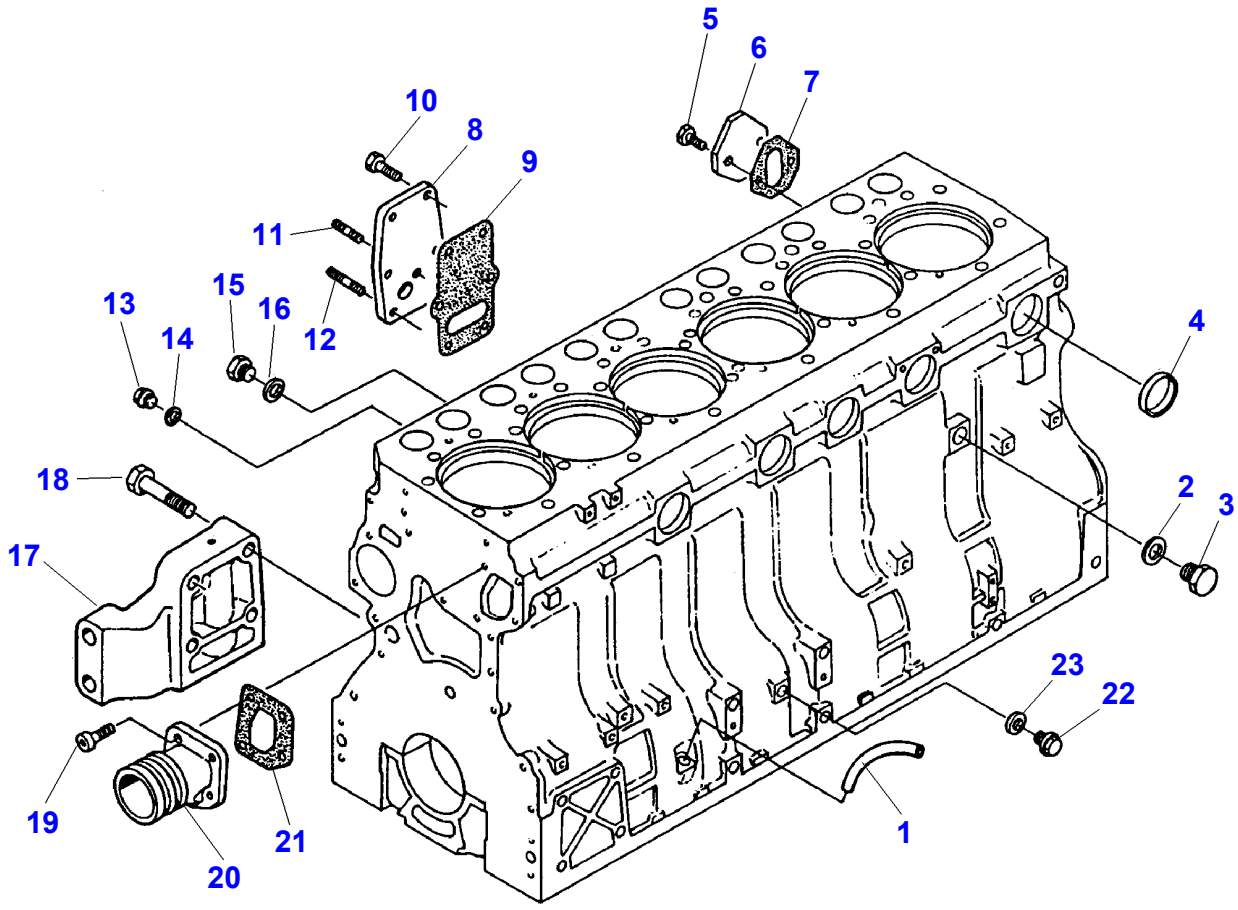

| Item | Part Number | Qty | Description | Comments |
|---|---|---|---|---|
| 1 | V836855997 | 1 | Pipe | |
| 2 | V615881824 | 1 | Seal | |
| 3 | V836019756 | 1 | Plug | |
| 4 | V640016040 | 5 | Plug | |
| 5 | V528801362 | 2 | Screw | M8X16 |
| 6 | V836647400 | 1 | Cover | |
| 7 | V836647401 | 1 | Gasket | |
| 8 | V836855678 | 1 | Cover | |
| 9 | V836322852 | 1 | Gasket | |
| 10 | V528801380 | 5 | Screw | M8X20 |
| 11 | V546801360 | 1 | Bolt | M8X16 |
| 12 | V546801400 | 1 | Bolt | M8X25 |
| 13 | V640325110 | 5 | Plug | |
| 14 | V615571014 | 5 | Seal | |
| 15 | V836119079 | 1 | Plug | |
| 16 | V615881620 | 1 | Seal | |
| 17 | V836338483 | 1 | Support | Right Hand |
| | V836338482 | 1 | Support | Left Hand |
| 18 | V529802290 | 8 | Screw | M12X70 |
| 19 | V581804600 | 4 | Screw | |
| 20 | V836855629 | 1 | Sleeve | |
| 21 | V836855554 | 1 | Gasket | |
| 22 | V640325014 | 1 | Plug | |
| 23 | V615881420 | 1 | Gasket | |

1-LA03-608-A

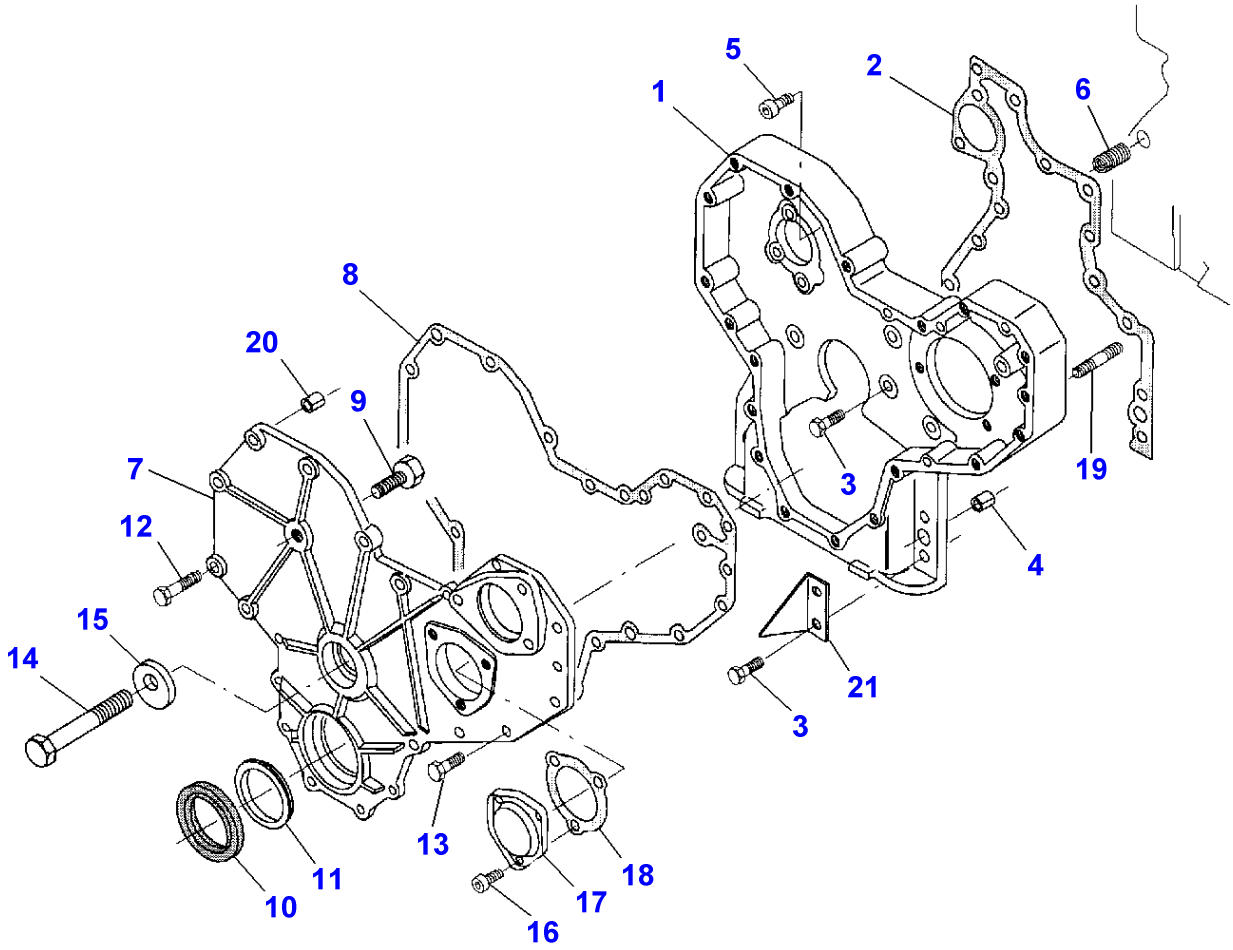

| Item | Part Number | Qty | Description | Comments |
|---|---|---|---|---|
| 1 | V836859150 | 1 | Housing | |
| 2 | V836647419 | 1 | Gasket | |
| 3 | V528801400 | 15 | Screw | M8X25 |
| 4 | V598359850 | 2 | Pin | |
| 5 | V581804620 | 1 | Screw | M8X25 |
| 6 | V836859153 | 1 | Nipple | |
| 7 | V836859151 | 1 | Cover | |
| 8 | V836859152 | 1 | Gasket | |
| 9 | V836859160 | 1 | Restrictor | |
| 10 | V836840883 | 1 | Oil Seal | |
| 11 | V836855636 | 1 | Gasket | |
| 12 | V529801430 | 4 | Screw | M8X40 |
| 13 | V528801410 | 13 | Adjusting Screw | M8X30 |
| 14 | V529902730 | 1 | Screw | M14X90 |
| 15 | V836859161 | 1 | Bridle | |
| 16 | V581804570 | 3 | Screw | M8X12 |
| 17 | V836136717 | 1 | Cover | |
| 18 | V836129946 | 1 | Gasket | |
| 19 | V546801860 | 3 | Stud | |
| 20 | V598359860 | 2 | Pin | |
| 21 | V836859588 | 1 | Angle | |

1-LA04-605-A

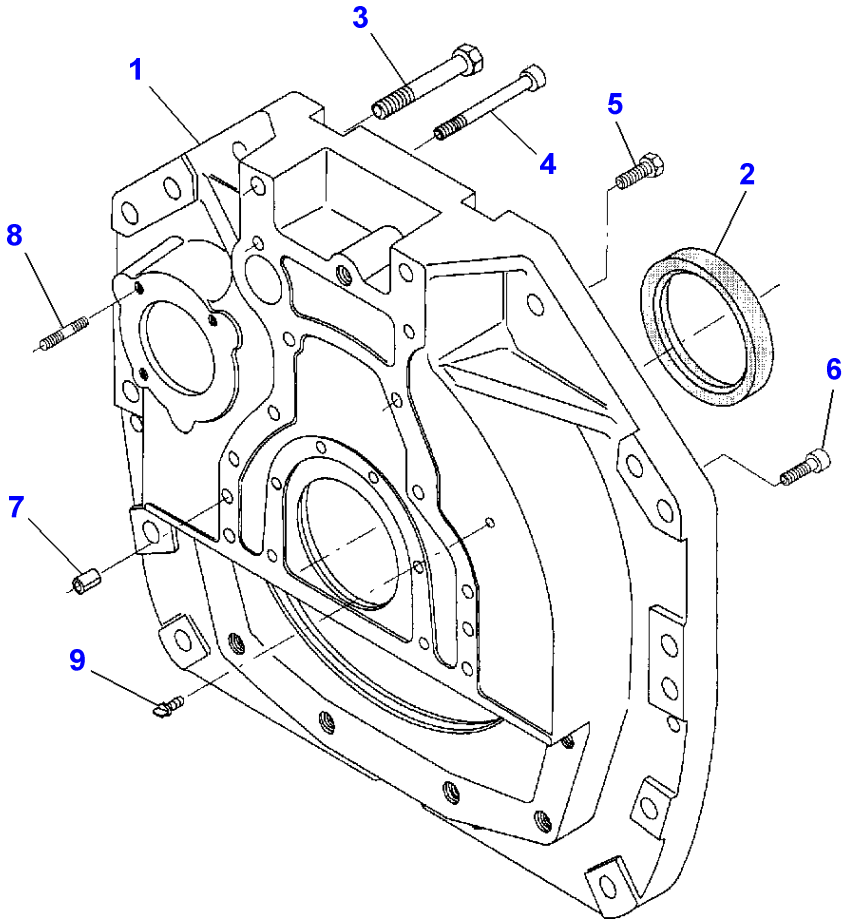

| Item | Part Number | Qty | Description | Comments |
|---|---|---|---|---|
| 1 | V836855925 | 1 | Cover | |
| 2 | V836840884 | 1 | Oil Seal | |
| 3 | V529803160 | 2 | Screw | M16X110 |
| 4 | V581705580 | 2 | Screw | M12X110 |
| 5 | V528902230 | 8 | Screw | M12X40 |
| 6 | V581705030 | 6 | Screw | M10X30 |
| 7 | V598359850 | 2 | Pin | |
| 8 | V546801800 | 3 | Bolt | M10X25 |
| 9 | V836859311 | 1 | Plug | |

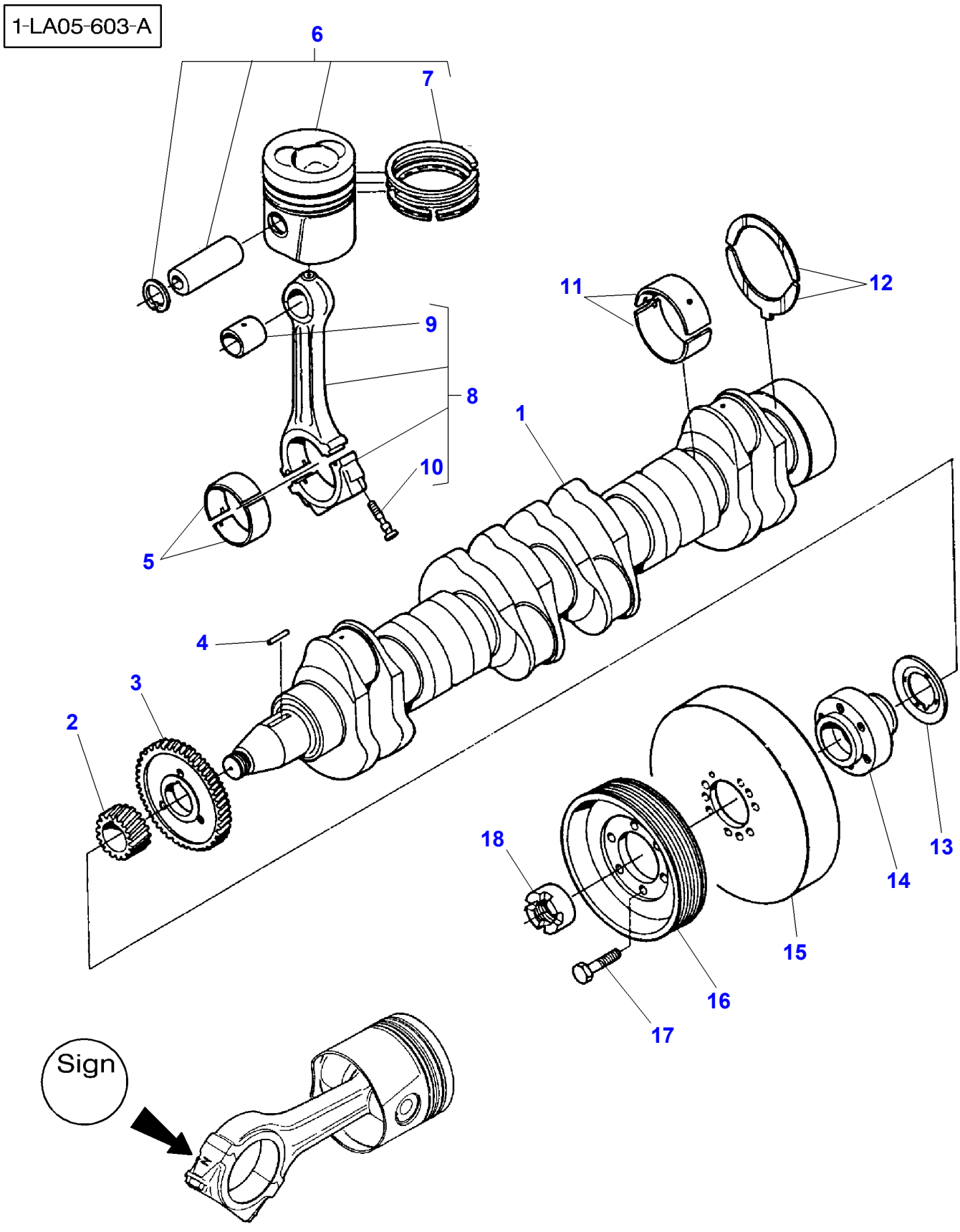
1-LA05-603-A
6
7
9
8
10
5
11
12
1
4
3
2
18
13
14
15
16
17
Sign

| Item | Part Number | Qty | Description | Comments |
|---|---|---|---|---|
| 1 | V836855910 | 1 | Crankshaft | |
| 2 | V836855559 | 1 | Gear | |
| 3 | V836855558 | 1 | Gear | |
| 4 | V836855525 | 1 | Key | |
| 5 | V836336302 | 6 | Bearing | STANDARD |
| | V836338650 | X | Bearing | Diameter 72,731MM 72,750MM |
| | V836338651 | X | Bearing | Diameter 72,481MM 72,500MM |
| | V836338652 | X | Bearing | Diameter 71,981MM 72,000MM |
| | V836338653 | X | Bearing | Diameter 71,481MM 71,500MM |
| 6 | V836840886 | 6 | Piston | |
| 7 | V836840887 | 1 | Kit, Piston Ring | (6) |
| 8 | V836355175 | X | Conrod | 2931-2950g C |
| | V836355176 | X | Conrod | 2951-2970g D |
| | V836352751 | X | Conrod | 2971-2990g E |
| | V836352752 | X | Conrod | 2991-3010g F |
| | V836352753 | X | Conrod | 3011-3030g G |
| | V836352754 | X | Conrod | 3031-3050g H |
| | V836352755 | X | Conrod | 3051-3070g I |
| | V836352756 | X | Conrod | 3071-3090g J |
| | V836352757 | X | Conrod | 3091-3110g K |
| | V836352758 | X | Conrod | 3111-3130g L |
| | V836352759 | X | Conrod | 3131-3150g M |
| | V836352760 | X | Conrod | 3151-3170g N |
| | V836352761 | X | Conrod | 3171-3190g O |
| | V836352762 | X | Conrod | 3191-3210g P |
| | V836352763 | X | Conrod | 3211-3230g R |
| | V836352764 | X | Conrod | 3231-3250g S |
| | V836352765 | X | Conrod | 3251-3270g T |
| | V836352766 | X | Conrod | 3271-3290g U |
| | V836352767 | X | Conrod | 3291-3310g V |
| | V836352768 | X | Conrod | 3311-3330g X |
| | V836352769 | X | Conrod | 3331-3350g Y |
| | V836352770 | X | Conrod | 3351-3370g Z |
| 9 | V836336297 | 1 | Bush | (8) |
| 10 | V836336296 | 2 | Screw | (8) |
| 11 | V836840944 | 7 | Main Bearing | STANDARD |
| | V836840978 | X | Main Bearing | Diameter 89,735MM 89,770MM |
| | V836840979 | X | Main Bearing | Diameter 89,485MM 89,520MM |
| | V836840980 | X | Main Bearing | Diameter 88,985MM 89,020MM |
| | V836840981 | X | Main Bearing | Diameter 88,485MM 88,520MM |
| 12 | V836840945 | 2 | Thrust Washer | STANDARD |
| | V836840982 | X | Thrust Washer | 0,1MM |
| | V836840983 | X | Thrust Washer | 0,2MM |
| 13 | V836855637 | 1 | Ring | |
| 14 | V836855641 | 1 | Hub | |
| 15 | V836840882 | 1 | Shock Absorber | |
| 16 | V836855690 | 1 | Pulley | |
| 17 | V528902230 | 6 | Screw | M12X40 |
| 18 | V836322221 | 1 | Nut | |

1-LA06-602-A

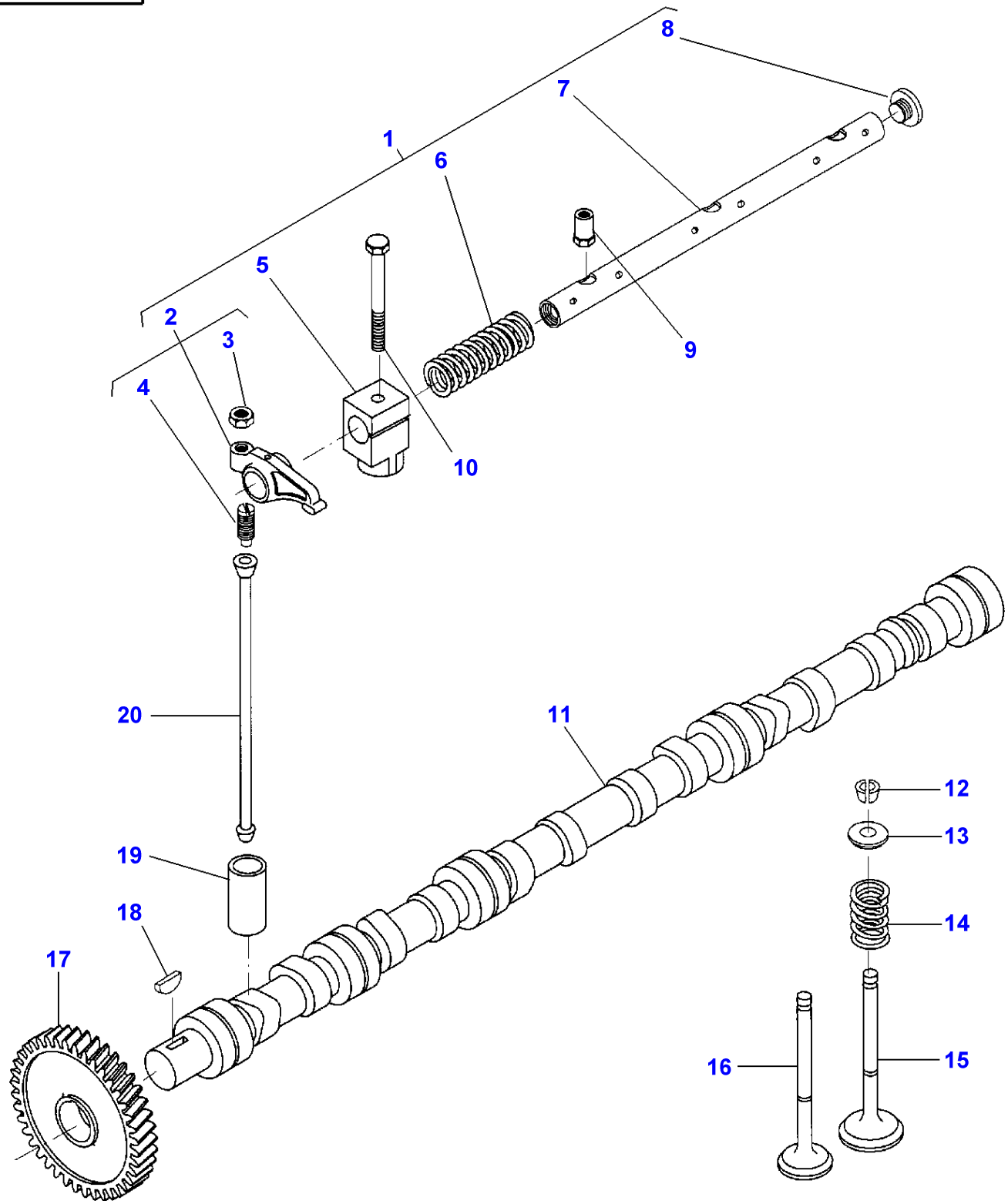

| Item | Part Number | Qty | Description | Comments |
|---|---|---|---|---|
| 1 | V836655911 | 2 | Rocker Shaft | |
| 2 | V836655873 | 6 | Rocker | (1) |
| 3 | V512861000 | 6 | Nut | (2) |
| 4 | V836655866 | 6 | Adjusting Screw | (2) |
| 5 | V836655869 | 3 | Bracket | (1) |
| 6 | V836655884 | 2 | Spring | (1) |
| 7 | V836655870 | 1 | Shaft | (1) |
| 8 | V836655899 | 2 | Plug | (1) |
| 9 | V836655406 | 4 | Nut | |
| 10 | V529801910 | 2 | Screw | M10X80 |
| 11 | V836846376 | 1 | Camshaft | |
| 12 | V836646382 | 24 | Cotter | |
| 13 | V836646381 | 12 | Cup | |
| 14 | V836646380 | 12 | Spring | |
| 15 | V836646356 | 6 | Valve Inlet | |
| 16 | V836646357 | 6 | Valve Exhaust | |
| 17 | V836855568 | 1 | Gear | |
| 18 | V603305760 | 1 | Key | |
| 19 | V836014264 | 12 | Tappet | |
| 20 | V836355872 | 12 | Rod | |

1-LA07-607-A

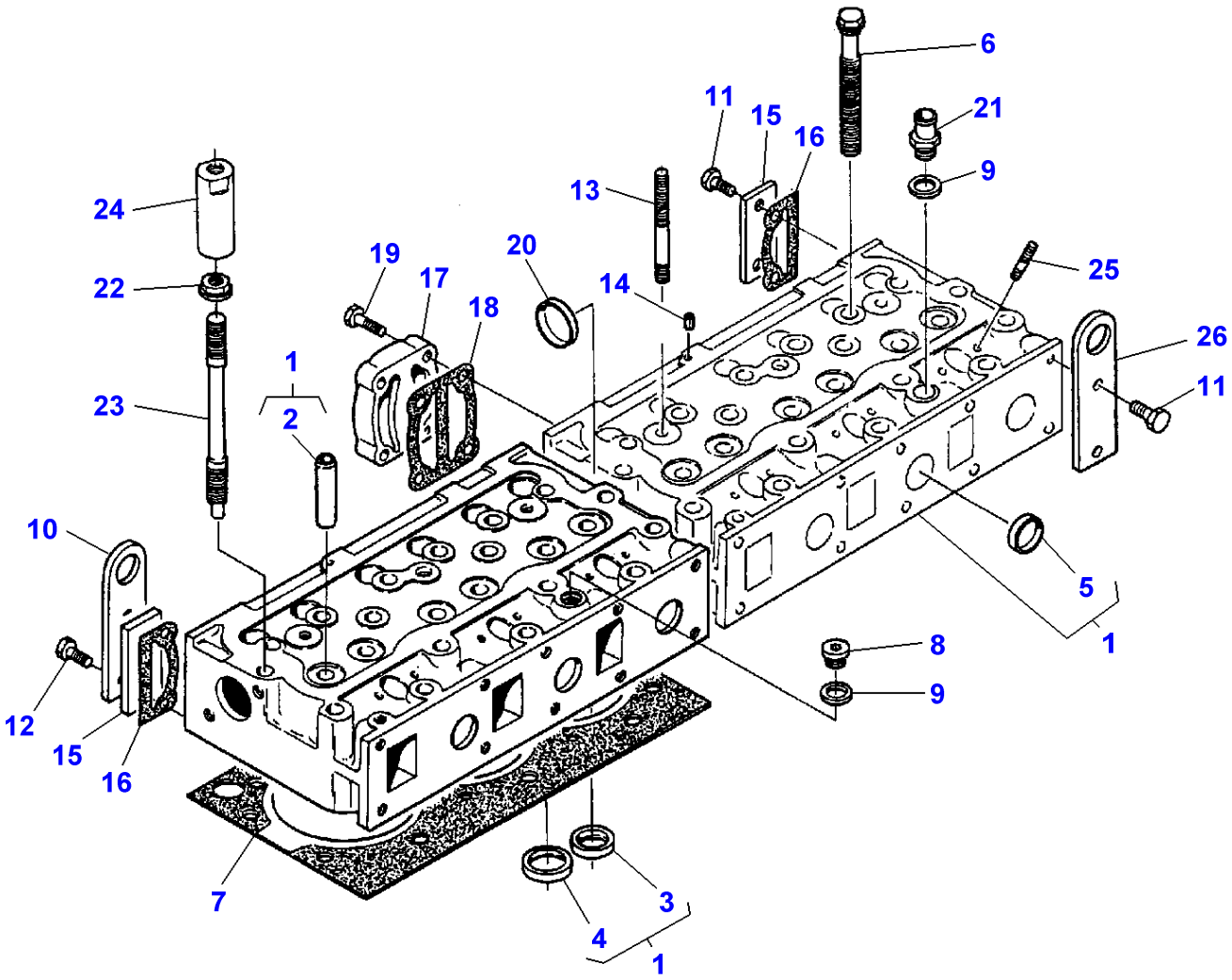
6
11
15
16
21
9
13
24
19
20
17
14
25
22
18
26
1
11
23
2
10
5
1
8
9
12
15
16
7
3
4
1

| Item | Part Number | Qty | Description | Comments |
|---|---|---|---|---|
| 1 | V836640897 | 2 | Cylinder Head | |
| 2 | V836647601 | 6 | Guide | (1) |
| 3 | V836647600 | 3 | Pressure Valve | (1) |
| 4 | V836647936 | 3 | Valve Seat | (1) |
| 5 | V836647942 | 5 | Plug | (1) |
| 6 | V836859104 | 32 | Screw | |
| 7 | **V836855740** | 2 | Gasket | |
| 8 | V640325018 | 1 | Plug | |
| 9 | V615881822 | 2 | Seal | |
| 10 | V836859722 | 2 | Plate | Replace and repair. Old not interchangeable with new V836855349 |
| 11 | V528801800 | 4 | Screw | M10X25 |
| 12 | V528801820 | 2 | Screw | M10X35 |
| 13 | V546801900 | 4 | Stud | M10X75 |
| 14 | V595953360 | 2 | Pin | |
| 15 | V836855350 | 2 | Plate | |
| 16 | V836855417 | 2 | Gasket | |
| 17 | V836855348 | 1 | Connector | |
| 18 | V836855418 | 1 | Gasket | |
| 19 | V528901830 | 4 | Screw | |
| 20 | V640016045 | 1 | Plug | |
| 21 | V836119837 | 1 | Union | |
| 22 | V836859110 | 2 | Nut | |
| 23 | V836859109 | 2 | Stud | |
| 24 | V836647835 | 2 | Nut Special | |
| 25 | V546901435 | 12 | Stud | M8X40 |
| 26 | V836859722 | 1 | Plate | Replace and repair. Old not interchangeable with new V836855349 |

1-LA08-605-B

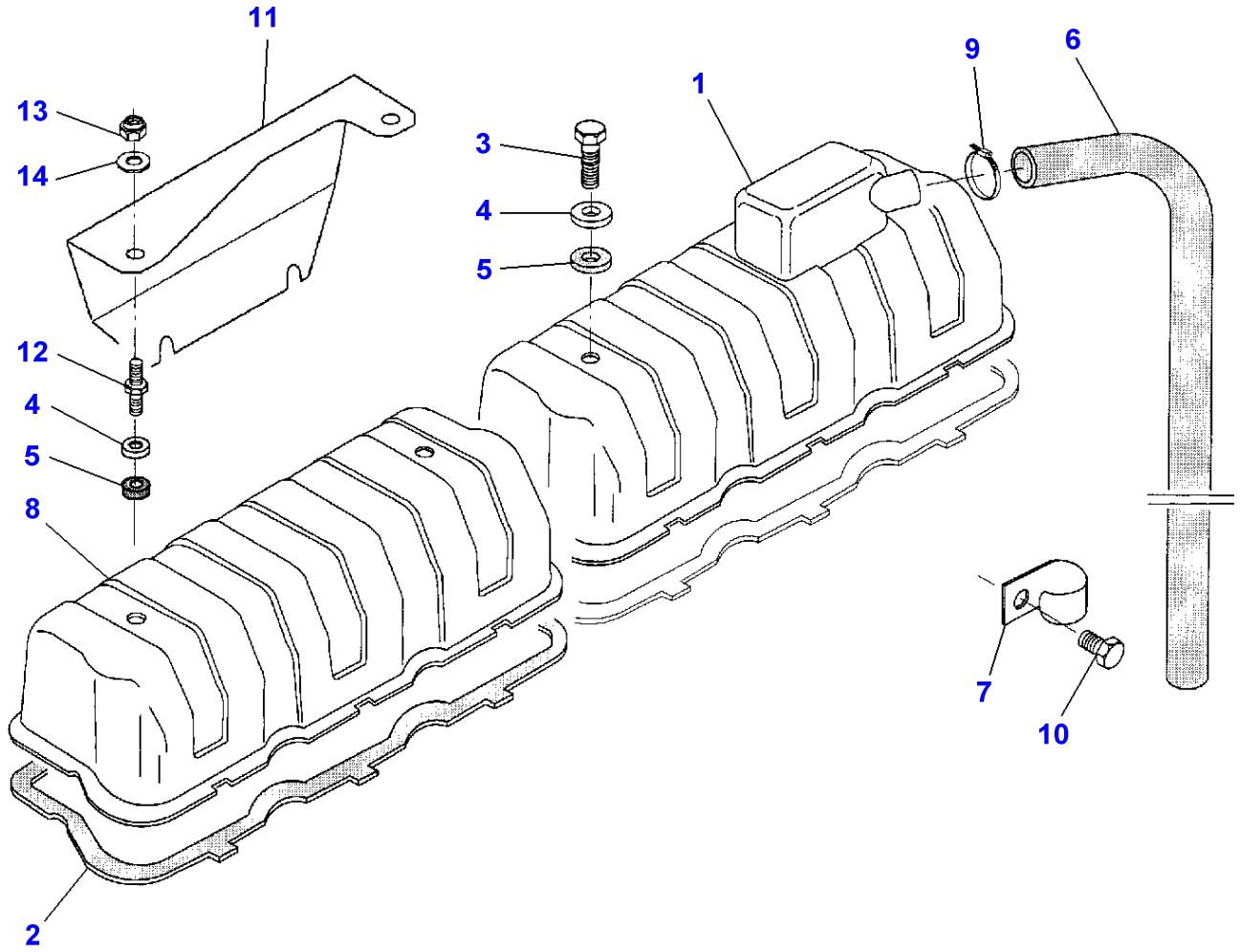

| Item | Part Number | Qty | Description | Comments |
|---|---|---|---|---|
| 1 | V836859501 | 1 | Valve Cover | |
| 2 | V836646360 | 2 | Gasket | |
| 3 | V528801780 | 4 | Screw | M10X20 |
| 4 | V836119855 | 4 | Washer | |
| 5 | V836012841 | 4 | Gasket | |
| 6 | V836659529 | 1 | Hose Flexible | |
| 7 | V836659539 | 1 | Band | |
| 8 | V836846448 | 1 | Valve Cover | |
| 9 | V651754720 | 1 | Band | |
| 10 | V528801740 | 1 | Screw | M10X10 |
| 11 | V836859843 | 1 | Fence | |
| 12 | V836659175 | 2 | Bolt | |
| 13 | V510601002 | 2 | Nut | |
| 14 | V500151050 | 2 | Washer | |

1-LA09-603-A

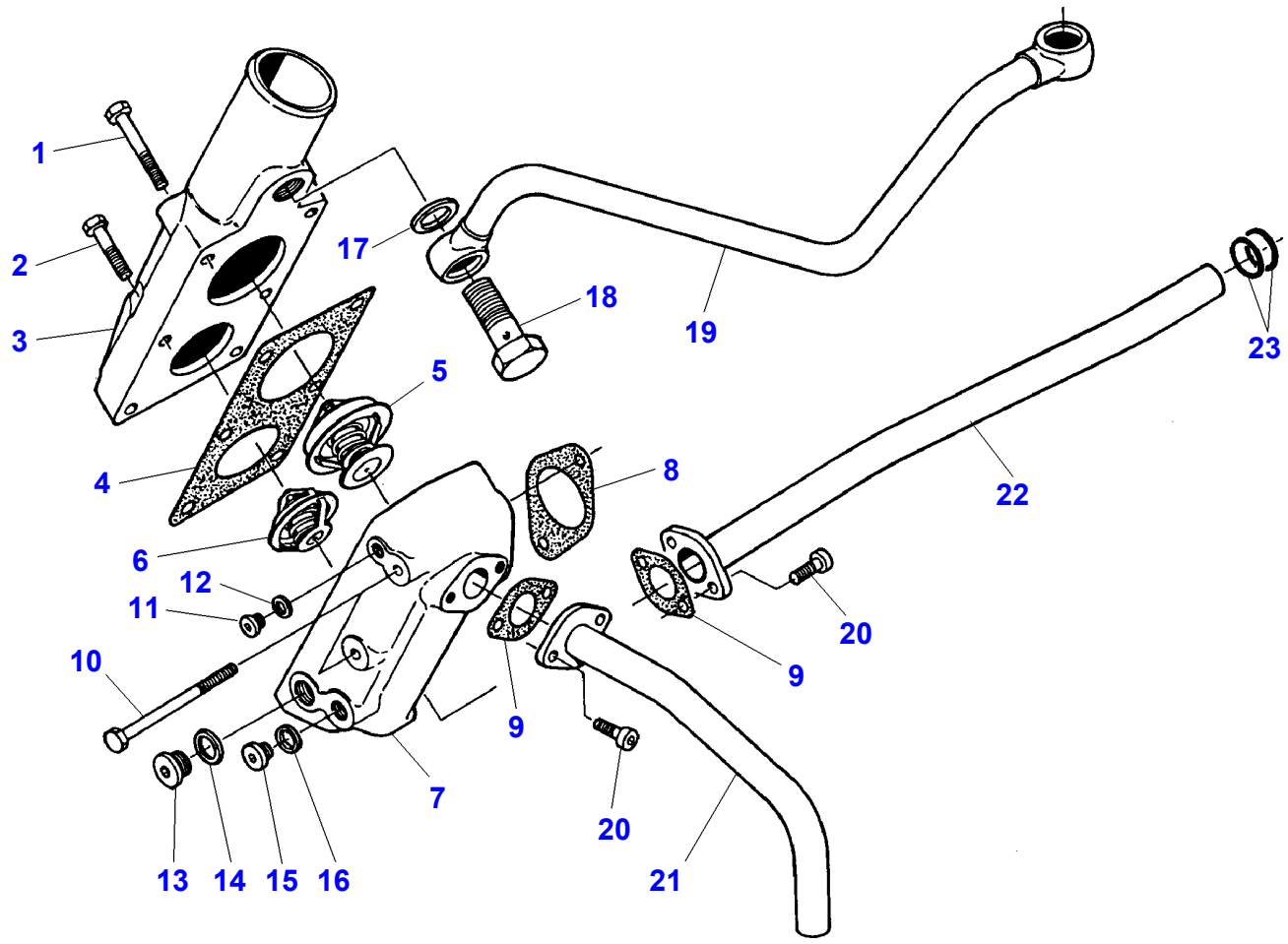

| Item | Part Number | Qty | Description | Comments |
|---|---|---|---|---|
| 1 | V529801470 | 2 | Screw | M8X60 |
| 2 | V529801430 | 4 | Screw | M8X40 |
| 3 | V836855777 | 1 | Pipe | |
| 4 | V836855603 | 1 | Gasket | |
| 5 | **V836352903** | 1 | Thermostat | [A] |
| 6 | **V836015156** | 1 | Thermostat | [B] |
| 7 | V836855601 | 1 | Housing | |
| 8 | V836646393 | 1 | Gasket | |
| 9 | V836322190 | 2 | Gasket | |
| 10 | V529801550 | 2 | Screw | M8X100 |
| 11 | V640325110 | 1 | Plug | |
| 12 | V615571014 | 1 | Seal | |
| 13 | V640325018 | 1 | Plug | |
| 14 | V615881822 | 1 | Seal | |
| 15 | V640325014 | 1 | Plug | |
| 16 | V615881418 | 1 | Seal | |
| 17 | V615882227 | 4 | Gasket | |
| 18 | V640435018 | 2 | Banjo Fitting | |
| 19 | V836859197 | 1 | Pipe | |
| 20 | V581804600 | 4 | Screw | M8X20 |
| 21 | V836855672 | 1 | Pipe | |
| 22 | V836855639 | 1 | Pipe | |
| 23 | V614602430 | 2 | O Ring | |

**FOOTNOTE [A]** OPENS AT 83 DEGREES
**FOOTNOTE [B]** OPENS AT 79 DEGREES

1-LA10-604-A

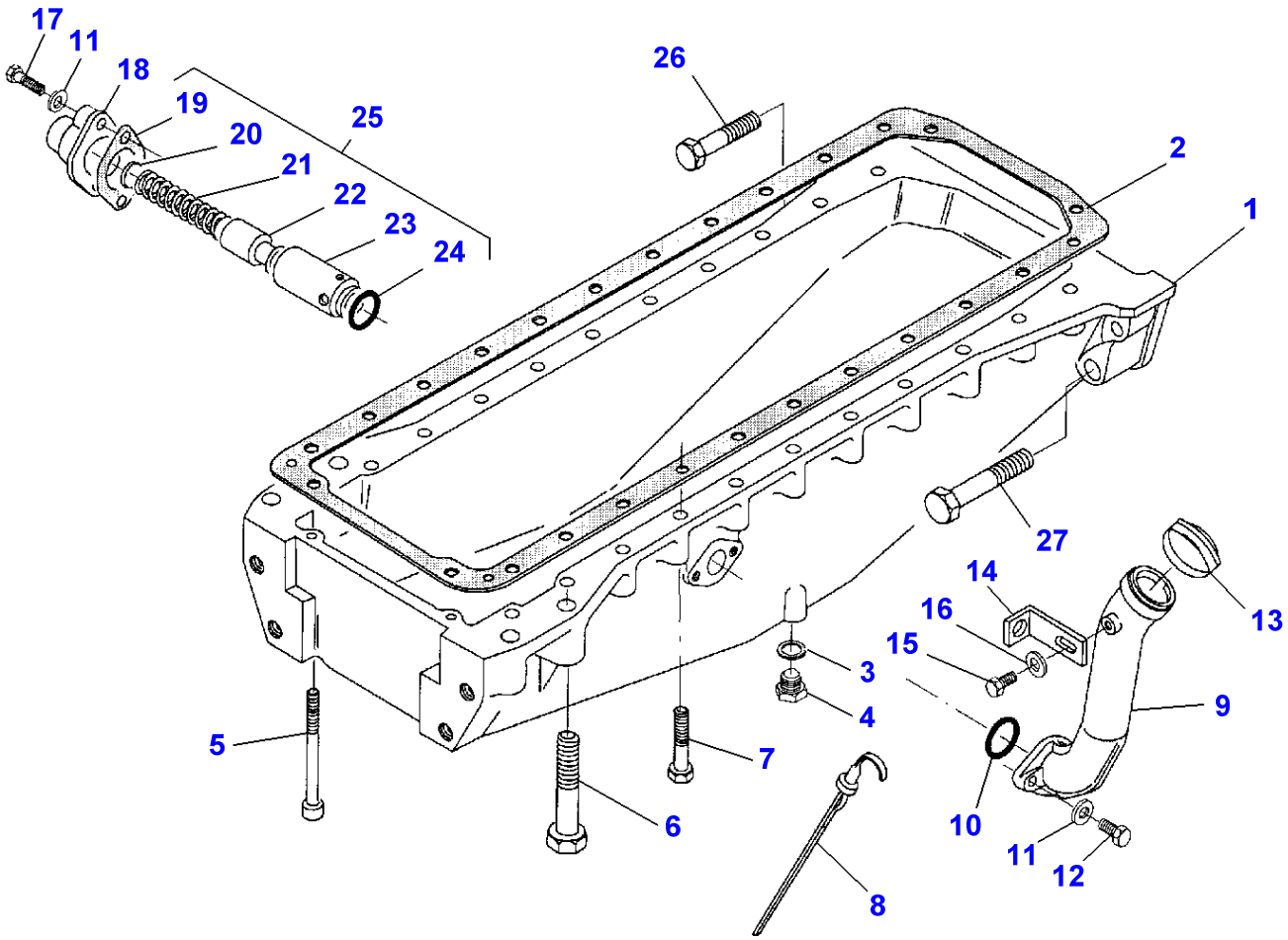

| Item | Part Number | Qty | Description | Comments |
|---|---|---|---|---|
| 1 | V836852518 | 1 | Housing | |
| 2 | V836322183 | 1 | Gasket | |
| 3 | V836655490 | 1 | Seal | M16 |
| | V615881827 | 1 | Seal | M18 |
| 4 | V836655492 | 1 | Plug | M16 |
| | V836655493 | 1 | Plug | M18 |
| 5 | V581704830 | 2 | Screw | M8X160 |
| 6 | V529903990 | 4 | Screw | M20X140 |
| 7 | V529701880 | 22 | Screw | M10X65 |
| 8 | V836855747 | 1 | Dipstick | |
| 9 | V836855400 | 1 | Breather | |
| 10 | V614603230 | 1 | O Ring | |
| 11 | V500950800 | 4 | Washer | |
| 12 | V528801380 | 2 | Screw | M8X20 |
| 13 | V836659697 | 1 | Cap | |
| 14 | V836859004 | 1 | Angle | |
| 15 | V528801360 | 1 | Screw | M8X16 |
| 16 | V500150842 | 1 | Washer | |
| 17 | V528801420 | 2 | Screw | M8X35 |
| 18 | V836129849 | 1 | Cover | |
| 19 | V836322190 | 1 | Gasket | (25) |
| 20 | V836020290 | 1 | Washer | (25) |
| 21 | V836655246 | 1 | Spring | (25) |
| 22 | V836338850 | 1 | Piston | (25) |
| 23 | V836117834 | 1 | Cylinder | (25) |
| 24 | V614601524 | 1 | O Ring | (25) |
| 25 | V836840851 | 1 | Control Valve | |
| 26 | V529803090 | 2 | Screw | M16X70 |
| 27 | V529804330 | 2 | Screw | M22X90 |

1-LA11-604-B

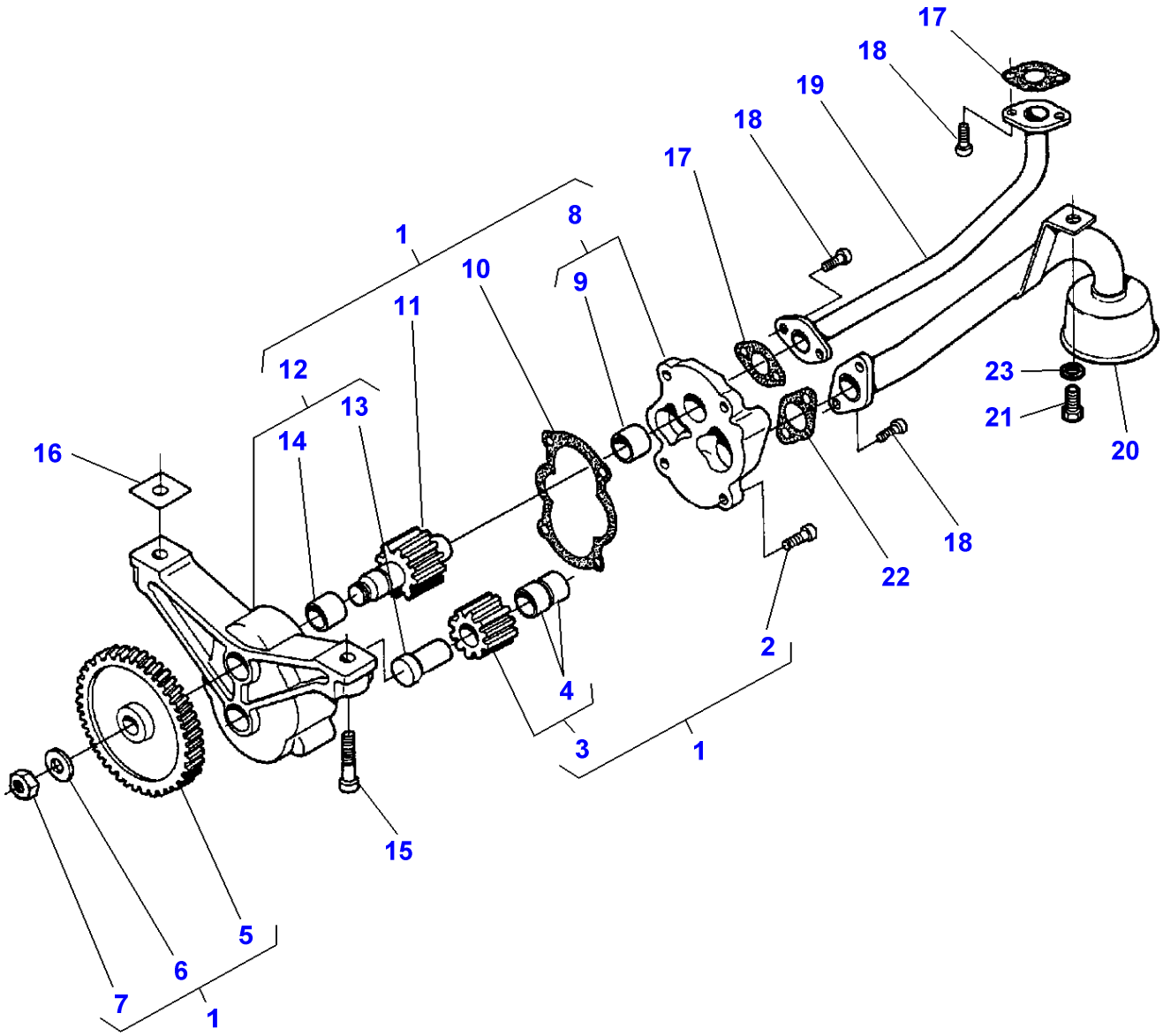

| Item | Part Number | Qty | Description | Comments |
|---|---|---|---|---|
| 1 | V836855300 | 1 | Oil Pump | |
| 2 | V528801380 | 4 | Screw | (1) M8X20 |
| 3 | V836338180 | 1 | Gear | (1) |
| 4 | V836322909 | 2 | Bush | (3) |
| 5 | V836338667 | 1 | Gear | (1) |
| 6 | V836122910 | 1 | Washer | (1) |
| 7 | V504861000 | 1 | Nut | (1) |
| 8 | V836855297 | 1 | Cover | (1) |
| 9 | V836322909 | 1 | Bush | (8) |
| 10 | V836338188 | 1 | Gasket | (1) |
| 11 | V836338182 | 1 | Gear | (1) |
| 12 | V836338186 | 1 | Frame | (1) |
| 13 | V836322906 | 1 | Shaft | (12) |
| 14 | V836322909 | 1 | Bush | (12) |
| 15 | V581805050 | 2 | Screw | M10X40 |
| 16 | V836007871 | X | Shim | |
| 17 | V836008449 | 2 | Gasket | |
| 18 | V581804600 | 6 | Screw | M8X20 |
| 19 | V836855673 | 1 | Pipe | |
| 20 | V836855674 | 1 | Strainer | |
| 21 | V528801360 | 1 | Screw | M8X16 |
| 22 | V836338201 | 1 | Gasket | |
| 23 | V500150840 | 1 | Washer | |

1-LA12-604-A

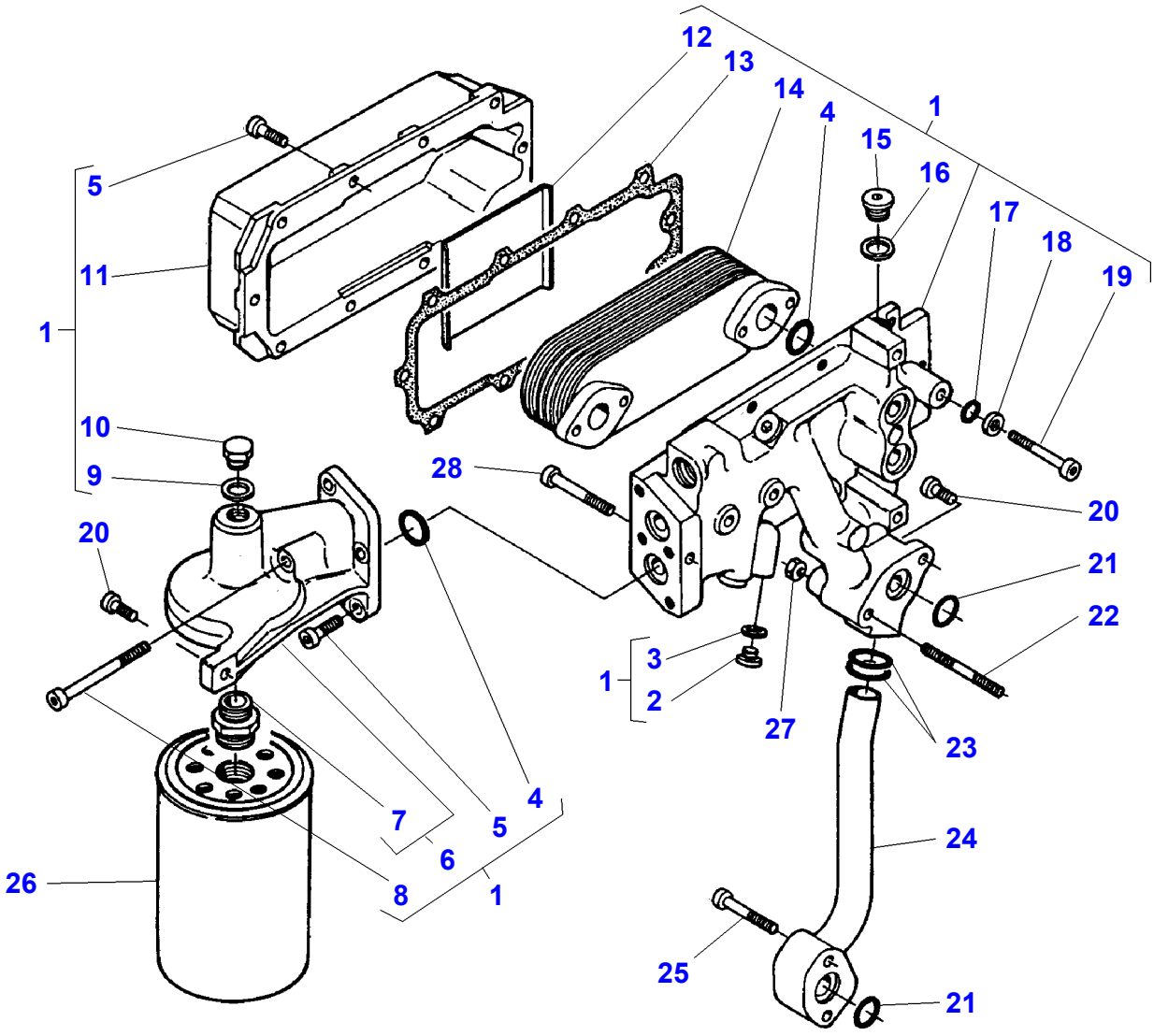
12
13
14
4
1
15
16
17
18
19
5
11
1
10
9
28
20
20
21
22
3
1
2
27
23
4
7
5
6
8
1
24
26
25
21

| Item | Part Number | Qty | Description | Comments |
|---|---|---|---|---|
| 1 | V836859182 | 1 | Oil Cooler | |
| 2 | V640305012 | 1 | Plug | (1) |
| 3 | V615881216 | 1 | Gasket | (1) |
| 4 | V614602030 | 4 | O Ring | (1) |
| 5 | V581804620 | 13 | Screw | (1) M8X25 |
| 6 | V836859187 | 1 | Filter Head | (1) |
| 7 | V836859105 | 1 | Nipple | (6) |
| 8 | V581804730 | 1 | Screw | (1) M8X80 |
| 9 | V615881620 | 1 | Seal | (1) |
| 10 | V836119079 | 1 | Plug | (1) |
| 11 | V836855519 | 1 | Housing | (1) |
| 12 | V836855521 | 1 | Guide | (1) |
| 13 | V836855520 | 1 | Gasket | (1) |
| 14 | **V836855484** | 1 | Element | (1) |
| 15 | V640325018 | 3 | Plug | (1) |
| 16 | V615881822 | 3 | Seal | (1) |
| 17 | V614600724 | 4 | O Ring | (1) |
| 18 | V836855517 | 4 | Washer | (1) |
| 19 | V581804690 | 4 | Screw | (1) M8X60 |
| 20 | V581804620 | 2 | Screw | M8X25 |
| 21 | V614602030 | 3 | O Ring | |
| 22 | V546801490 | 2 | Bolt | M8X70 |
| 23 | V614602430 | 2 | O Ring | |
| 24 | V836859134 | 1 | Pipe | |
| 25 | V529801460 | 2 | Screw | M8X55 |
| 26 | **V836859108** | 1 | Oil Filter | |
| 27 | V504800800 | 2 | Nut | |
| 28 | V581804690 | 2 | Screw | M8X60 |

1-LA45-001-A

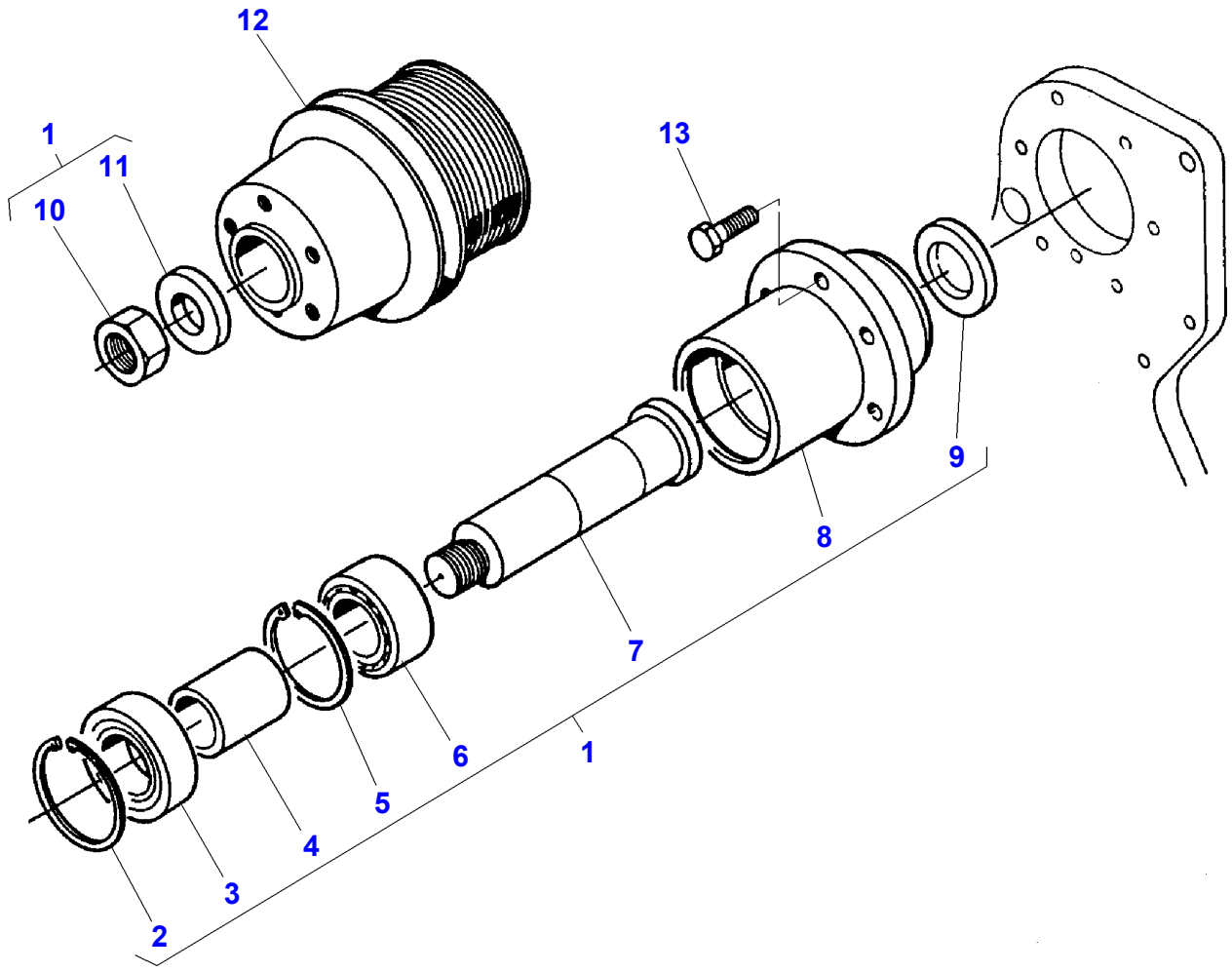

| Item | Part Number | Qty | Description | Comments |
|---|---|---|---|---|
| 1 | V836859119 | 1 | Kit, Shaft | |
| 2 | V617330072 | 1 | Circlip | (1) |
| 3 | V610063064 | 1 | Bearing Assy | (1) |
| 4 | V836859122 | 1 | Sleeve | (1) |
| 5 | V617350062 | 1 | Circlip | (1) |
| 6 | V610032060 | 1 | Bearing Assy | (1) |
| 7 | V836859121 | 1 | Shaft | (1) |
| 8 | V836859120 | 1 | Hub | (1) |
| 9 | V836529872 | 1 | Plug | (1) |
| 10 | V504602002 | 1 | Nut | (1) |
| 11 | V836855756 | 1 | Washer | (1) |
| 12 | V836859686 | 1 | Pulley | |
| 13 | V528801810 | 6 | Screw | |

1-LA13-604-A

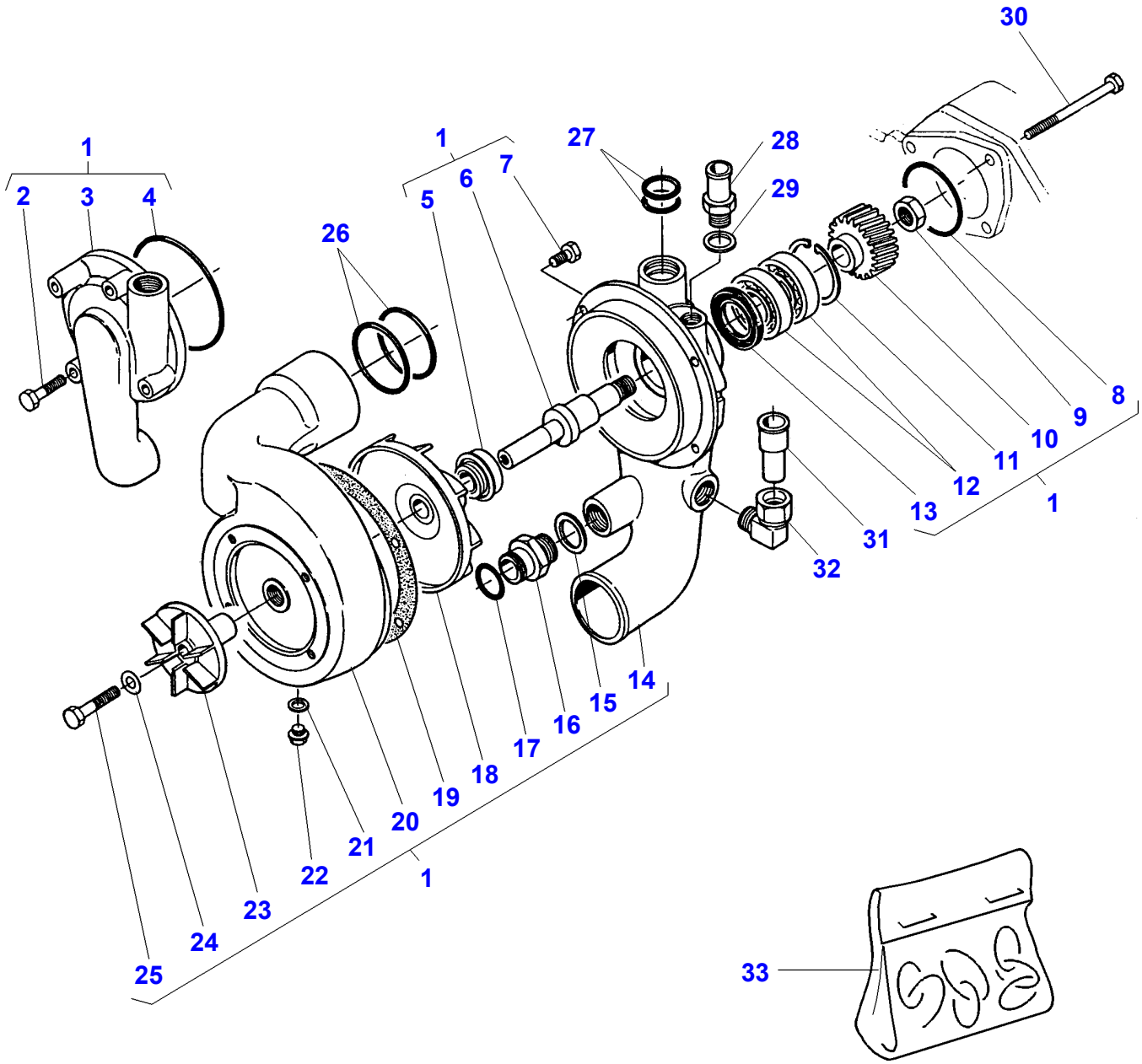
1
2
3
4
1
5
6
7
26
27
28
29
30
8
9
10
11
12
13
1
31
32
14
15
16
17
18
19
20
21
22
1
23
24
25
33

| Item | Part Number | Qty | Description | Comments |
|---|---|---|---|---|
| 1 | V836859168 | 1 | Water Pump | |
| 2 | V528801420 | 4 | Screw | (1) M8X35 |
| 3 | V836859111 | 1 | Housing | (1) |
| 4 | V614608930 | 1 | O Ring | (1) |
| 5 | V836859452 | 1 | Gasket | (1) |
| 6 | V836859456 | 1 | Shaft | (1) |
| 7 | V528801362 | 4 | Screw | (1) M8X16 |
| 8 | V614606230 | 1 | O Ring | (1) |
| 9 | V504601600 | 1 | Nut | (1) |
| 10 | V836855569 | 1 | Gear | (1) |
| 11 | V617330052 | 1 | Circlip | (1) |
| 12 | V610072050 | 2 | Bearing Assy | (1) |
| 13 | V614103247 | 1 | Gasket | (1) |
| 14 | V836859458 | 1 | Body | (1) |
| 15 | V615892631 | 1 | Seal | (1) |
| 16 | V836859118 | 1 | Union | (1) |
| 17 | V614602324 | 1 | O Ring | (1) |
| 18 | V836855948 | 1 | Impeller | (1) |
| 19 | V836855625 | 1 | Gasket | (1) |
| 20 | V836859170 | 1 | Housing | (1) |
| 21 | V615881216 | 1 | Gasket | (1) |
| 22 | V640305012 | 1 | Plug | (1) |
| 23 | V836859167 | 1 | Turbine | (1) |
| 24 | V500050842 | 1 | Washer | (1) |
| 25 | V529401440 | 1 | Screw | (1) |
| 26 | V614604958 | 2 | O Ring | |
| 27 | V614602430 | 2 | O Ring | |
| 28 | V836119837 | 1 | Union | |
| 29 | V615881822 | 1 | Seal | |
| 30 | V529801530 | 3 | Screw | M8X90 |
| 31 | V836859169 | 1 | Tube | |
| 32 | V641176018 | 1 | Union | |
| 33 | V836840988 | 1 | Kit, Repair | |

1-LA14-610-A

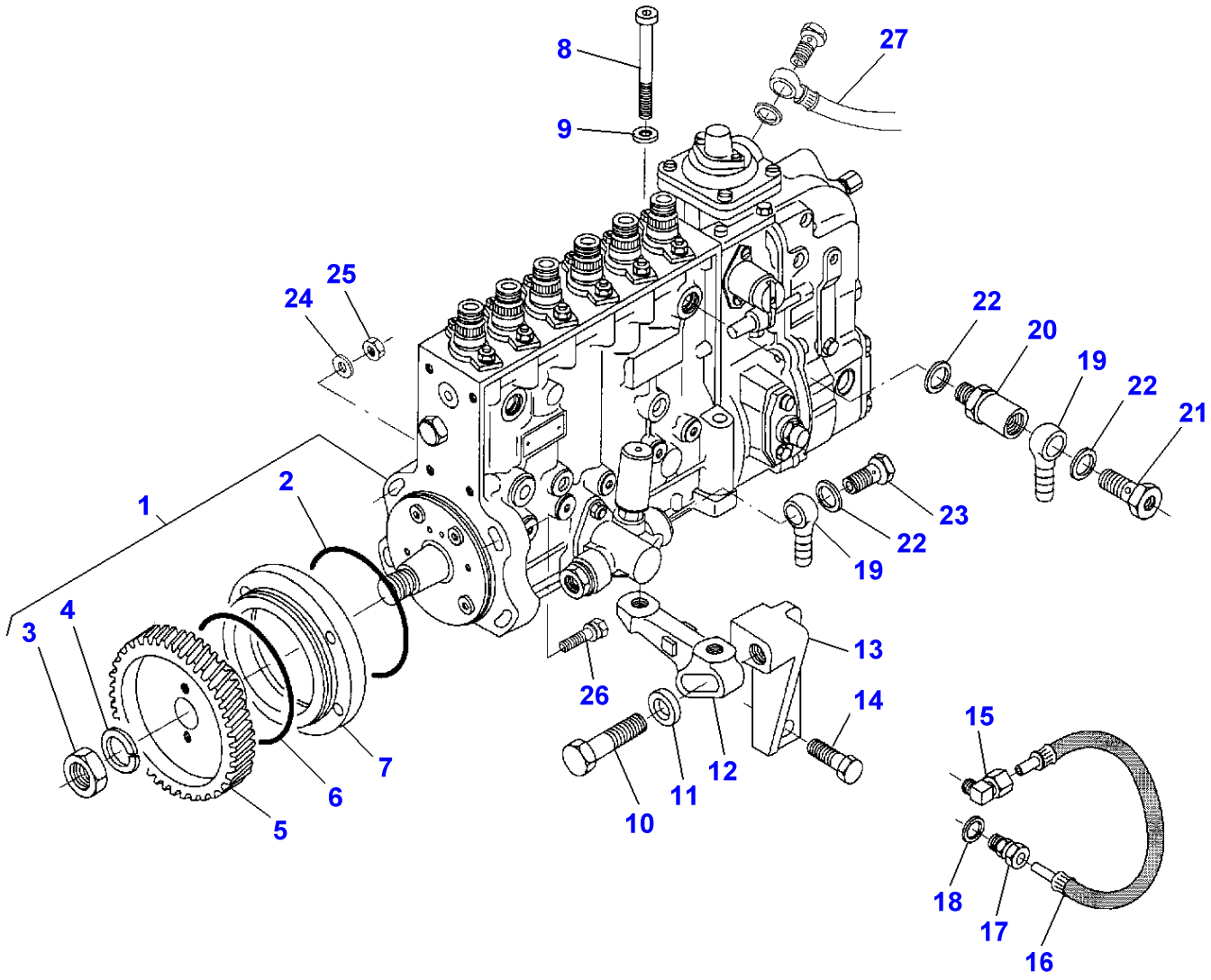
8
27
9
25
24
22
20
19
22
21
1
2
23
22
19
4
3
13
26
14
15
12
11
10
7
6
5
18
17
16

| Item | Part Number | Qty | Description | Comments |
|---|---|---|---|---|
| 1 | V836354708 | 1 | Injection Pump | |
| 2 | V614609930 | 1 | O Ring | (1) |
| 3 | V505612000 | 1 | Nut | (1) |
| 4 | V500452000 | 1 | Washer | (1) |
| 5 | V836855986 | 1 | Gear | |
| 6 | V614609930 | 1 | O Ring | |
| 7 | V836855996 | 1 | Ring | |
| 8 | V581805150 | 2 | Screw | M10X90 |
| 9 | V500151050 | 2 | Washer | |
| 10 | V529803072 | 1 | Screw | M16X60 |
| 11 | V836655994 | 1 | Washer | |
| 12 | V836855987 | 1 | Support | |
| 13 | V836855993 | 1 | Support | |
| 14 | V528802632 | 2 | Screw | M14X40 |
| 15 | V641166006 | 1 | Elbow Nipple | |
| 16 | V836120491 | 1 | Pipe,Oil | |
| 17 | V641086006 | 1 | Connection | |
| 18 | V615871014 | 1 | O Ring | |
| 19 | V640255210 | 2 | Pipe | |
| 20 | V836330959 | 1 | Valve | |
| 21 | V836007420 | 1 | Screw | |
| 22 | V615881420 | 3 | Gasket | |
| 23 | V640435010 | 1 | Screw | |
| 24 | V500051052 | 4 | Washer | |
| 25 | V504801002 | 4 | Nut | |
| 26 | V836659346 | 1 | Screw | |
| 27 | | 1 | Exhaust Pipe | See Page - Reference Number 010-0125/17 |

1-LA25-602-B

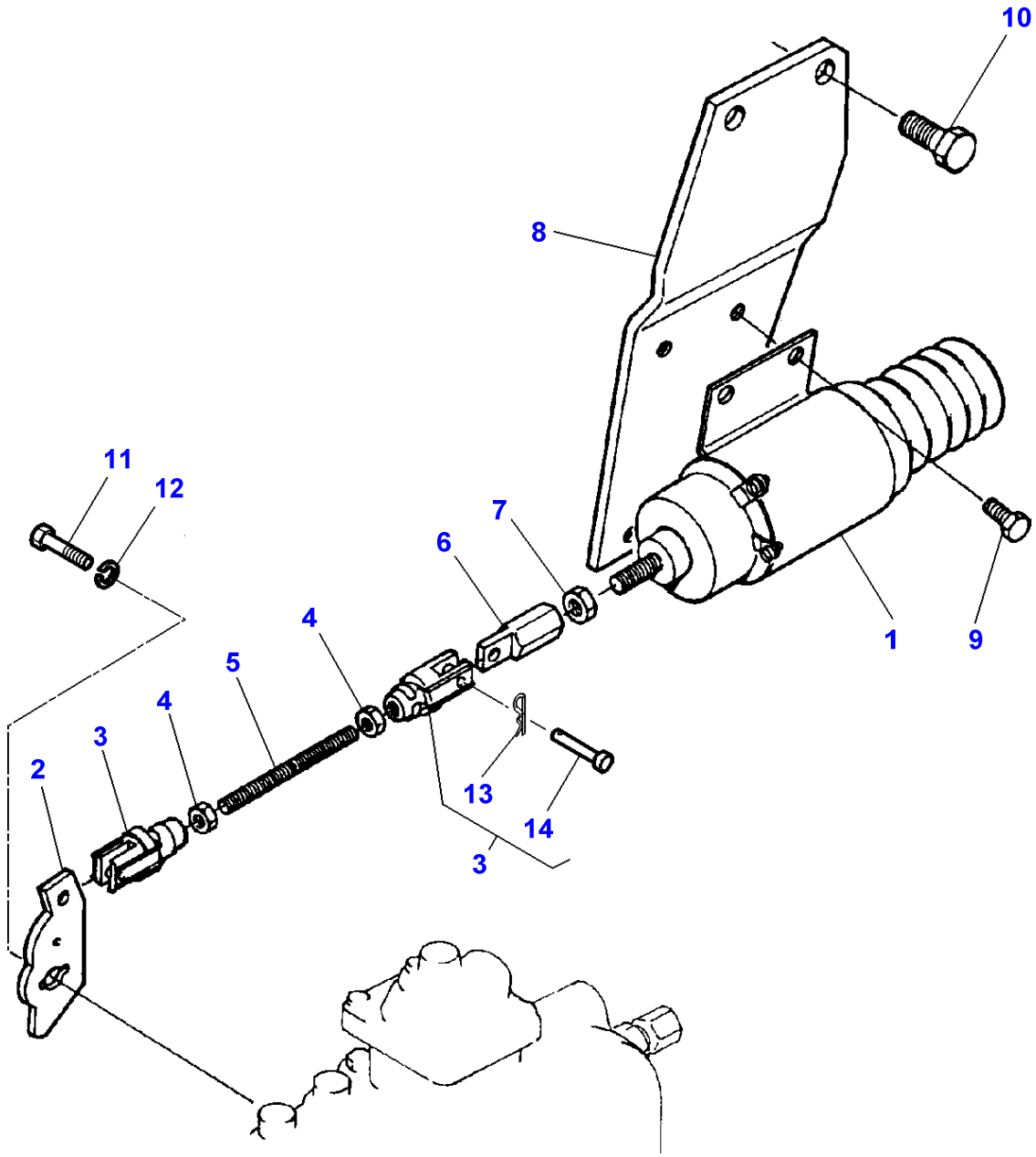

| Item | Part Number | Qty | Description | Comments |
|---|---|---|---|---|
| 1 | **V836640941** | 1 | Solenoid | |
| 2 | V835347344 | 1 | Lever | |
| 3 | V835339319 | 2 | Fork | |
| 4 | V504600502 | 2 | Nut | |
| 5 | V836859052 | 1 | Stem | |
| 6 | V836346773 | 1 | Clevis | |
| 7 | V504600602 | 1 | Nut | |
| 8 | V836859051 | 1 | Support | |
| 9 | V528801062 | 4 | Bolt | |
| 10 | V528801782 | 2 | Screw | M10X20 |
| 11 | V528801062 | 1 | Bolt | |
| 12 | V500450602 | 1 | Washer | |
| 13 | | 1 | Pin | (3)<br>Not serviced,order REF 3 |
| 14 | | 1 | Clevis Pin | (3)<br>Not serviced,order REF 3 |

1-LA15-602-A

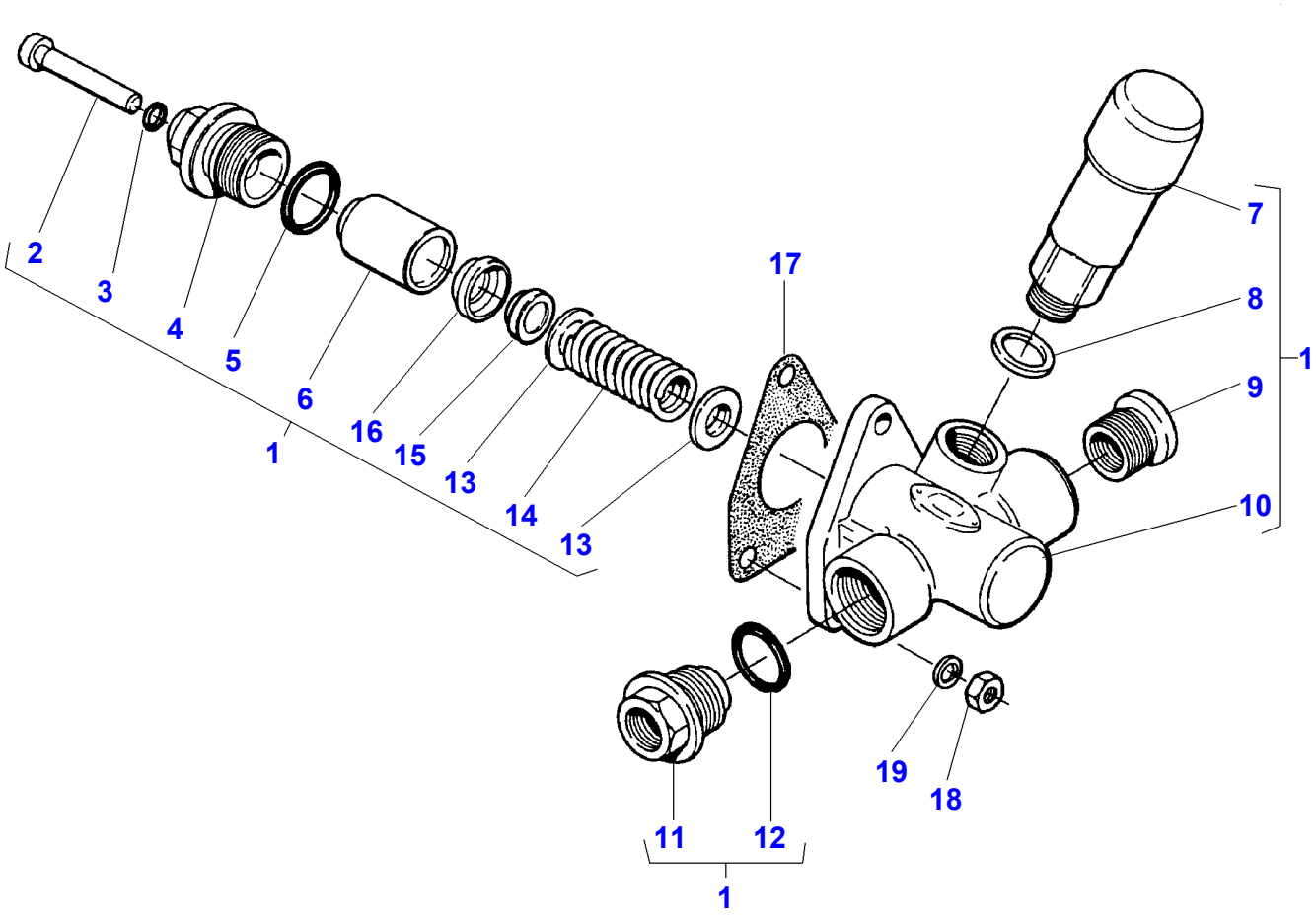

| Item | Part Number | Qty | Description | Comments |
|---|---|---|---|---|
| 1 | V836340066 | 1 | Pump | |
| 2 | V836340068 | 1 | Clevis Pin | (1) |
| 3 | V836139015 | 1 | O Ring | (1) |
| 4 | V836340069 | 1 | Body | (1) |
| 5 | V835339876 | 1 | O Ring | (1) |
| 6 | V835339877 | 1 | Plunger | (1) |
| 7 | V835339884 | 1 | Pump | (1) |
| 8 | V615881620 | 1 | Seal | (1) |
| 9 | V836340067 | 1 | Union | (1) |
| 10 | | 1 | Housing | (1) Not serviced,order REF. 1 |
| 11 | V835340971 | 1 | Union | (1) |
| 12 | V835340972 | 1 | O Ring | (1) |
| 13 | V835339879 | 2 | Washer | (1) |
| 14 | V835339878 | 1 | Spring | (1) |
| 15 | V835339880 | 1 | Pressure Valve | (1) |
| 16 | V835339882 | 1 | Gasket | (1) |
| 17 | V836329194 | 1 | Gasket | |
| 18 | V504600602 | 3 | Nut | |
| 19 | V500450602 | 3 | Washer | |

1-LA16-607-A

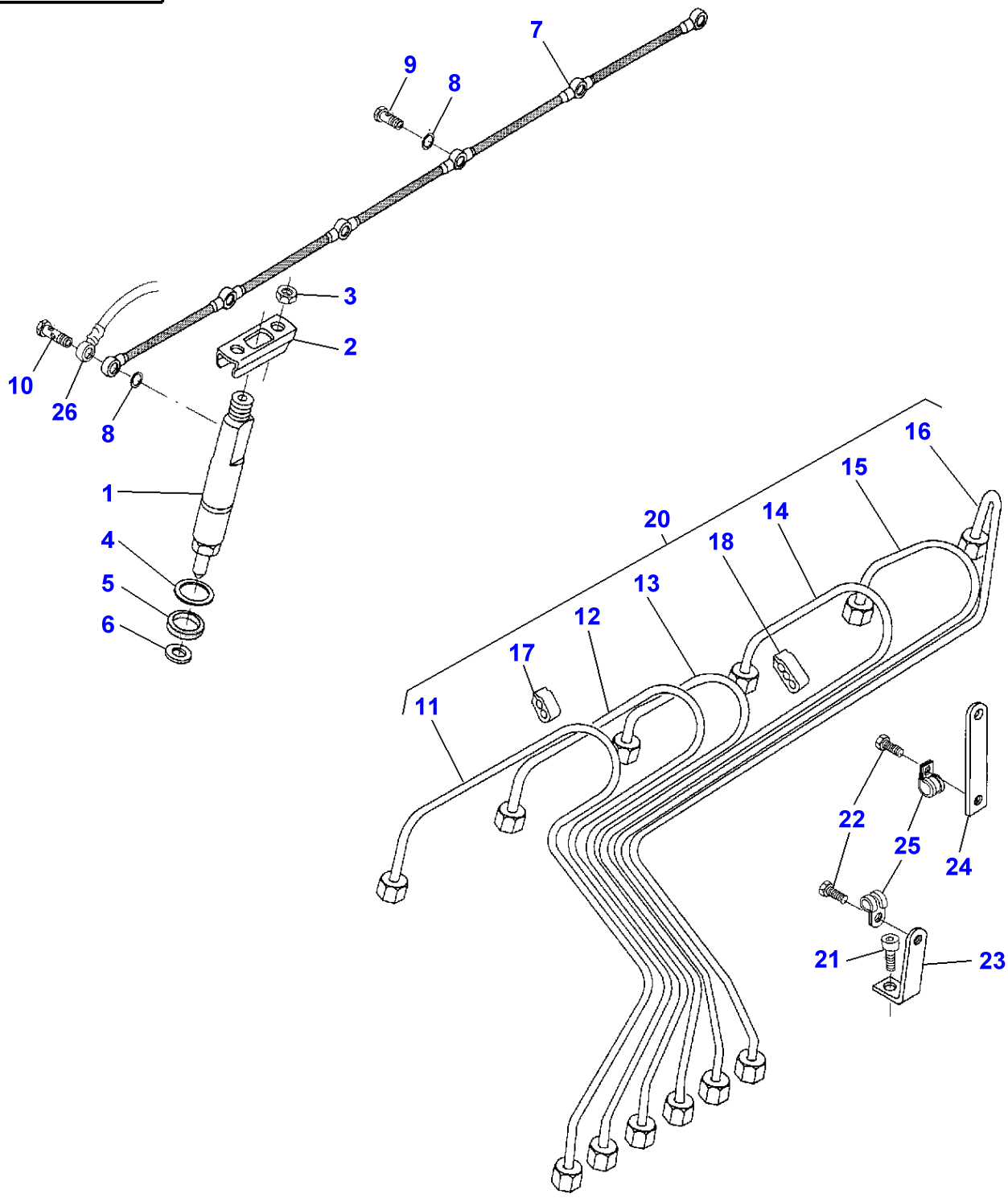

| Item | Part Number | Qty | Description | Comments |
|---|---|---|---|---|
| 1 | V836354615 | 6 | Atomiser | |
| 2 | V835331103 | 6 | Retainer | |
| 3 | V504800800 | 12 | Nut | |
| 4 | V836652170 | 6 | Washer | |
| 5 | V835336276 | 6 | Seal | |
| 6 | V899901495 | 6 | Washer | |
| 7 | V836847522 | 1 | Pipe | |
| 8 | V615870710 | 13 | Seal | |
| 9 | V835331289 | 5 | Screw | |
| 10 | V835336943 | 1 | Screw | |
| 11 | V836859401 | 1 | Injection Pipe | (20) CYL. NO 1 |
| 12 | V836859402 | 1 | Injection Pipe | (20) CYL. NO 2 |
| 13 | V836859403 | 1 | Injection Pipe | (20) CYL. NO 3 |
| 14 | V836859404 | 1 | Injection Pipe | (20) CYL. NO 4 |
| 15 | V836859405 | 1 | Injection Pipe | (20) CYL. NO 5 |
| 16 | V836859406 | 1 | Injection Pipe | (20) CYL. NO 6 |
| 17 | V836640097 | 1 | Clamp | (20) |
| 18 | V836640095 | 2 | Clamp | (20) |
| 19 | V836640094 | 2 | Clamp | (20) |
| 20 | V836855990 | 1 | Pipe Pack | |
| 21 | V528801360 | 1 | Screw | M8X16 |
| 22 | V528800752 | 2 | Screw | M5X12 |
| 23 | V836859726 | 1 | Support | |
| 24 | V836859727 | 1 | Support | |
| 25 | V602070605 | 2 | Band | |
| 26 | | 1 | Exhaust Pipe | See Page - Reference Number 010-0135/10 |

1-LA17-604-A

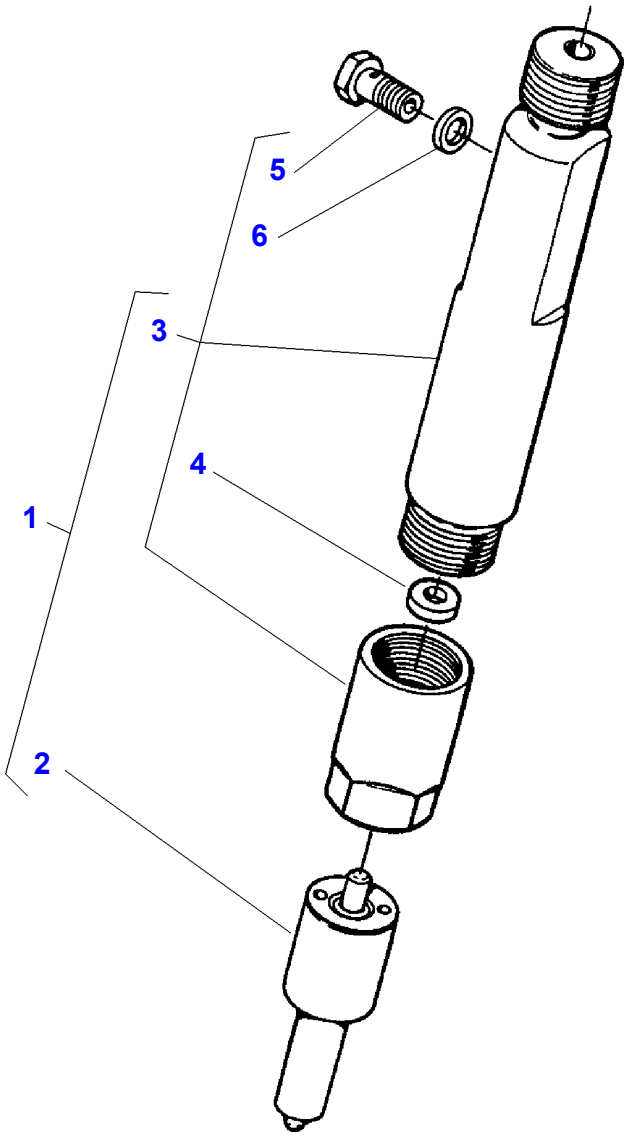

| Item | Part Number | Qty | Description | Comments |
|---|---|---|---|---|
| 1 | V836354615 | 1 | Atomiser | |
| 2 | V836354611 | 1 | Nozzle | (1) |
| 3 | | 1 | Atomiser Body | (1)<br>Not serviced,order REF. 1 |
| 4 | V836340907 | X | Chock | (3)<br>Thickness 1 MM |
| | V836340908 | X | Chock | (3)<br>Thickness 1,02MM |
| | V836340909 | X | Chock | (3)<br>Thickness 1,04MM |
| | V836340910 | X | Chock | (3)<br>Thickness 1,06MM |
| | V836340911 | X | Chock | (3)<br>Thickness 1,08MM |
| | V836340912 | X | Chock | (3)<br>Thickness 1,10MM |
| | V836340913 | X | Chock | (3)<br>Thickness 1,12MM |
| | V836340914 | X | Chock | (3)<br>Thickness 1,14MM |
| | V836340915 | X | Chock | (3)<br>Thickness 1,16MM |
| | V836340916 | X | Chock | (3)<br>Thickness 1,18MM |
| | V836340917 | X | Chock | (3)<br>Thickness 1,20MM |
| | V836340918 | X | Chock | (3)<br>Thickness 1,26MM |
| | V836340919 | X | Chock | (3)<br>Thickness 1,30MM |
| | V836340920 | X | Chock | (3)<br>Thickness 1,40MM |
| | V836340921 | X | Chock | (3)<br>Thickness 1,90MM |
| | V836340922 | X | Chock | (3)<br>Thickness 1,92MM |
| | V836340923 | X | Chock | (3)<br>Thickness 1,94MM |
| | V836340924 | X | Chock | (3)<br>Thickness 1,96MM |
| | V836340925 | X | Chock | (3)<br>Thickness 1,98MM |
| 5 | V615870710 | 2 | Seal | (3) |
| 6 | V835331289 | 1 | Screw | (3) |

1-LA18-608-B

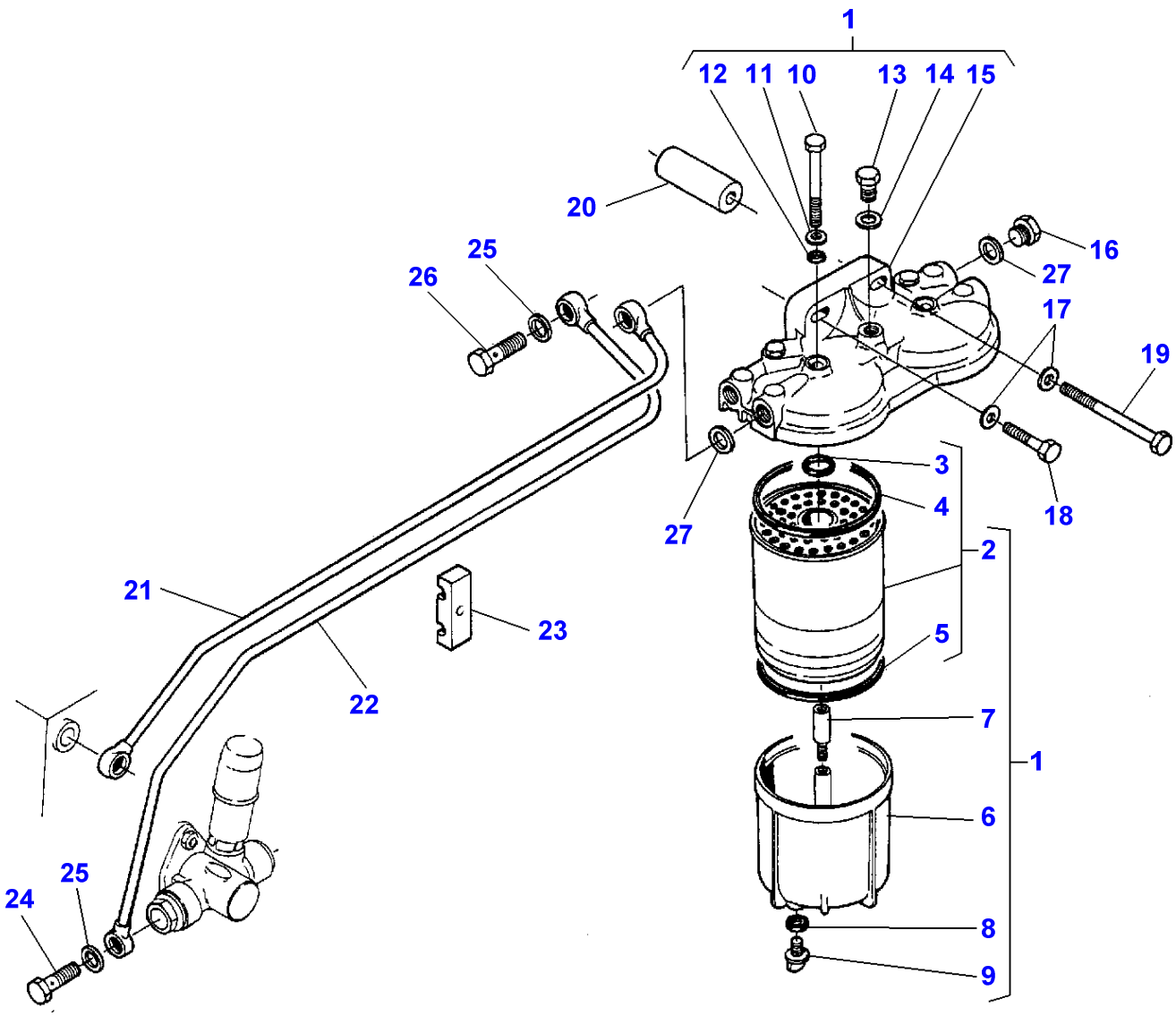
1
12
11
10
13
14
15
20
25
26
16
27
17
19
3
4
27
18
2
21
23
5
22
7
1
6
25
24
8
9

| Item | Part Number | Qty | Description | Comments |
|---|---|---|---|---|
| 1 | V836339370 | 1 | Fuel Filter | |
| 2 | **1896287M91** | 2 | Fuel Element | (1)<br>CAV<br>Alternative 3405419M1 |
| | **3405419M1** | 2 | Fuel Element | Alternative 1896287M91 |
| 3 | V836015142 | 1 | O Ring | (2) |
| 4 | V835330014 | 1 | Gasket | (2) |
| 5 | V835330015 | 1 | Gasket | (2) |
| 6 | V836340045 | 2 | Bowl | (1) |
| 7 | V836339372 | 2 | Stud | (1) |
| 8 | V836015147 | 2 | Gasket | (1) |
| 9 | V836015148 | 2 | Plug | (1) |
| 10 | V836015149 | 2 | Screw | (1) |
| 11 | V836015918 | 2 | Washer | (1) |
| 12 | V836015919 | 2 | O Ring | (1) |
| 13 | V836015958 | 1 | Plug | (1) |
| 14 | V615571014 | 1 | Seal | (1) |
| 15 | V836015959 | 1 | Cover | (1) |
| 16 | V836117323 | 2 | Plug | |
| 17 | V836120989 | 2 | Washer | |
| 18 | V528801420 | 1 | Screw | M8X35 |
| 19 | V529801550 | 1 | Screw | M8X100 |
| 20 | V836859009 | 1 | Spacer | |
| 21 | V836855989 | 1 | Exhaust Pipe | |
| 22 | V836855988 | 1 | Tube | |
| 23 | V836655527 | 2 | Band | |
| 24 | V640435010 | 2 | Screw | |
| 25 | V615881418 | 6 | Seal | |
| 26 | V836429560 | 2 | Screw | |
| 27 | V615581317 | 4 | Seal | |

1-LA19-609-A

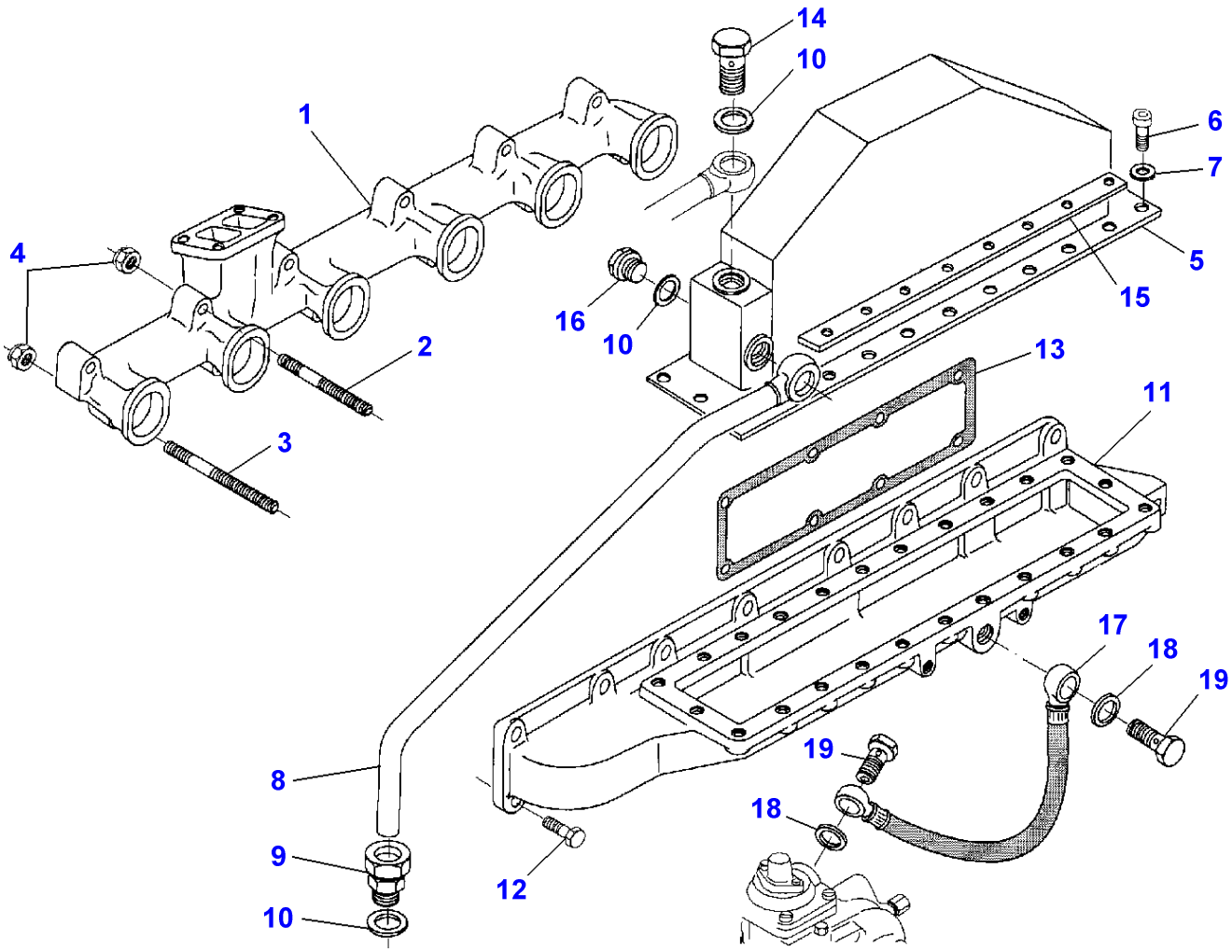

| Item | Part Number | Qty | Description | Comments |
|---|---|---|---|---|
| 1 | V836859378 | 1 | Exhaust Manifold | |
| 2 | V836855995 | 10 | Stud | M10X113 |
| 3 | V836859034 | 2 | Stud | M10X130 |
| 4 | V513601002 | 12 | Nut | |
| 5 | V836859178 | 1 | Intercooler | |
| 6 | V581804580 | 24 | Screw | M8X16 |
| 7 | V500150840 | 8 | Washer | |
| 8 | V836859196 | 1 | Tube | |
| 9 | V641086018 | 1 | Union | |
| 10 | V615882227 | 1 | Gasket | |
| 11 | V836855552 | 1 | Ind.Manifold | |
| 12 | V528801400 | 16 | Screw | M8X25 |
| 13 | V836847496 | 2 | Gasket | |
| 14 | V640435018 | 2 | Banjo Fitting | |
| 15 | V836859427 | 2 | Plate | |
| 16 | V640045022 | 1 | Plug | |
| 17 | V836659056 | 1 | Tube | |
| 18 | V615881216 | 4 | Gasket | |
| 19 | V640435008 | 2 | Screw | |

1-LA21-607-B

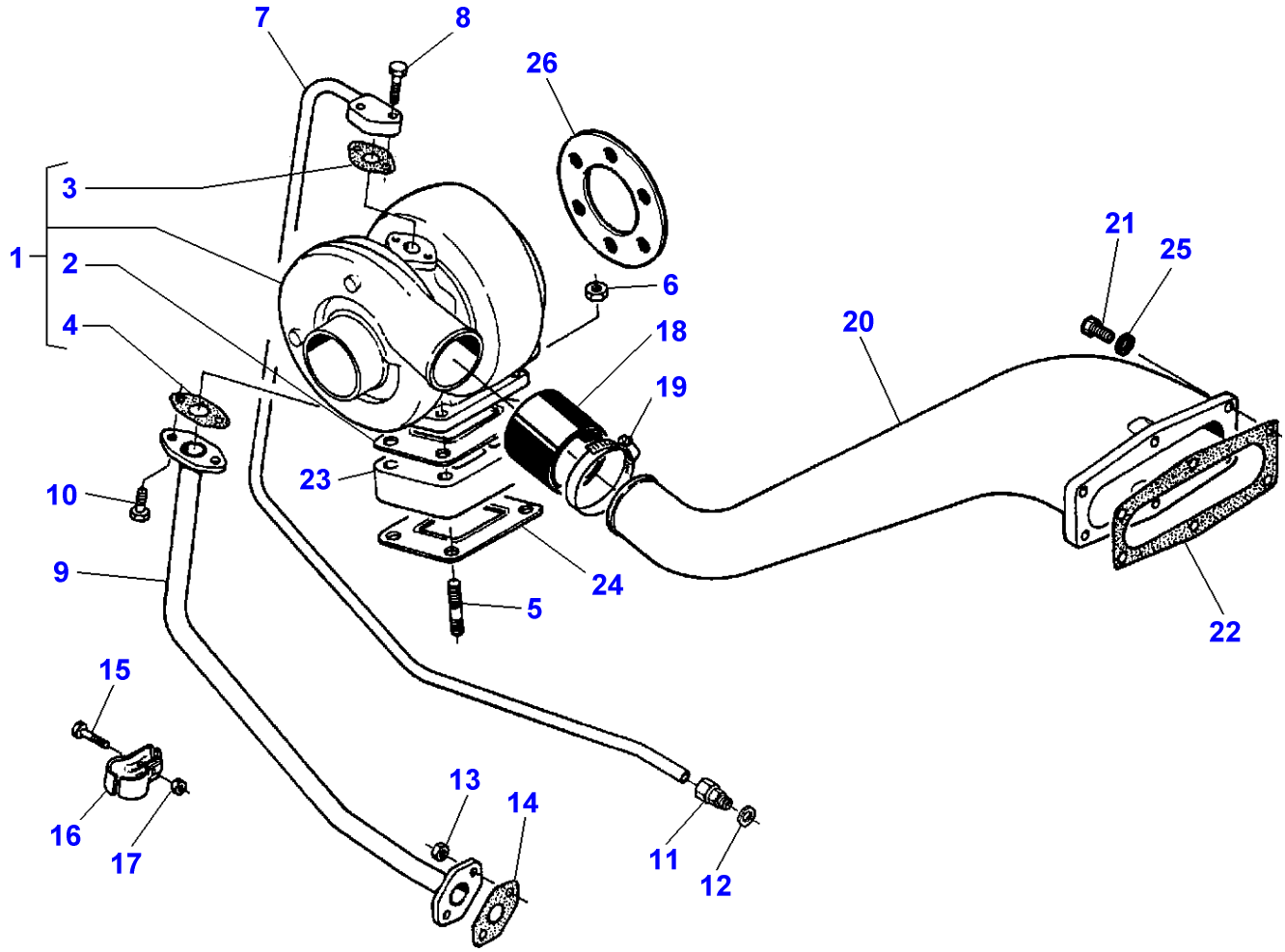

| Item | Part Number | Qty | Description | Comments |
|---|---|---|---|---|
| 1 | V836340799 | 1 | Turbocharger | |
| 2 | V836316726 | 1 | Gasket | (1) |
| 3 | V836308344 | 1 | Joint | (1) |
| 4 | V836324580 | 1 | Joint | (1) |
| 5 | V546801840 | 4 | Bolt | M10X45 |
| 6 | V521601000 | 4 | Nut | M10 |
| 7 | V836859493 | 1 | Exhaust Pipe | |
| 8 | V528801410 | 2 | Adjusting Screw | M8X30 |
| 9 | V836859117 | 1 | Tube | |
| 10 | V528801380 | 2 | Screw | M8X20 |
| 11 | V641086012 | 1 | Union | |
| 12 | V615881620 | 1 | Seal | |
| 13 | V504800800 | 2 | Nut | |
| 14 | V836324580 | 1 | Joint | |
| 15 | V529801112 | 1 | Screw | M6X30 |
| 16 | V835324324 | 2 | Bracket | |
| 17 | V504600602 | 1 | Nut | M6 |
| 18 | **V836128181** | 1 | Hose Flexible | |
| 19 | V602061668 | 2 | Clamp | |
| 20 | V836859195 | 1 | Exhaust Pipe | |
| 21 | V581804580 | 6 | Screw | M8X16 |
| 22 | V836855744 | 1 | Gasket | |
| 23 | V836855630 | 1 | Bridle | |
| 24 | V836316726 | 1 | Gasket | |
| 25 | V500950802 | 6 | Washer | |
| 26 | V836338985 | 1 | Gasket | |

1-LA22-610-A

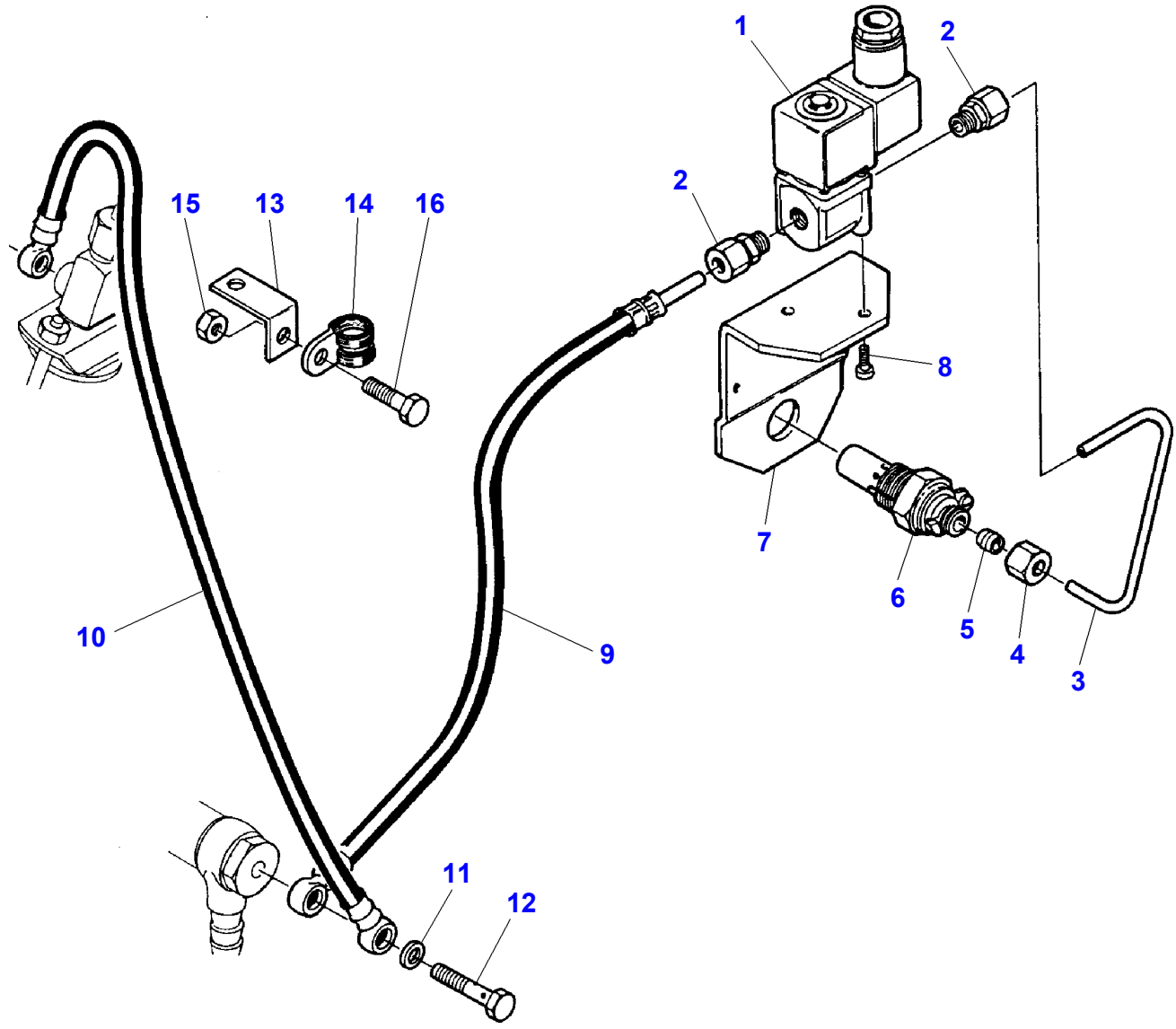

| Item | Part Number | Qty | Description | Comments |
|---|---|---|---|---|
| 1 | **V836659984** | 1 | Electrovalve | 12V<br>Replace and repair. Old not interchangeable with new V835339812 |
| 2 | V641046005 | 2 | Union | |
| 3 | V836752078 | 1 | Tube | Up to Serial or Engine Number H 16733<br>Diameter 4.76MM |
| | V836659975 | 1 | Pipe | From Serial or Engine Number H 16734<br>Diameter 5MM |
| 4 | V836017420 | 1 | Nut | Up to Serial or Engine Number H 16733 |
| | V836659943 | 1 | Nut | From Serial or Engine Number H 16734 |
| 5 | V836017421 | 1 | Olive | Up to Serial or Engine Number H 16733 |
| | V836659944 | 1 | Olive | From Serial or Engine Number H 16734 |
| 6 | **893501M91** | 1 | Intake Heater | |
| 7 | V836752077 | 1 | Bracket | |
| 8 | V563501782 | 2 | Screw | M3X16 |
| 9 | V835346794 | 1 | Tube | |
| 10 | V836659057 | 1 | Tube | |
| 11 | V615870812 | 3 | Washer | |
| 12 | V640435005 | 1 | Screw | |
| 13 | V836124941 | 2 | Support | |
| 14 | V602060610 | 2 | Band | |
| 15 | V504800800 | 2 | Nut | M8 |
| 16 | V528801400 | 2 | Screw | M8X25 |

1-LA29-605-A

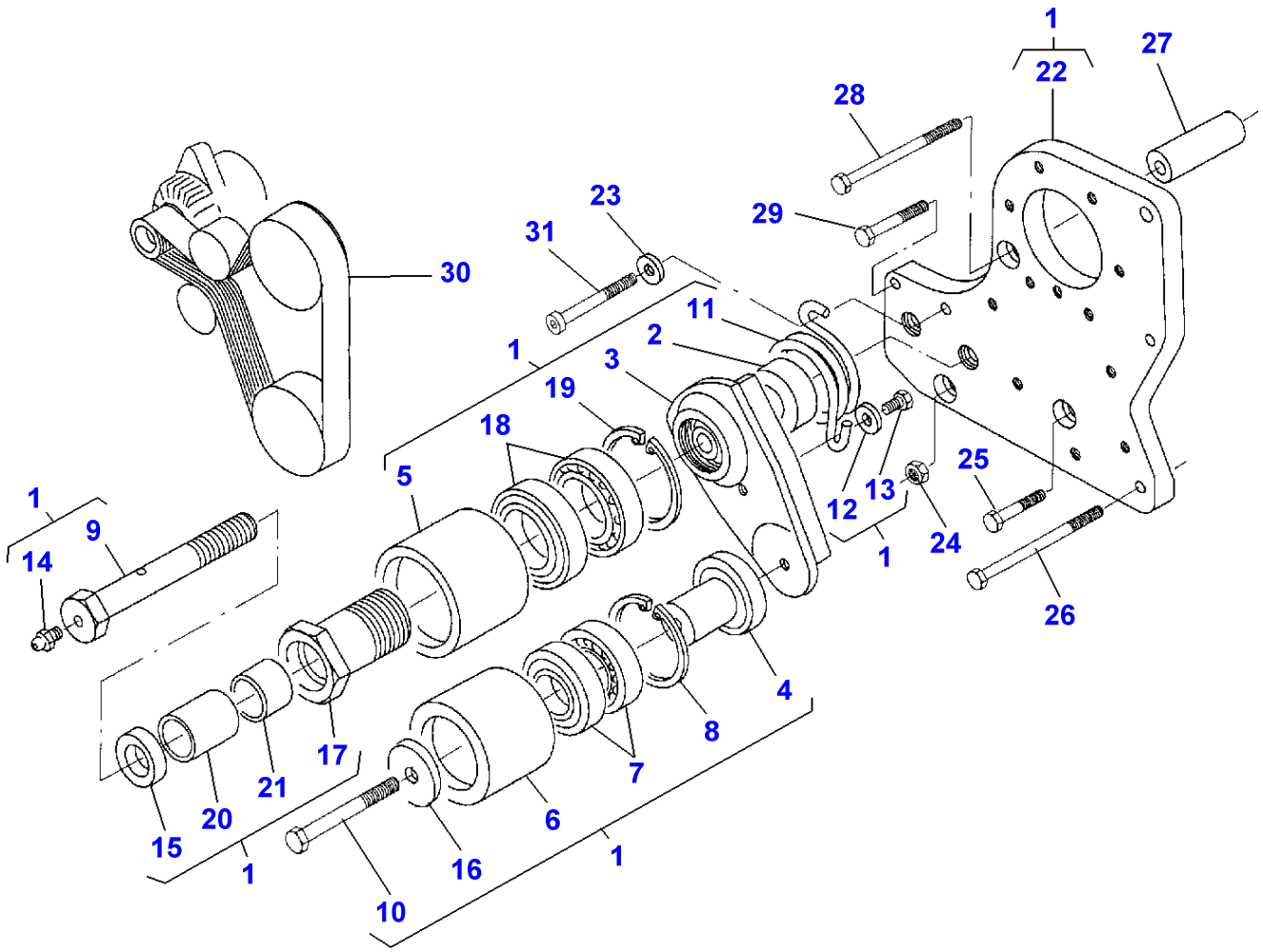
1
22
27
28
29
23
31
30
11
2
1
3
19
18
5
1
9
14
12
13
25
24
1
26
4
8
7
17
21
20
15
6
1
16
1
10

| Item | Part Number | Qty | Description | Comments |
|---|---|---|---|---|
| 1 | V836859612 | 1 | Tensioner | |
| 2 | V836859348 | 1 | Shaft | (1) |
| 3 | V836859347 | 1 | Support | (1) |
| 4 | V836855789 | 1 | Shaft | (1) |
| 5 | V836859683 | 1 | Roll | (1) |
| 6 | V836855666 | 1 | Roll | (1) |
| 7 | V610062054 | 2 | Bearing | (1) |
| 8 | V617330052 | 1 | Circlip | (1) |
| 9 | V836859357 | 1 | Screw | (1) |
| 10 | V529701880 | 1 | Screw | (1) M10X65 |
| 11 | V836855689 | 1 | Spring | (1) |
| 12 | V836120989 | 1 | Washer | (1) |
| 13 | V528801360 | 1 | Screw | (1) M8X16 |
| 14 | V644611006 | 1 | Greaser | (1) |
| 15 | V836859356 | 1 | Plate | (1) |
| 16 | V836855941 | 1 | Plate | (1) |
| 17 | V836859684 | 1 | Shaft | (1) |
| 18 | V610060083 | 2 | Bearing Assy | (1) |
| 19 | V617330068 | 1 | Circlip | (1) |
| 20 | V836859364 | 1 | Bush | (1) |
| 21 | V836859363 | 1 | Bush | (1) |
| 22 | V836855935 | 1 | Plate | (1) |
| 23 | V836120989 | 1 | Washer | |
| 24 | V504801002 | 1 | Nut | |
| 25 | V529801440 | 1 | Screw | M8X50 |
| 26 | V529801562 | 2 | Screw | M8X110 |
| 27 | V836855934 | 2 | Sleeve | |
| 28 | V529801550 | 1 | Screw | M8X100 |
| 29 | V529801500 | 1 | Screw | M8X75 |
| 30 | V836859731 | 1 | Belt | |
| 31 | V581804710 | 1 | Screw | M8X70 |

1-LA23-601-A

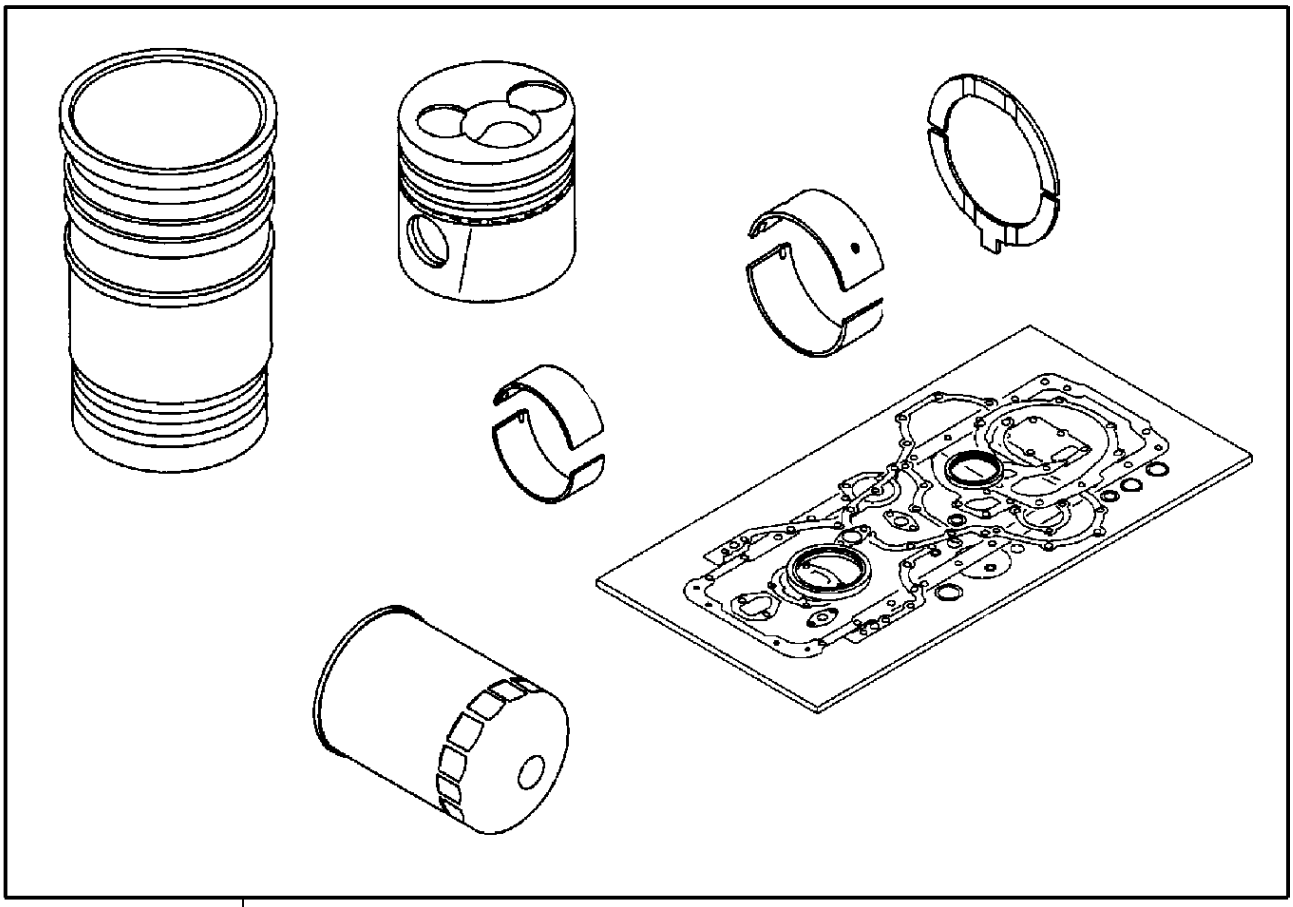

1

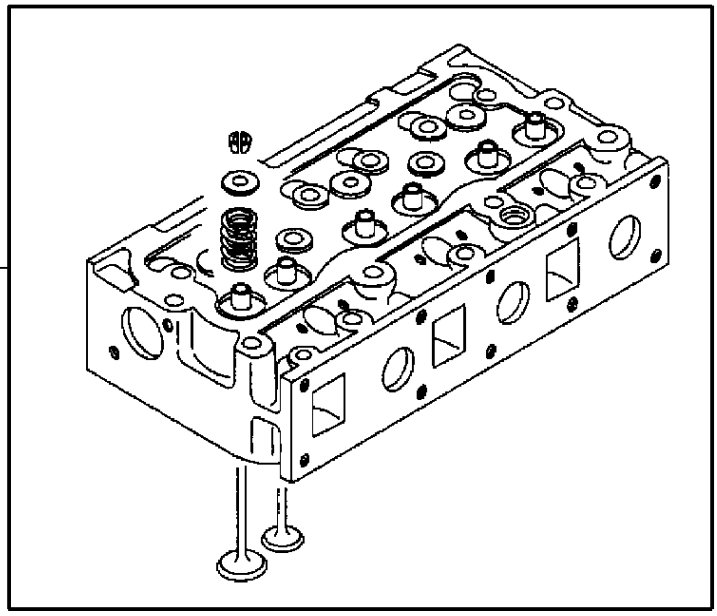

2

| Item | Part Number | Qty | Description |
|---|---|---|---|
| 1 | V836840986 | 1 | Kit, Repair |
| 2 | V836640897 | 2 | Cylinder Head |

1-LA24-602-B

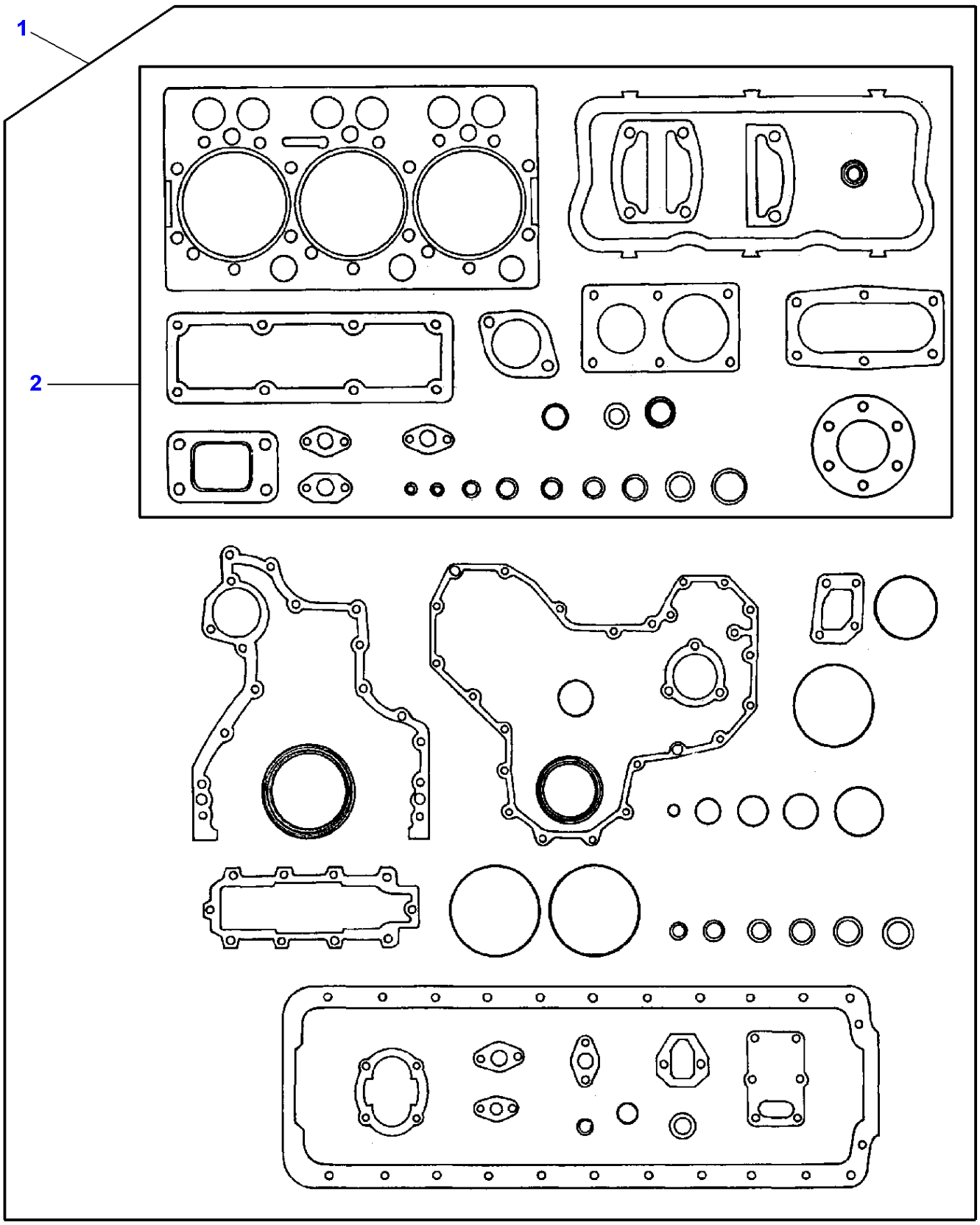

| Item | Part Number | Qty | Description | Comments |
|---|---|---|---|---|
| 1 | V836840985 | 1 | Kit, Joint | |
| 2 | **V836840984** | 1 | Gasket | (1) |

1-AC16-615-B

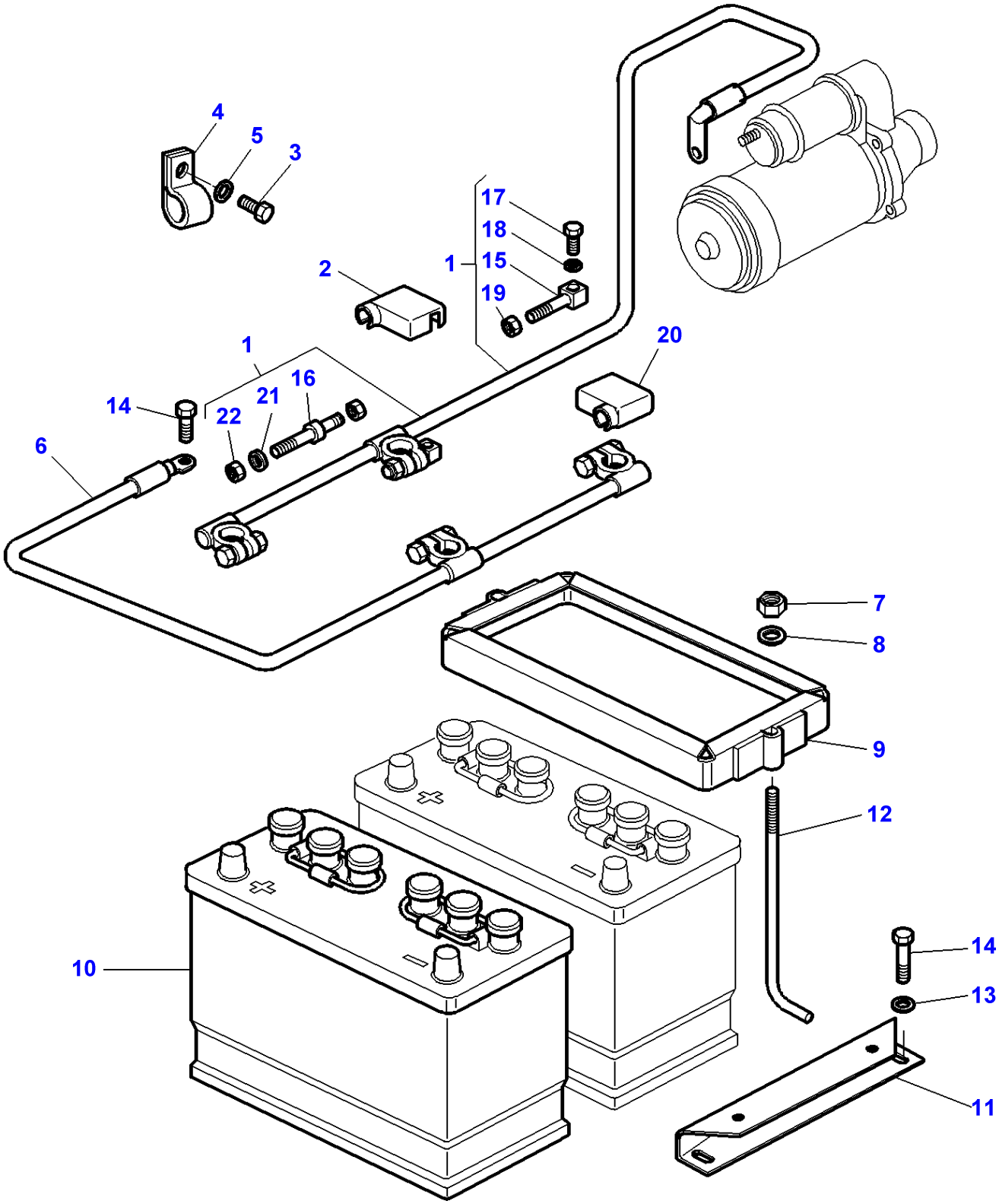

| Item | Part Number | Qty | Description | Comments |
|---|---|---|---|---|
| 1 | 3780615M2 | 1 | Battery Cable | Length 3300MM |
| 2 | 3618966M1 | 2 | Protector | Up to Serial or Engine Number H012025 |
| | 3618966M1 | 1 | Protector | From Serial or Engine Number H012026 |
| 3 | 339761X1 | 2 | Hex. Sock. Screw | M8X25 |
| 4 | 3387756M1 | 2 | Strap | |
| 5 | 390972X1 | 2 | Washer Metric | |
| 6 | 3780337M1 | 1 | Cable | |
| 7 | 339030X1 | 8 | Nut Metric | |
| 8 | 391038X1 | 4 | Washer | |
| 9 | 906170M91 | 2 | Frame Assy | |
| 10 | | 2 | Battery | [A]<br>505 Amp / 105 Ah |
| 11 | 3713452M1 | 2 | Stop | |
| 12 | 1691384M2 | 4 | Draglink | |
| 13 | 391039X1 | 4 | Washer Metric | |
| 14 | 339124X1 | 5 | Hex. Sock. Screw | M8X16 |
| 15 | 3781143M1 | 1 | Screw | (1)<br>Alternative 3781370M1 |
| 16 | 3781370M1 | 1 | Screw | (1)<br>Alternative 3781143M1 |
| 17 | 3010859X1 | 1 | Screw | (1) |
| 18 | 3010860X1 | 1 | Washer | (1) |
| 19 | | 2 | Nut | (1) |
| 20 | 3782138M2 | 1 | Protector | From Serial or Engine Number H012026 |
| 21 | 3010860X1 | 1 | Washer | (1) |
| 22 | | 2 | Nut | (1) |

**FOOTNOTE [A]** PLEASE REFER TO MARKETING CATALOG

1-AC08-610-A

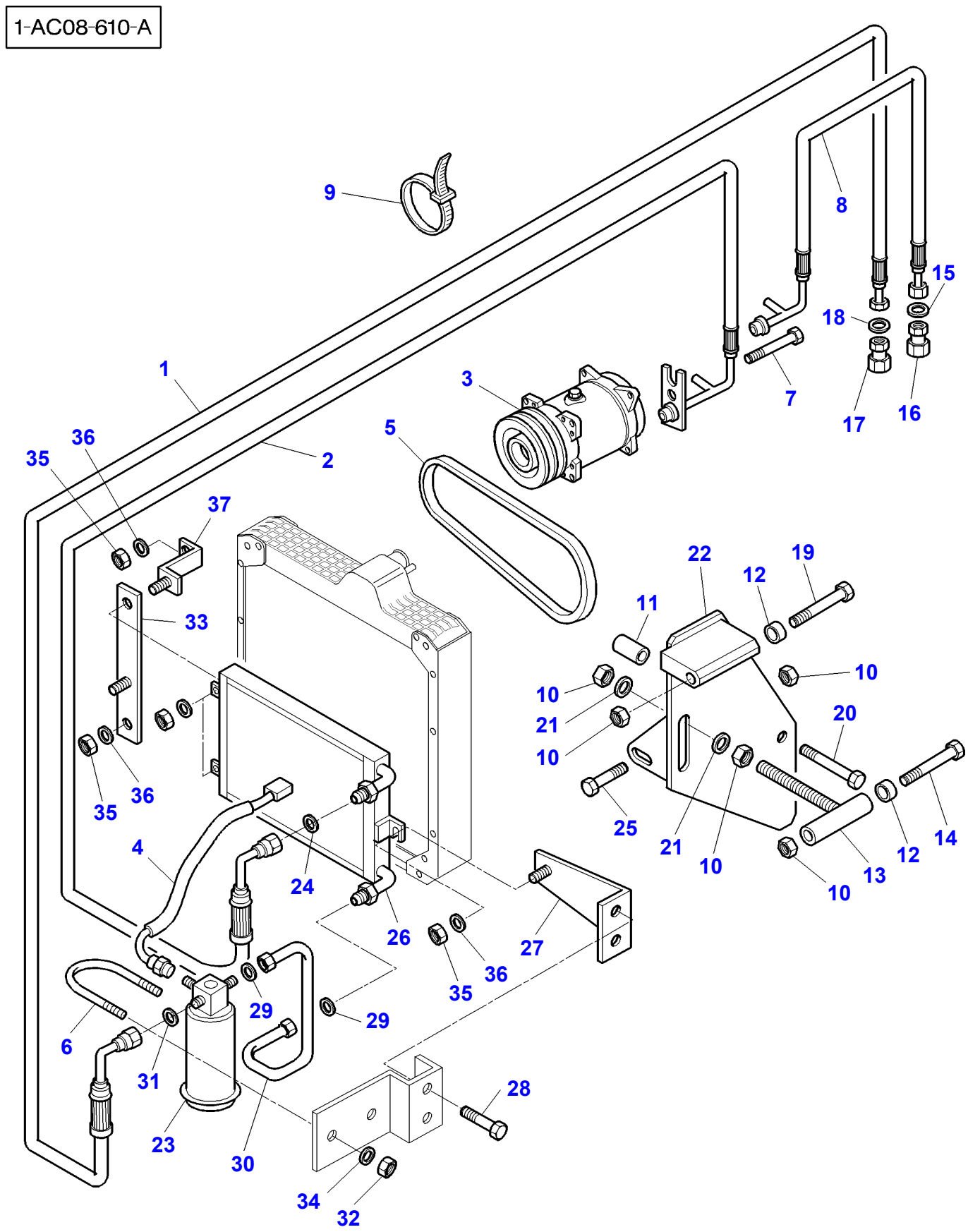
9
8
15
18
1
3
7
17
16
5
36
35
2
37
22
19
12
11
33
10
10
21
20
10
35
36
25
21
10
13
12
14
10
4
24
26
27
36
35
29
29
6
31
28
23
30
34
32

| Item | Part Number | Qty | Description | Comments |
|---|---|---|---|---|
| 1 | 3714434M1 | 1 | Hydr Hose | |
| 2 | 3777257M1 | 1 | Hydr Hose | |
| 3 | 3712528M2 | 1 | Compressor | Up to Serial or Engine Number H152021 |
| | 3782613M2 | 1 | Compressor | From Serial or Engine Number H152022 |
| 4 | **3712526M1** | 1 | Pressure Switch | |
| 5 | 3582951M1 | 1 | Belt | |
| 6 | 3383977M1 | 1 | Stirrup | |
| 7 | 353538X1 | 1 | Screw Unf | 3/8-24X25 |
| 8 | 3777256M1 | 1 | Hydr Hose | |
| 9 | 3619622M1 | 4 | Cable Tie | |
| 10 | 1440329X1 | 5 | Locknut | |
| 11 | 3777254M1 | 2 | Spacer | |
| 12 | 3042637M2 | 2 | Spacer | |
| 13 | 3580140M92 | 1 | Tensioner | |
| 14 | 1442487X1 | 1 | Bolt Metric | M10X130mm |
| 15 | 3010474X1 | 1 | O Ring | |
| 16 | 368543X1 | 1 | Union | |
| 17 | 368524X1 | 1 | Union | |
| 18 | 3010502X1 | 1 | O Ring | |
| 19 | 1442487X1 | 1 | Bolt Metric | M10X130mm |
| 20 | 390246X1 | 2 | Bolt | M8X70 |
| 21 | 390734X1 | 2 | Washer | |
| 22 | 3777255M1 | 1 | Support | |
| 23 | **3712495M1** | 1 | Filter | |
| 24 | 3010472X1 | 1 | O Ring | |
| 25 | 339018X1 | 1 | Bolt Metric | M10X40 |
| 26 | 3383908M5 | 1 | Condenser | |
| 27 | 3777258M1 | 1 | Support | |
| 28 | 339124X1 | 2 | Hex. Sock. Screw | M8X16 |
| 29 | **3010471X1** | 2 | O Ring | |
| 30 | 3713459M1 | 1 | Tube | |
| 31 | **3010471X1** | 1 | O Ring | |
| 32 | 339030X1 | 2 | Nut Metric | |
| 33 | 3779481M1 | 1 | Support | |
| 34 | 390971X1 | 2 | Washer | |
| 35 | 339169X1 | 5 | Nut | M8 |
| 36 | 390972X1 | 5 | Washer Metric | |
| 37 | 3777259M1 | 2 | Support | |

1-AC49-600-A

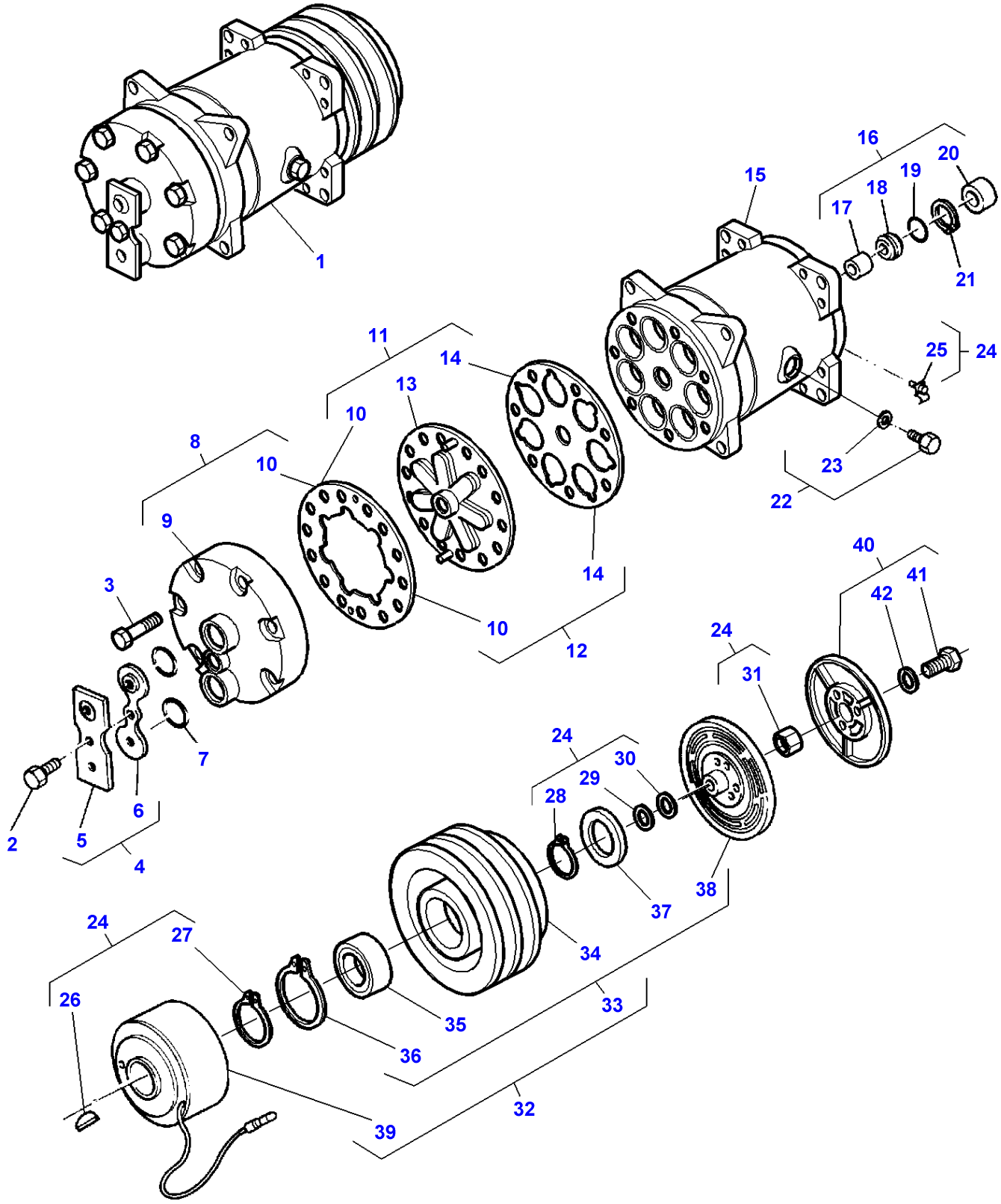
1
2
3
4
5
6
7
8
9
10
10
10
11
12
13
14
14
15
16
17
18
19
20
21
22
23
24
24
24
24
25
26
27
28
29
30
31
32
33
34
35
36
37
38
39
40
41
42

| Item | Part Number | Qty | Description | Comments |
|---|---|---|---|---|
| 1 | 3712528M2 | 1 | Compressor | SDH715QC7952 |
| 2 | 3901157M1 | 1 | Screw | (1) |
| 3 | 3901154M1 | 6 | Screw | (1) |
| 4 | 3901156M91 | 1 | Kit | (1) |
| 5 | | 1 | Plate | (4) |
| | | | | Not serviced,order REF.4 |
| 6 | | 1 | Cover | (4) |
| | | | | Not serviced,order REF.4 |
| 7 | 3901155M1 | 2 | O Ring | (1) |
| 8 | 3901147M91 | 1 | Head | (1) |
| 9 | | 1 | Cover | (8) |
| | | | | Not serviced,order REF.8 |
| 10 | | 1 | Gasket | (8) |
| | | | | Not serviced,order REF.8 |
| 11 | 3901148M91 | 1 | Kit | (1) |
| 12 | 3901151M91 | 1 | Kit, Gasket | (1) |
| 13 | | 1 | Plate | (11) |
| | | | | Not serviced,order REF.11 |
| 14 | | 1 | Gasket | (11) |
| | | | | Not serviced,order REF.11 |
| 15 | | 1 | Body | (1) |
| | | | | Not serviced,order REF.1 |
| 16 | 3901149M91 | 1 | Kit, Seal | (1) |
| 17 | | 1 | Seal | (16) |
| | | | | Not serviced,order REF.16 |
| 18 | | 1 | Seal | (16) |
| | | | | Not serviced,order REF.16 |
| 19 | | 1 | O Ring | (16) |
| | | | | Not serviced,order REF.16 |
| 20 | | 1 | Felt Ring | (16) |
| | | | | Not serviced,order REF.16 |
| 21 | 3901150M1 | 1 | Circlip | (1) |
| 22 | 3901152M91 | 1 | Plug | (1) |
| 23 | 3901153M1 | 1 | O Ring | (22) |
| 24 | 3901161M91 | 1 | Kit | (1) |
| 25 | | 1 | Clip | (24) |
| | | | | Not serviced,order REF.24 |
| 26 | | 1 | Key | (24) |
| | | | | Not serviced,order REF.24 |
| 27 | | 1 | Circlip | (24) |
| | | | | Not serviced,order REF.24 |
| 28 | | 1 | Circlip | (24) |
| | | | | Not serviced,order REF.24 |
| 29 | | 1 | Ring | (24) |
| | | | | Not serviced,order REF.24 |
| 30 | | 1 | Ring | (24) |
| | | | | Not serviced,order REF.24 |
| 31 | | 1 | Nut | (24) |
| | | | | Not serviced,order REF.24 |
| 32 | | 1 | Clutch | [A] |
| | | | | (1) |
| 33 | 3902115M91 | 1 | Rotor | (32) |
| 34 | | 1 | Rotor | (33) |
| | | | | Not serviced,order REF.33 |
| 35 | 3901159M1 | 1 | Bearing | (33) |
| 36 | | 1 | Circlip | (33) |
| | | | | Not serviced,order REF.33 |
| 37 | 3901162M1 | 1 | Cover | (33) |
| 38 | | 1 | Armature | (33) |
| | | | | Not serviced,order REF.33 |
| 39 | 3902142M1 | 1 | Magnet | (1) |
| 40 | 3901163M91 | 1 | Kit | (1) |
| 41 | 373110X1 | 3 | Screw | (40) |
| 42 | 22463X | 3 | Lock Washer | (40) |

**FOOTNOTE [A]** NOT SERVICED-ORDER DETAIL

1-AC49-601-A

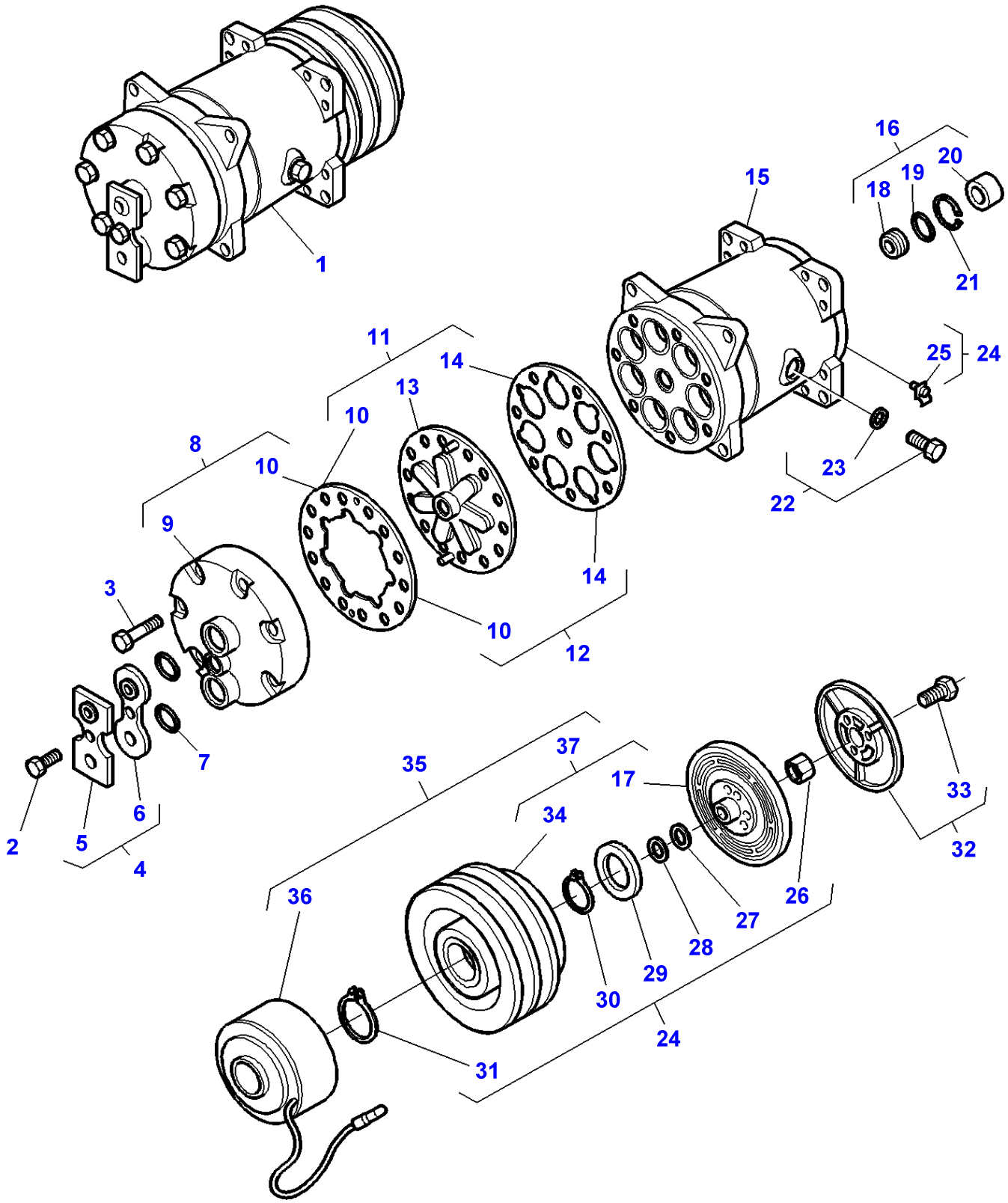
1
2
3
4
5
6
7
8
9
10
10
10
11
12
13
14
14
15
16
17
18
19
20
21
22
23
24
25
24
26
27
28
29
30
31
32
33
34
35
36
37

| Item | Part Number | Qty | Description | Comments |
|---|---|---|---|---|
| 1 | 3782613M2 | 1 | Compressor | |
| 2 | 3901157M1 | 1 | Screw | (1) |
| 3 | 3901154M1 | 6 | Screw | (1) |
| 4 | 3903258M91 | 1 | Kit | (1) |
| 5 | | 1 | Plate | (4) Not serviced,order REF.4 |
| 6 | | 1 | Cover | (4) Not serviced,order REF.4 |
| 7 | 3901155M1 | 2 | O Ring | (1) |
| 8 | 3901147M91 | 1 | Head | (1) |
| 9 | | 1 | Cover | (8) Not serviced,order REF.8 |
| 10 | | 1 | Gasket | (8) Not serviced,order REF.8 |
| 11 | 3903255M91 | 1 | Kit | (1) |
| 12 | 3903256M91 | 1 | Kit, Gasket | (1) |
| 13 | | 1 | Plate | (11) Not serviced,order REF.11 |
| 14 | | 1 | Gasket | (11) Not serviced,order REF.11 |
| 15 | | 1 | Body | (1) Not serviced,order REF.1 |
| 16 | 3903257M91 | 1 | Kit, Seal | (1) |
| 17 | | 1 | Armature | (37) Not serviced,order REF.37 |
| 18 | | 1 | Seal | (16) Not serviced,order REF.16 |
| 19 | | 1 | O Ring | (16) Not serviced,order REF.16 |
| 20 | | 1 | Felt Ring | (16) Not serviced,order REF.16 |
| 21 | 3901150M1 | 1 | Circlip | (1) |
| 22 | 3901152M91 | 1 | Plug | (1) |
| 23 | 3901153M1 | 1 | O Ring | (22) |
| 24 | 3903263M91 | 1 | Kit | (1) |
| 25 | | 1 | Clip | (24) Not serviced,order REF.24 |
| 26 | | 1 | Nut | (24) Not serviced,order REF.24 |
| 27 | | 1 | Ring | (24) Not serviced,order REF.24 |
| 28 | | 1 | Ring | (24) Not serviced,order REF.24 |
| 29 | 3901162M1 | 1 | Cover | (24) |
| 30 | | 1 | Clip | (24) Not serviced,order REF.24 |
| 31 | | 1 | Clip | (24) Not serviced,order REF.24 |
| 32 | 3903259M91 | 1 | Kit | |
| 33 | | 3 | Screw | (32) Not serviced,order REF.32 |
| 34 | | 1 | Pulley | (37) Not serviced,order REF.37 |
| 35 | 3903260M92 | 1 | Clutch | (1) |
| 36 | 3903262M91 | 1 | Coil | (35) |
| 37 | 3903261M92 | 1 | Rotor | (35) |

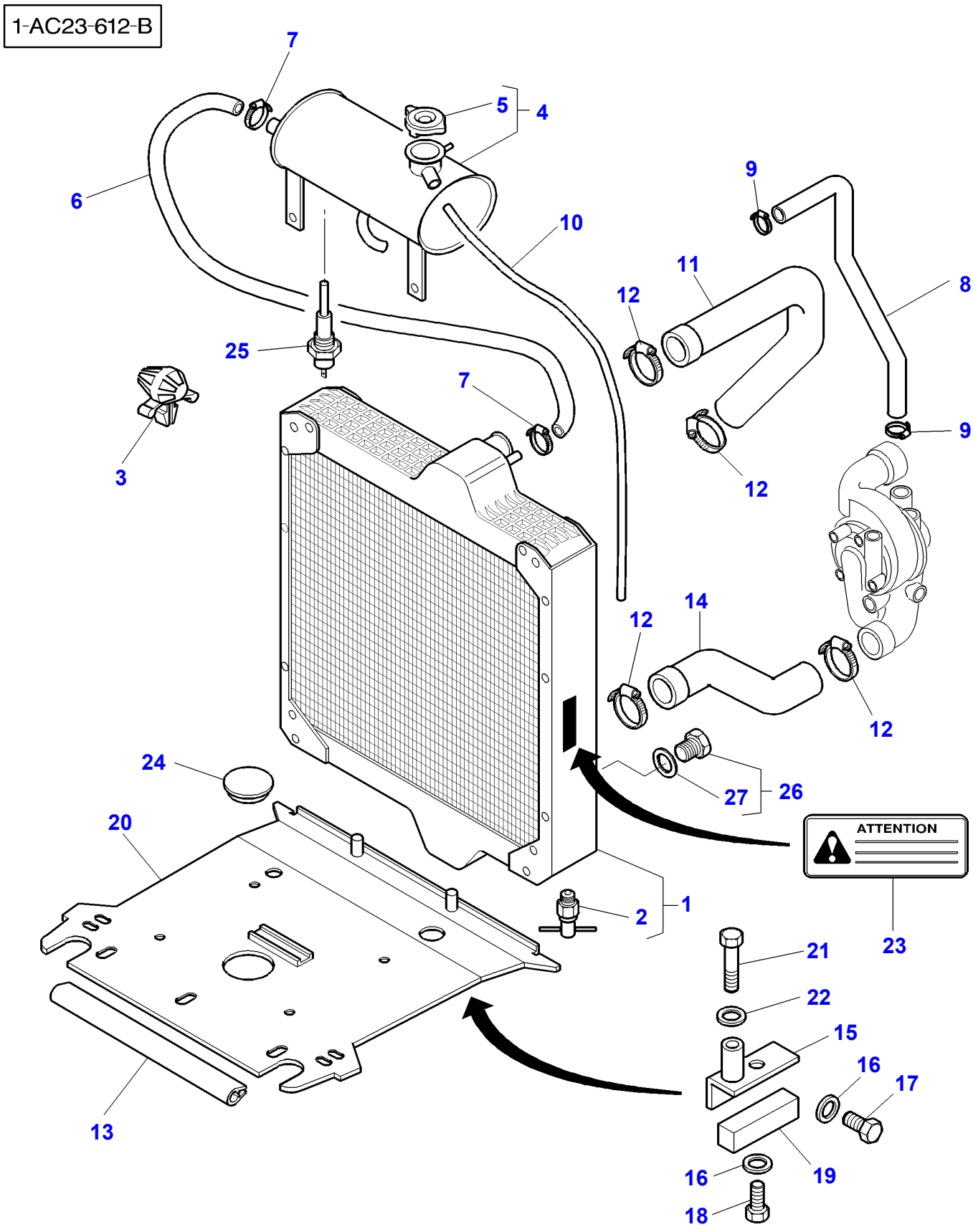
1-AC23-612-B
7
5
4
6
10
9
11
12
8
25
7
9
3
12
14
12
12
24
26
27
ATTENTION
20
2
1
23
21
22
15
16
17
13
16
19
18

| Item | Part Number | Qty | Description | Comments |
|---|---|---|---|---|
| 1 | 3777264M3 | 1 | Water Cooler | |
| 2 | **3902881M1** | 1 | Plug | (1) |
| 3 | 3615984M1 | 2 | Fastener | |
| 4 | 3777297M92 | 1 | Tank | |
| 5 | **180224M92** | 1 | Radiator Cap | (4) |
| 6 | 3580327M1 | 1 | Tube | Length 550MM |
| 7 | 3712465M1 | 2 | Clamp | |
| 8 | **3777268M1** | 1 | Water Hose | |
| 9 | 338615X1 | 2 | Clamp | |
| 10 | 3583427M1 | 1 | Tube | |
| 11 | 3777260M2 | 1 | Water Hose | |
| 12 | 338615X1 | 4 | Clamp | |
| 13 | 3618702M2 | 1 | Gasket | Length 540 MM |
| 14 | **3778088M1** | 1 | Water Hose | |
| 15 | 3777262M3 | 1 | Support | Left Hand |
| | 3777263M3 | 1 | Support | Right Hand |
| 16 | 390734X1 | 6 | Washer | Diameter 10-21MM<br>Thickness 2MM |
| 17 | 339401X1 | 4 | Screw Metric | M10X25 |
| 18 | 339081X1 | 2 | Screw Metric | M10X20 |
| 19 | 3581180M1 | 2 | Foam | 50X90X250MM |
| 20 | 3777272M2 | 1 | Shield | |
| 21 | 339124X1 | 4 | Hex. Sock. Screw | M8X16 |
| 22 | 390972X1 | 4 | Washer Metric | Diameter 9-17MM<br>Thickness 1,7MM |
| 23 | | 1 | Decal | See Page - Reference Number 100-0050/8 |
| 24 | 3582590M1 | 1 | Plug | |
| 25 | 3617129M1 | 1 | Sensor | |
| 26 | 358724X91 | 1 | Plug | |
| 27 | 831497M1 | 1 | O Ring | (26) |

1-AC23-613-B

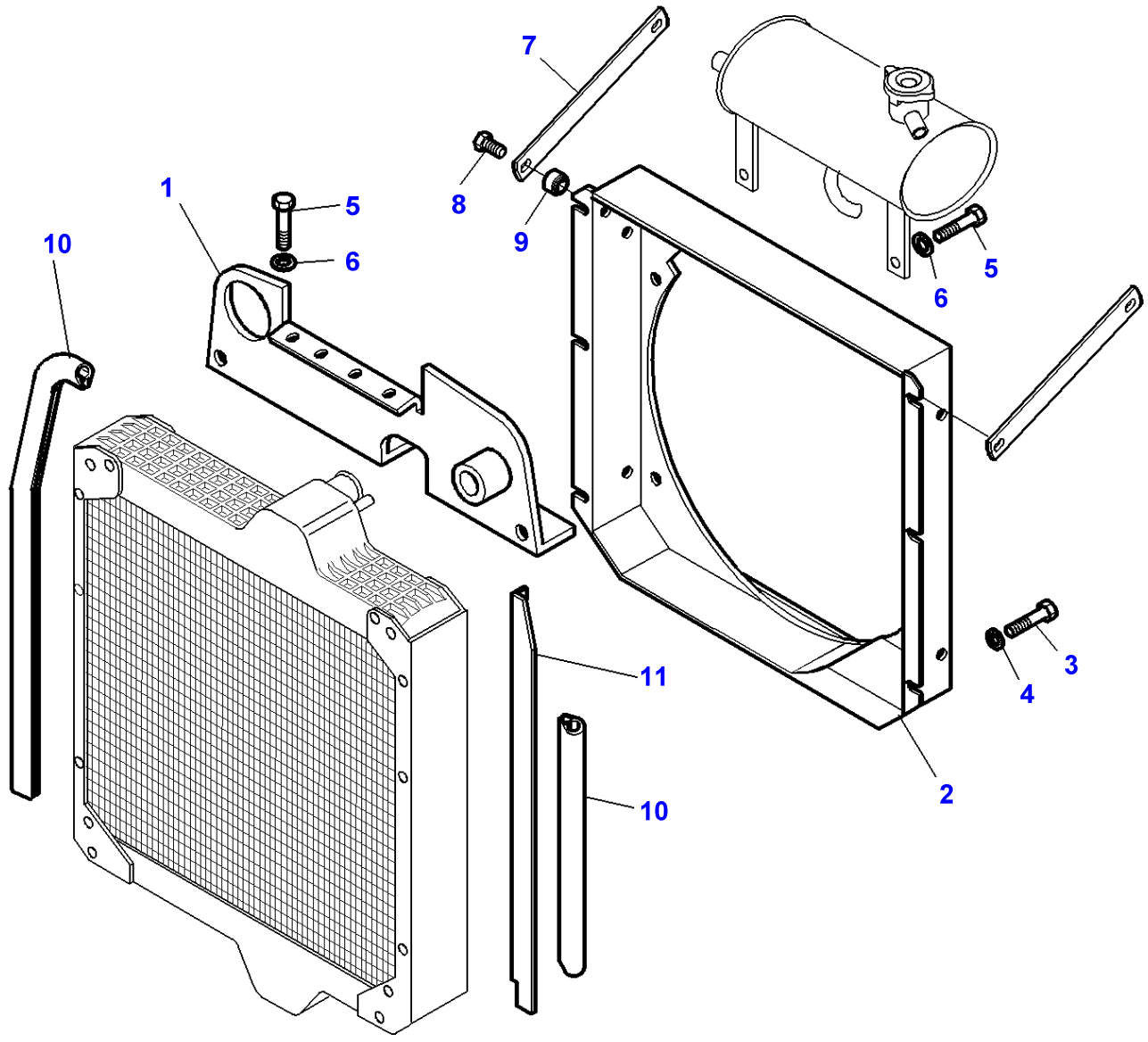

| Item | Part Number | Qty | Description | Comments |
|---|---|---|---|---|
| 1 | 3777271M4 | 1 | Baffle | |
| 2 | 3777270M4 | 1 | Shroud | |
| 3 | 391074X1 | 6 | Hex. Sock. Screw | M6X12 |
| 4 | 391038X1 | 6 | Washer | |
| 5 | 339124X1 | 6 | Hex. Sock. Screw | M8X16 |
| 6 | 390972X1 | 6 | Washer Metric | |
| 7 | 3714745M1 | 2 | Support | |
| 8 | 339124X1 | 2 | Hex. Sock. Screw | M8X16 |
| 9 | 390972X1 | 2 | Washer Metric | |
| 10 | 3712639M1 | 1 | Gasket | Length 355MM |
| | 3713678M1 | 3 | Gasket | Length 920MM |
| | 3780659M1 | 2 | Gasket | Length 790MM |
| 11 | 3777265M1 | 1 | Sealing Carrier | Left Hand |
| | 3777266M1 | 1 | Sealing Carrier | Right Hand |

1-AC28-602-A

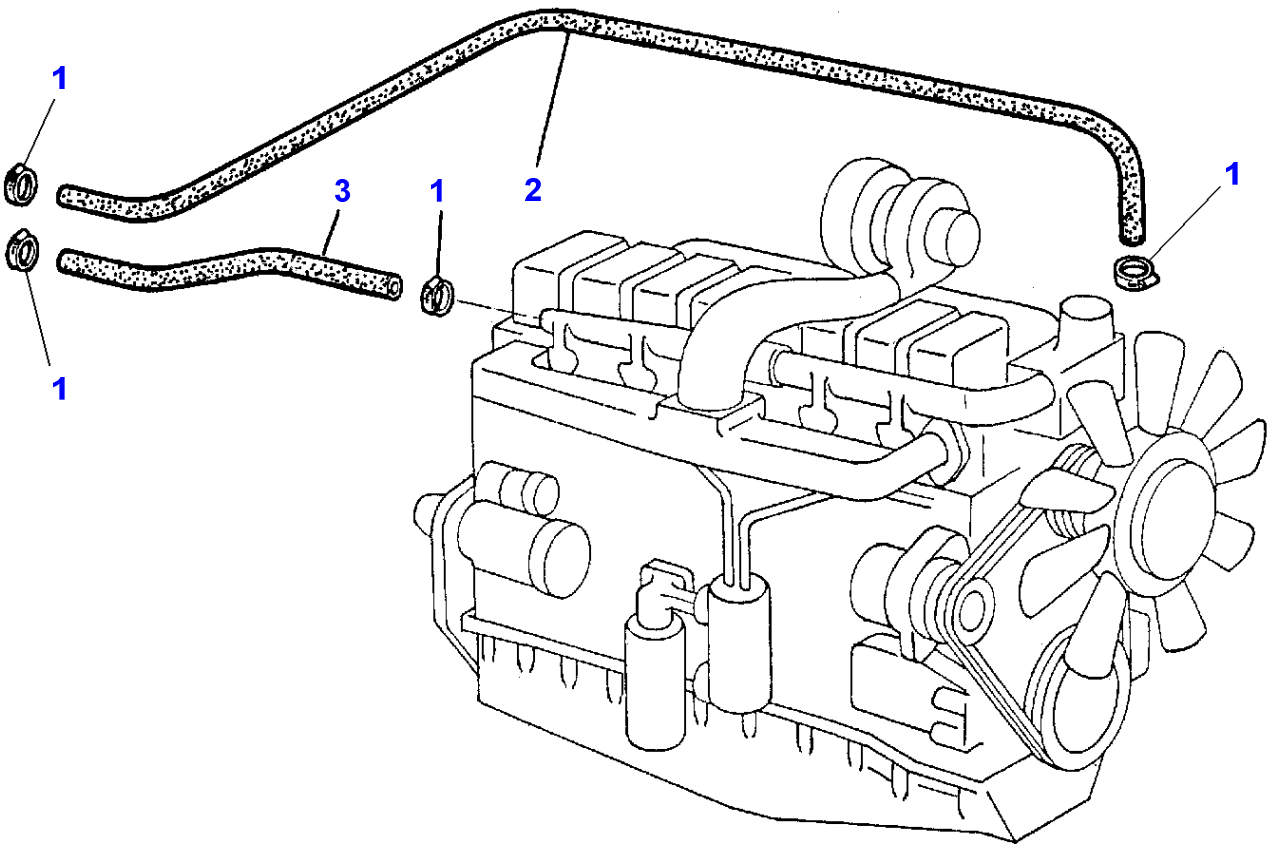

| Item | Part Number | Qty | Description | Comments |
|---|---|---|---|---|
| 1 | 3019564X1 | 4 | Hose Clip | Diameter 16-27 MM |
| 2 | 3580928M1 | 1 | Hose | Length 2800MM |
| 3 | 3580959M3 | 1 | Hose | Length 1150MM |

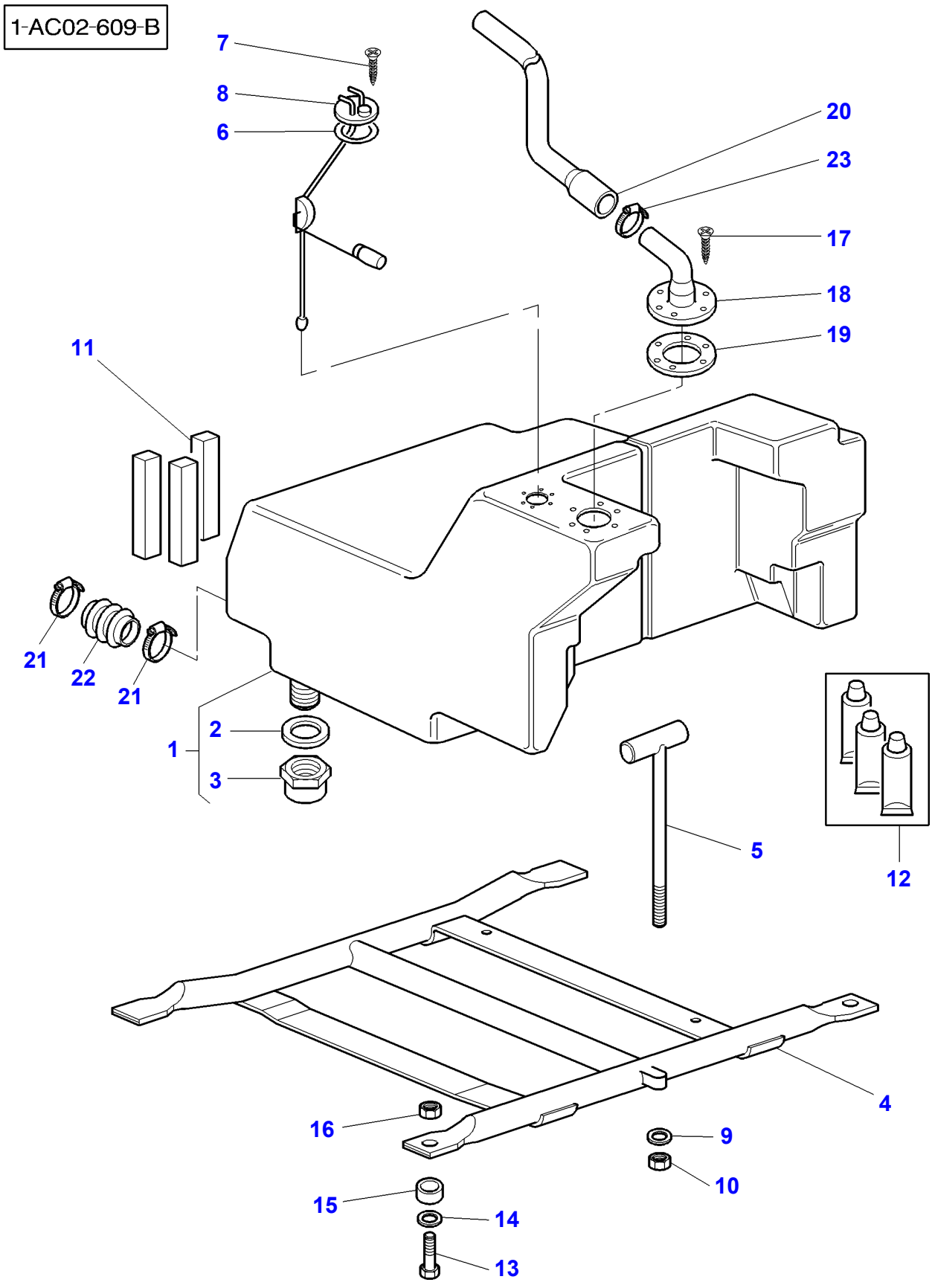
1-AC02-609-B
7
8
6
20
23
17
18
19
11
21
22
21
2
1
3
5
12
4
16
9
10
15
14
13

| Item | Part Number | Qty | Description | Comments |
|---|---|---|---|---|
| 1 | 3777384M94 | 1 | Fuel Tank | 275L |
| 2 | 3616911M1 | 1 | Gasket | (1) |
| 3 | 3616909M1 | 1 | Plug | (1) |
| 4 | 3777390M1 | 1 | Support | |
| 5 | 3777391M1 | 1 | Stem | |
| 6 | 1617869M2 | 1 | Gasket | |
| 7 | 3005728X1 | 6 | Screw | No 10X16 |
| 8 | 3777389M2 | 1 | Fuel Gauge | |
| 9 | 390734X1 | 1 | Washer | |
| 10 | 1440329X1 | 1 | Locknut | M10 |
| 11 | 3600195M91 | 1 | Parts Pack | |
| 12 | 3600444M91 | 1 | Kit, Service | |
| 13 | 3009496X1 | 2 | Bolt Metric | M10X45 |
| 14 | 385362X1 | 2 | Washer | |
| 15 | 3580856M1 | 2 | Spacer | |
| 16 | 1440329X1 | 2 | Locknut | M10 |
| 17 | 3005728X1 | 6 | Screw | No 10X16 |
| 18 | 3782043M1 | 1 | Non Return Valve | |
| 19 | 1617869M2 | 1 | Gasket | |
| 20 | 3778733M2 | 1 | Tube | |
| 21 | 1440860X1 | 2 | Clamp | |
| 22 | 3582877M2 | 1 | Hose | Length 102MM |
| 23 | 338614X1 | 1 | Hose Clip | |

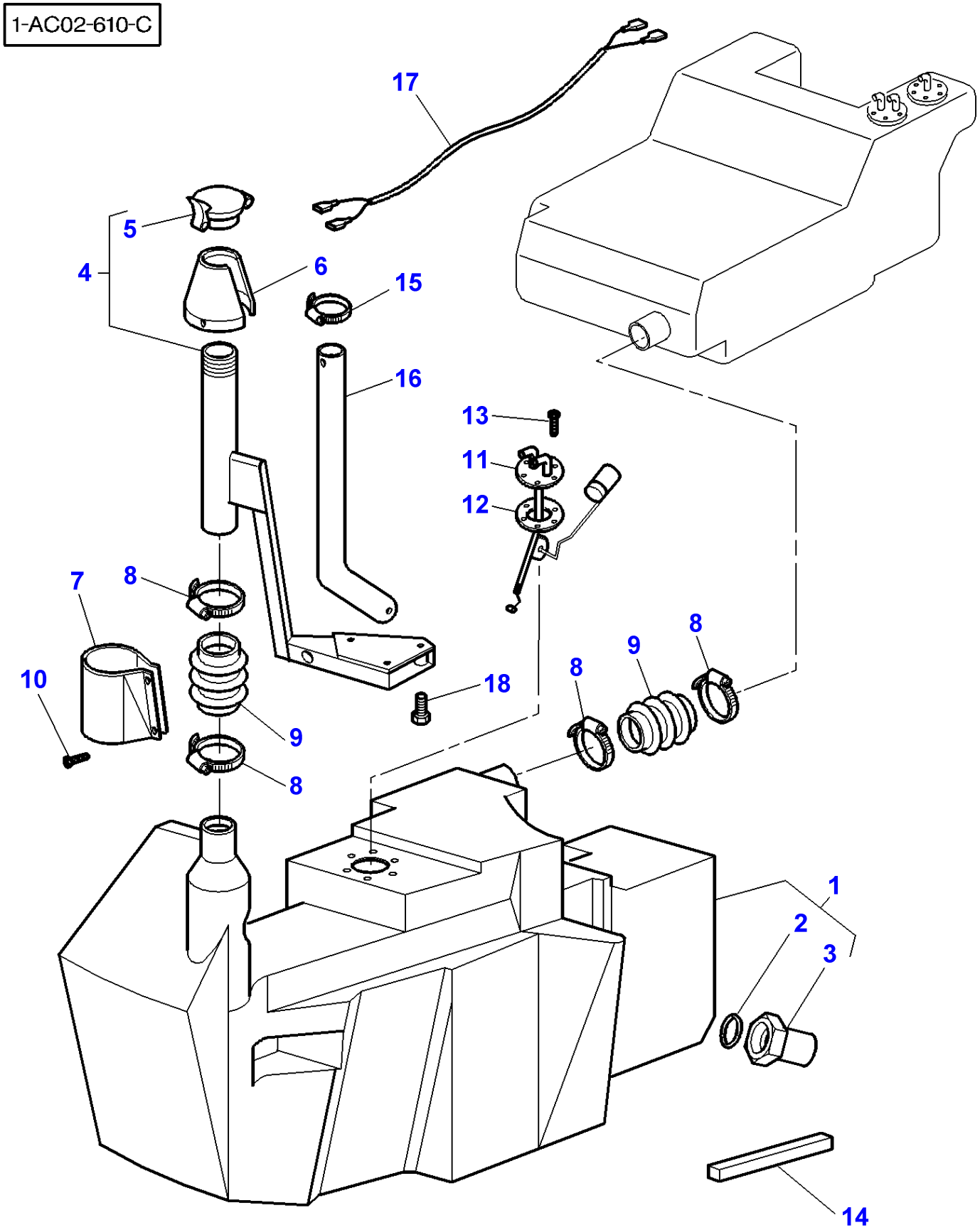
1-AC02-610-C
17
5
4
6
15
16
13
11
12
7
8
10
9
8
18
8
9
8
1
2
3
14

| Item | Part Number | Qty | Description | Comments |
|---|---|---|---|---|
| 1 | 3777386M93 | 1 | Tank | |
| 2 | 3616911M1 | 1 | Gasket | (1) |
| 3 | 3616909M1 | 1 | Plug | (1) |
| 4 | 3778296M96 | 1 | Spout | |
| 5 | 3778761M1 | 1 | Plug | (4) |
| 6 | 3778531M1 | 1 | Cowl | |
| 7 | 3778781M1 | 1 | Cowl | |
| 8 | 1440860X1 | 4 | Clamp | |
| 9 | 3778297M1 | 2 | Hose | Diameter 68 / 110 |
| 10 | 3005728X1 | 2 | Screw | No 10X16 |
| 11 | 3777392M3 | 1 | Dipstick | |
| 12 | 1617869M2 | 1 | Gasket | |
| 13 | 3005728X1 | 6 | Screw | No 10X16 |
| 14 | 3618690M1 | 2 | Gasket | 30 X 13 X 545MM |
| 15 | 3779583M1 | 1 | Clamp | Up to Serial or Engine Number G327011 |
| 16 | 3779410M2 | 1 | Hose | Length 2000MM<br>Up to Serial or Engine Number G327011 |
| 17 | 3582936M1 | 1 | Harness | |
| 18 | 3009501X1 | 2 | Bolt | M10X70 |
| | 3009498X1 | 1 | Bolt Metric | M10X55 |

1-AC02-614-A

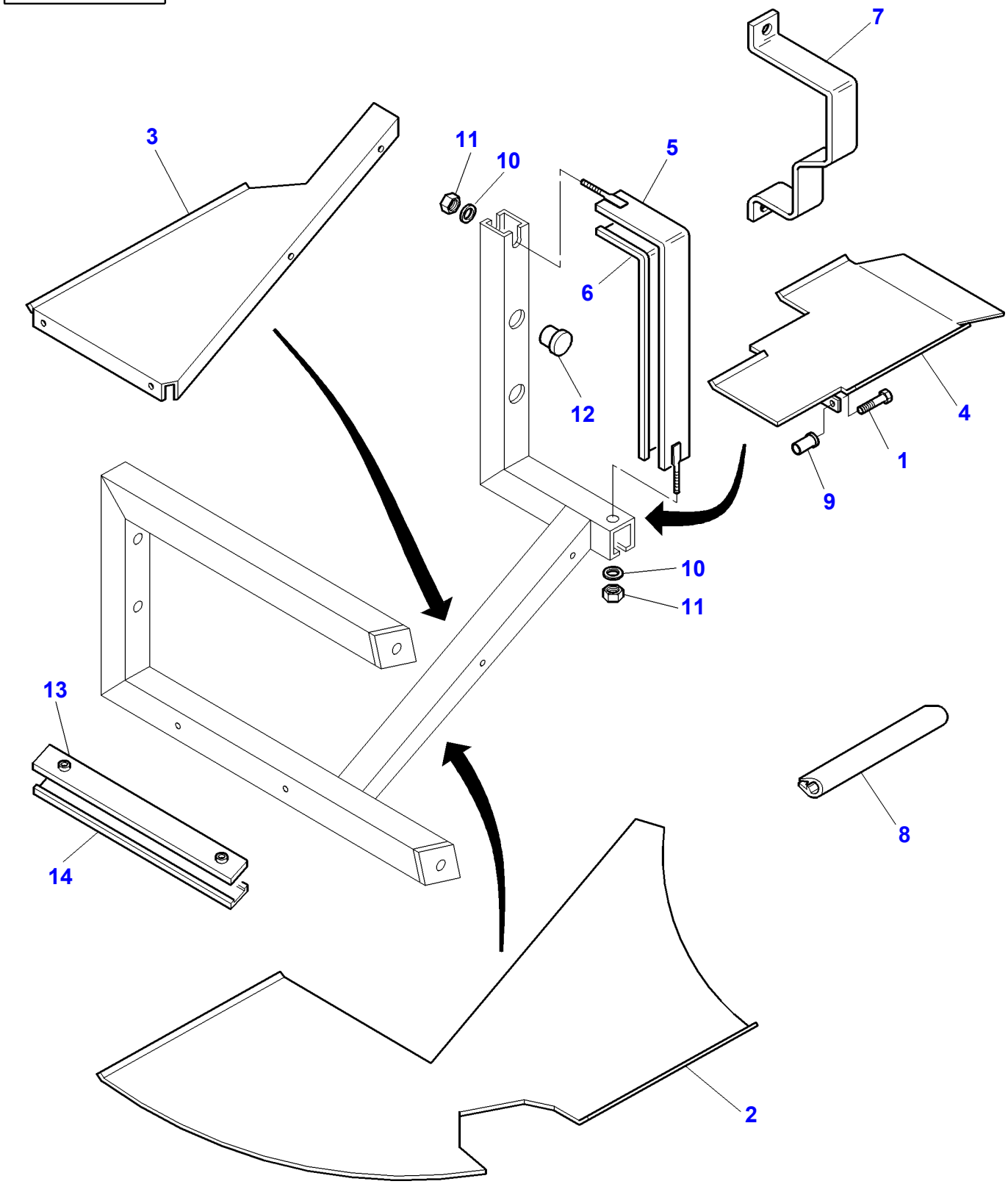

| Item | Part Number | Qty | Description | Comments |
|---|---|---|---|---|
| 1 | 390830X1 | 2 | Screw | M8X70 |
| | 339123X1 | 9 | Hex. Sock. Screw | M8X20 |
| 2 | 3778303M2 | 1 | Cowl | |
| 3 | 3778301M1 | 1 | Cowl | |
| 4 | 3778302M1 | 1 | Cowl | |
| 5 | 3778298M1 | 1 | Bridle | |
| 6 | 3778317M1 | 1 | Protector | |
| 7 | 3778299M1 | 1 | Stop | |
| 8 | 3778851M1 | 1 | Gasket | Length 215MM |
| | 3778852M1 | 1 | Gasket | Length 125MM |
| 9 | 3778304M1 | 11 | Nut | M8 |
| 10 | 391038X1 | 2 | Washer | |
| 11 | 1441500X1 | 6 | Locknut | M6 |
| 12 | 3580599M1 | 2 | Plug | |
| 13 | 3780189M91 | 1 | Support | Replace and repair. Old not interchangeable with new 3778300M2 |
| 14 | 3778385M1 | 1 | Protector | |

1-AC02-616-A

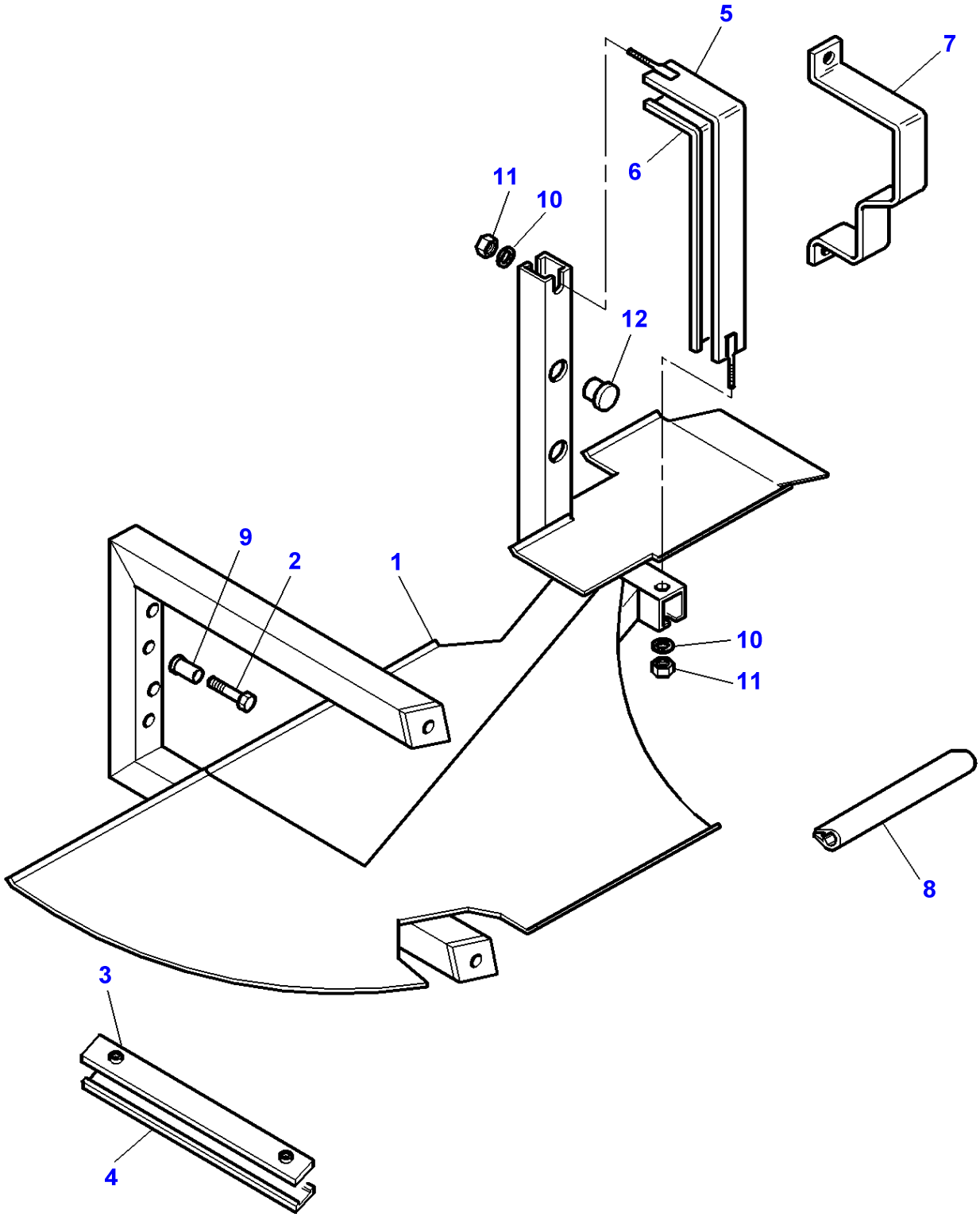

| Item | Part Number | Qty | Description | Comments |
|---|---|---|---|---|
| 1 | 3782401M93 | 1 | Frame | |
| 2 | 390830X1 | 1 | Screw | M8X70 |
| | 339123X1 | 3 | Hex. Sock. Screw | M8X20 |
| 3 | 3780189M91 | 1 | Support | Replace and repair. Old not interchangeable with new 3778300M2 |
| 4 | 3778385M1 | 1 | Protector | |
| 5 | 3778298M1 | 1 | Bridle | |
| 6 | 3778317M1 | 1 | Protector | |
| 7 | 3778299M1 | 1 | Stop | |
| 8 | 3778851M1 | 1 | Gasket | Length 215MM |
| | 3778852M1 | 1 | Gasket | Length 125MM |
| 9 | 3778304M1 | 7 | Nut | M8 |
| 10 | 391038X1 | 2 | Washer | |
| 11 | 1441500X1 | 6 | Locknut | M6 |
| 12 | 3580599M1 | 2 | Plug | |

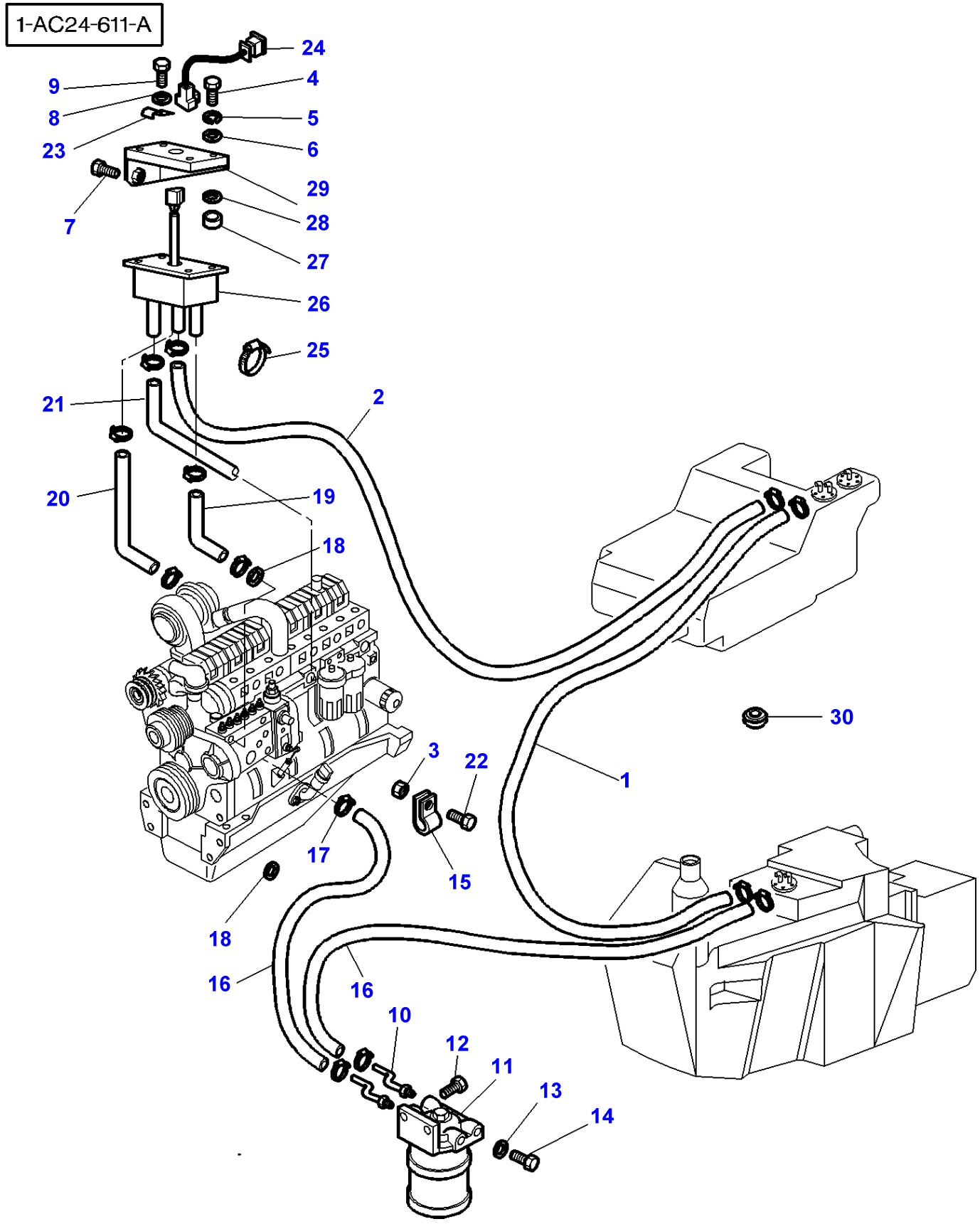
1-AC24-611-A
24
9
4
8
5
23
6
29
7
28
27
26
25
21
2
20
19
18
30
3
22
1
17
15
18
16
16
10
12
11
13
14

| Item | Part Number | Qty | Description | Comments |
|---|---|---|---|---|
| 1 | 3777800M1 | 1 | Hydr Hose | Length 1550MM |
| 2 | 3777801M1 | 1 | Hydr Hose | Length 3040MM |
| | 3780476M1 | 1 | Hydr Hose | Length 3500MM |
| 3 | 339169X1 | X | Nut | Diameter M8 |
| 4 | 339563X1 | 4 | Screw Metric | Diameter M5X20MM |
| 5 | 339381X1 | 4 | Lock Washer | Diameter 5MM |
| 6 | 339024X1 | 4 | Washer Metric | |
| 7 | 339228X1 | 2 | Screw Metric | M8X12 |
| 8 | 339375X1 | 1 | Lock Washer | |
| 9 | 391074X1 | 1 | Hex. Sock. Screw | Diameter M6X12MM |
| 10 | 3712174M2 | 2 | Tube | |
| 11 | 1695571M91 | 1 | Sediment Bowl | See Page - Reference Number 010-0215/1 |
| 12 | 339761X1 | 2 | Hex. Sock. Screw | Diameter M8X25 |
| 13 | 880961M1 | 2 | Washer | |
| 14 | 884748M1 | 2 | Plug | |
| 15 | 3386294M1 | 1 | Strap | |
| 16 | 3615358M1 | 2 | Hydr Hose | Length 1250MM |
| 17 | 3712465M1 | X | Clamp | |
| 18 | 1440012X1 | 4 | Gasket | |
| 19 | 3714684M1 | 1 | Hydr Hose | Length 270MM |
| 20 | 3582846M1 | 1 | Hose | Length 330MM |
| 21 | 3780426M1 | 1 | Hydr Hose | Length 750MM |
| 22 | 339124X1 | 1 | Hex. Sock. Screw | M8X16 |
| 23 | 3701687M1 | 1 | Clip | |
| 24 | 3714288M1 | 1 | Harness | Length 2800MM |
| 25 | 3619622M1 | X | Cable Tie | |
| 26 | 3582830M1 | 1 | Flowmeter | |
| 27 | 3582832M1 | 4 | Spacer | |
| 28 | 3389410M1 | 4 | Grommet | |
| 29 | 3777280M1 | 1 | Support | |
| 30 | 3010670X1 | 1 | Grommet | |

1-AC13-600-A

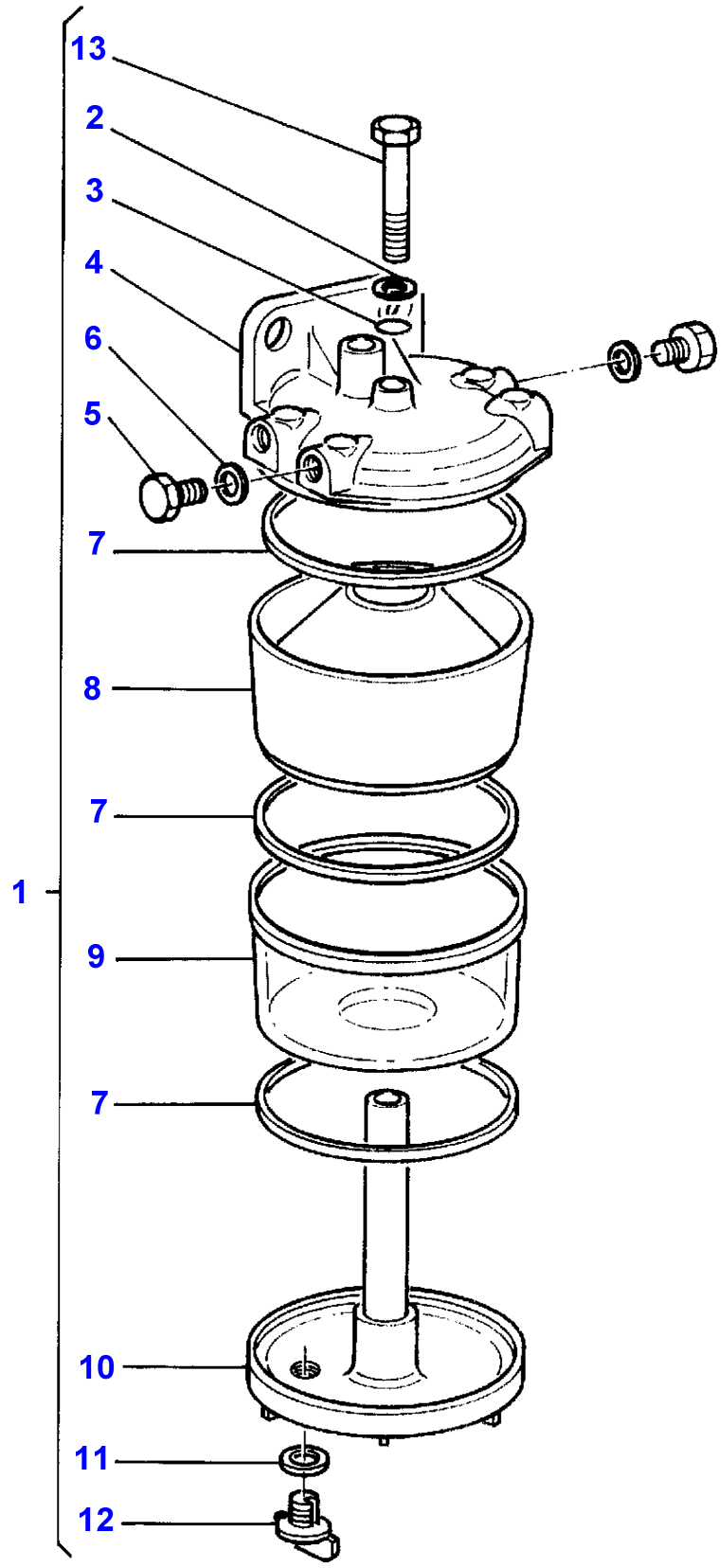

| Item | Part Number | Qty | Description | Comments |
|---|---|---|---|---|
| 1 | 1695571M91 | 1 | Sediment Bowl | |
| 2 | 1851889M1 | 1 | Washer | (1) |
| 3 | **1001833M1** | 1 | O Ring | (1) |
| 4 | | 1 | Filter Head | (1) Not serviced,order REF.1 |
| 5 | 884748M1 | 2 | Plug | (1) Replace and repair. Old not interchangeable with new 1871779M1 |
| 6 | 880961M1 | 2 | Washer | (1) Replace and repair. Old not interchangeable with new 1871780M1 |
| 7 | 1851891M1 | 3 | Gasket | (1) |
| 8 | 1093896M1 | 1 | Element | (1) |
| 9 | 1024386M1 | 1 | Body | (1) |
| 10 | | 1 | Bottom | (1) Not serviced,order REF.1 |
| 11 | 1094155M1 | 1 | Gasket | (1) |
| 12 | 1094154M91 | 1 | Plug | (1) |
| 13 | 354604X1 | 1 | Bolt Unc | (1) |

1-AC26-611-A

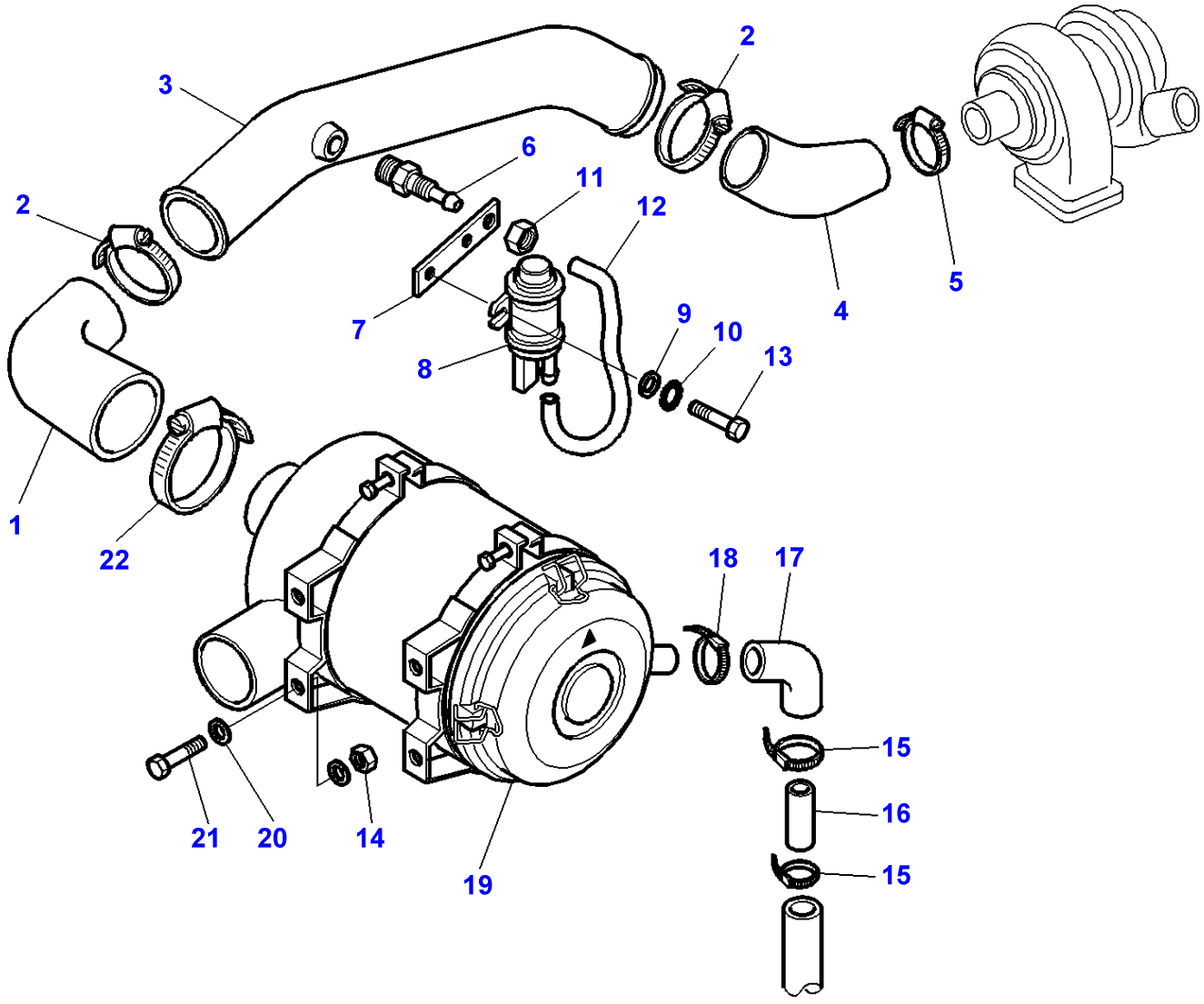

| Item | Part Number | Qty | Description | Comments |
|---|---|---|---|---|
| 1 | **3780823M2** | 1 | Hose | |
| 2 | 3010159X1 | 2 | Clamp | Diameter 100/125 |
| 3 | **3777279M1** | 1 | Tube | |
| 4 | 3713183M1 | 1 | Hose | |
| 5 | 3010156X1 | 1 | Clamp | Diameter 70/90 |
| 6 | 3778309M1 | 1 | Breather | |
| 7 | 3778310M1 | 1 | Support | |
| 8 | **72507188** | 1 | Switch | |
| 9 | 3001856X1 | 2 | Washer Metric | |
| 10 | 3006154X1 | 2 | Washer | |
| 11 | 339169X1 | 1 | Nut | |
| 12 | 3780509M1 | 1 | Tube | |
| 13 | 3009532X1 | 2 | Screw | M4X16 |
| 14 | 339169X1 | 4 | Nut | |
| 15 | 338615X1 | 2 | Clamp | Diameter 25/40 |
| 16 | 3777309M1 | 1 | Tube | |
| 17 | 3780821M1 | 1 | Hose | |
| 18 | 338617X1 | 1 | Clamp | Diameter 40/60 |
| 19 | 3780822M1 | 1 | Air Filter | |
| 20 | 390972X1 | 8 | Washer Metric | |
| 21 | 339009X1 | 4 | Hex. Sock. Screw | M8X35 |
| 22 | 3010162X1 | 1 | Clamp | Diameter 130/155 |

1-AC20-610-A

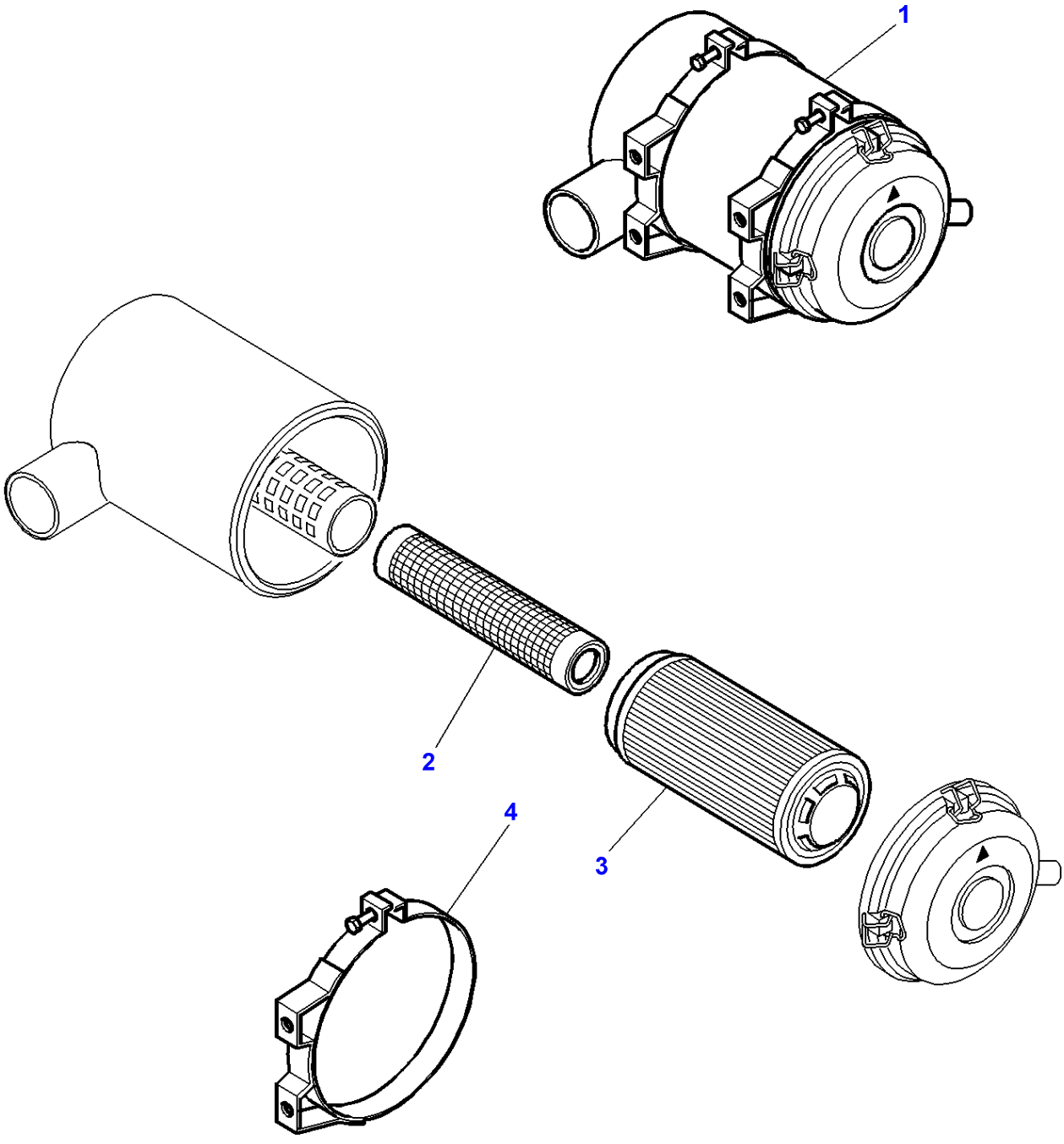

| Item | Part Number | Qty | Description | Comments |
|---|---|---|---|---|
| 1 | 3780822M1 | 1 | Air Filter | |
| 2 | **3903031M1** | 1 | Filter Insert | (1) |
| 3 | **3903030M1** | 1 | Filter Insert | (1) |
| 4 | **3780958M1** | 2 | Clamp | (1) |

1-AC11-627-A

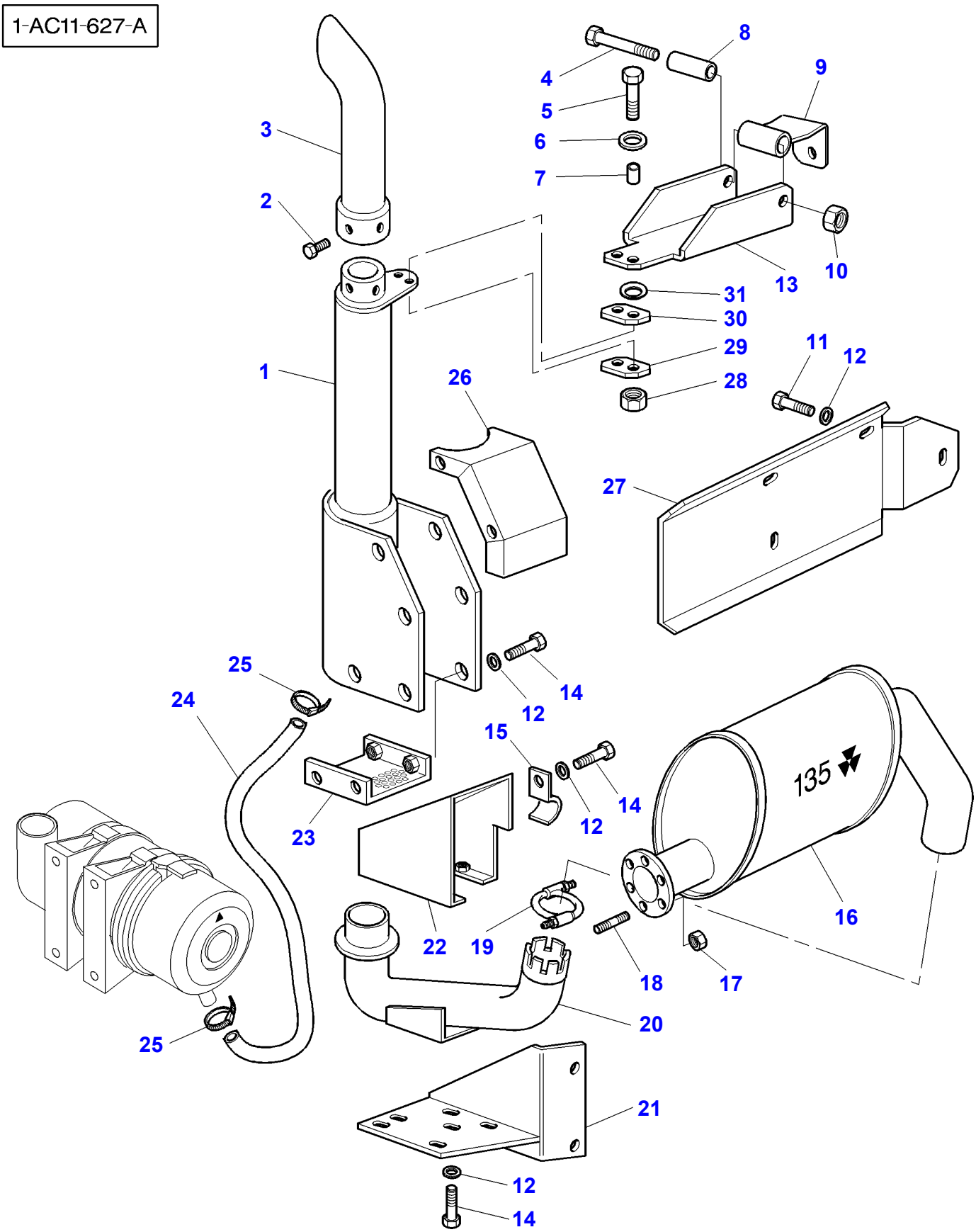
1
2
3
4
5
6
7
8
9
10
11
12
13
14
15
16
17
18
19
20
21
22
23
24
25
26
27
28
29
30
31
135

| Item | Part Number | Qty | Description | Comments |
|---|---|---|---|---|
| 1 | 3713949M5 | 1 | Tube | |
| 2 | 391074X1 | 2 | Hex. Sock. Screw | M6X12 |
| 3 | **3714356M4** | 1 | Tube | |
| 4 | 3009515X1 | 1 | Bolt Metric | M12X80 |
| 5 | 339337X1 | 2 | Hex. Sock. Screw | M8X30 |
| 6 | 391039X1 | 2 | Washer Metric | |
| 7 | 3778809M1 | 2 | Spacer | |
| 8 | 3777839M1 | 1 | Vibration Mount | |
| 9 | 3777838M3 | 1 | Support | |
| 10 | 1442190X1 | 1 | Locknut | |
| 11 | 339228X1 | 4 | Screw Metric | M8X12 |
| 12 | 390972X1 | 16 | Washer Metric | |
| 13 | 3777837M1 | 1 | Strap | |
| 14 | 339123X1 | 14 | Hex. Sock. Screw | M8X20 |
| 15 | 3713805M1 | 1 | Bridle | |
| 16 | 3777286M1 | 1 | Silencer | 135 |
| 17 | 3010572X1 | 6 | Nut | |
| 18 | 1440022X1 | 6 | Stud | M8X20 |
| 19 | **3715855M1** | 1 | Clamp | |
| 20 | **3777287M2** | 1 | Tube | |
| 21 | 3777284M1 | 1 | Support | |
| 22 | 3777302M1 | 1 | Cowl | |
| 23 | 3713777M1 | 1 | Cowl | |
| 24 | 3778882M1 | 1 | Tube | Length 3450MM |
| 25 | 338615X1 | 2 | Clamp | Diameter 25-40 |
| 26 | 3713771M1 | 1 | Cover | |
| 27 | 3777288M1 | 1 | Cowl | |
| 28 | 1441461X1 | 2 | Locknut | |
| 29 | 3778090M1 | 1 | Tappet Plate | |
| 30 | 3778063M2 | 1 | Tappet Plate | |
| 31 | 3714124M1 | 2 | Washer | |

1-AC14-600-D

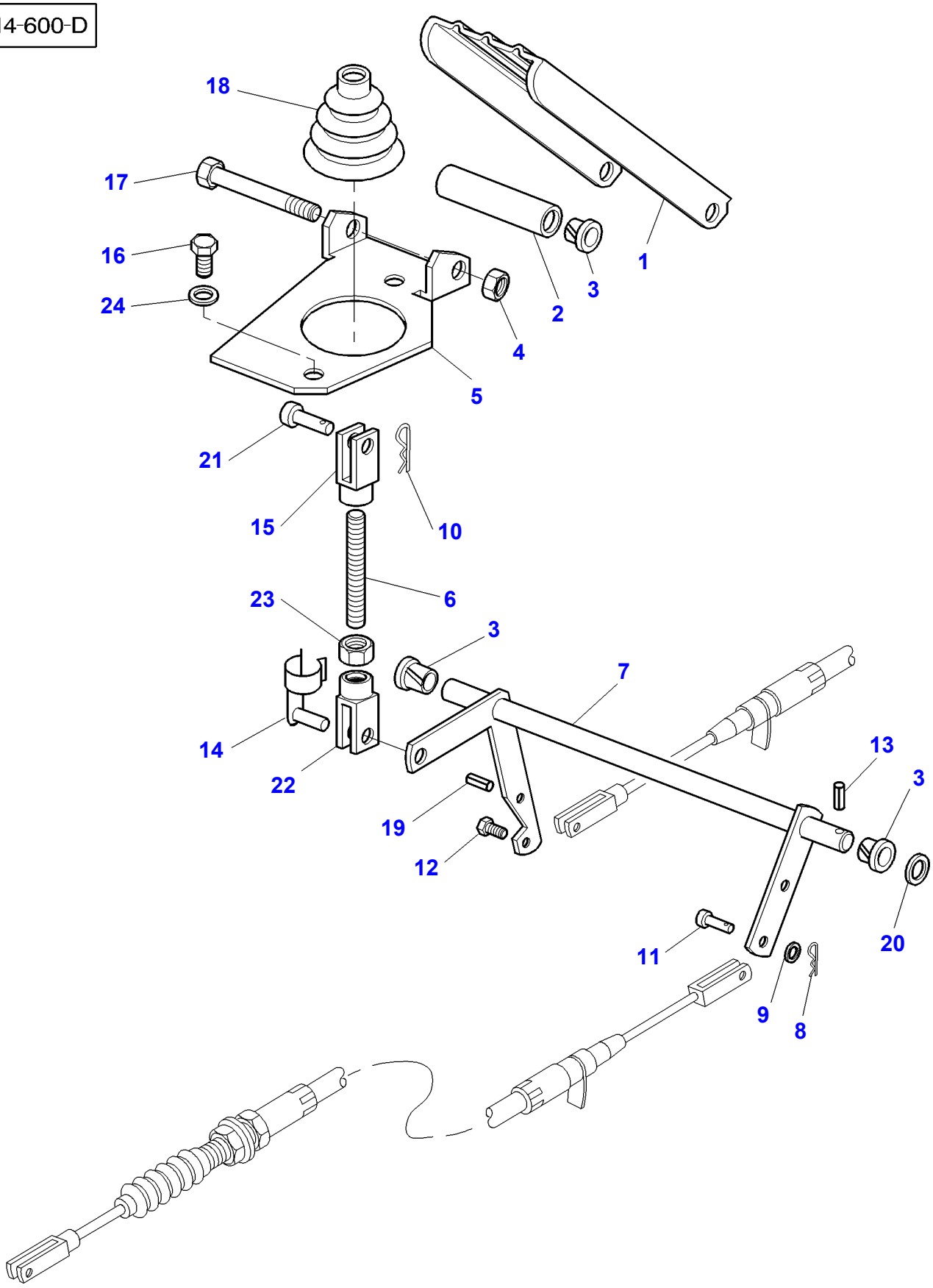

| Item | Part Number | Qty | Description | Comments |
|---|---|---|---|---|
| 1 | 3712851M91 | 1 | Pedal | |
| 2 | 3712867M1 | 1 | Spacer | |
| 3 | 3385913M2 | 4 | Bush | |
| 4 | 1441461X1 | 1 | Locknut | |
| 5 | 3712852M2 | 1 | Support | |
| 6 | 3712866M2 | 1 | Stem | |
| 7 | 3779453M91 | 1 | Rod | [B] |
| 8 | 357145X1 | 1 | Pin | |
| 9 | 390971X1 | 1 | Washer | |
| 10 | 357145X1 | 1 | Pin | |
| 11 | 3007850X1 | 1 | Clevis Pin | |
| 12 | 391883X1 | 1 | Screw | M5X25 |
| 13 | 357146X1 | 1 | Pin | |
| 14 | 3713042M1 | 1 | Clevis Pin | |
| 15 | 3009130X1 | 1 | Clevis | |
| 16 | 339124X1 | 2 | Hex. Sock. Screw | M8X16 |
| 17 | 391286X1 | 1 | Bolt Metric | M8X85 |
| 18 | 3712886M1 | 1 | Bellows | |
| 19 | 339548X1 | 1 | Pin | |
| 20 | 1444351X1 | 1 | Washer | |
| 21 | 392235X1 | 1 | Clevis Pin | |
| 22 | 392463X1 | 1 | Clevis | |
| 23 | 339030X1 | 1 | Nut Metric | M6 |
| 24 | 390972X1 | 2 | Washer Metric | |

**FOOTNOTE [A]** WITH DYNASHIFT
**FOOTNOTE [B]** WITH FULL POWERSHIFT
**FOOTNOTE [C]** TRACTOR WITH PLATFORM

1-AC14-619-A

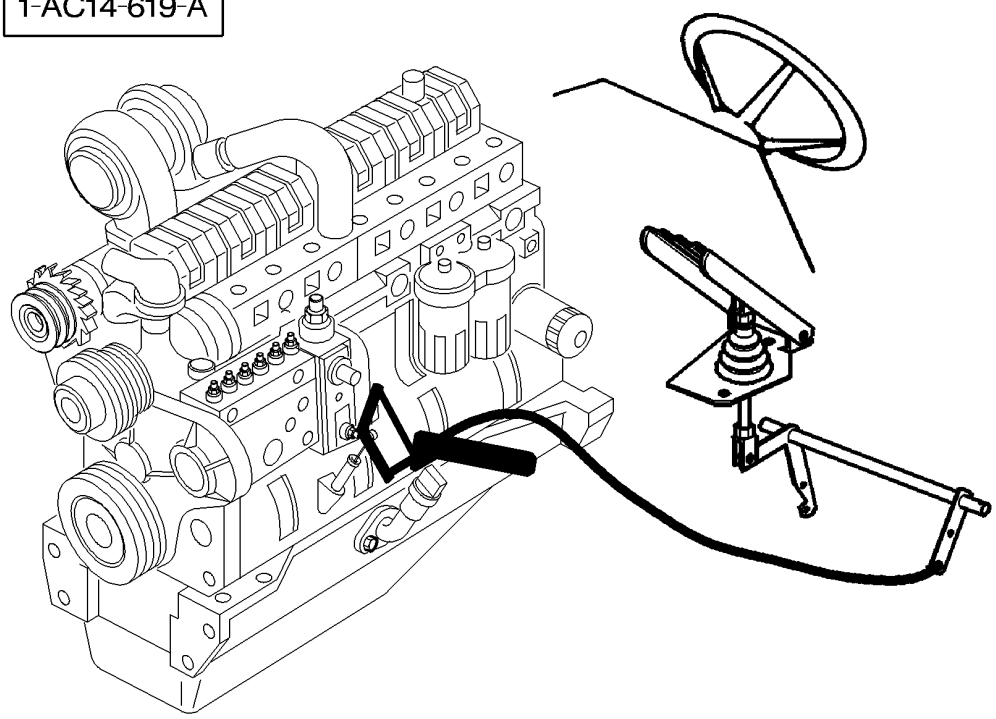

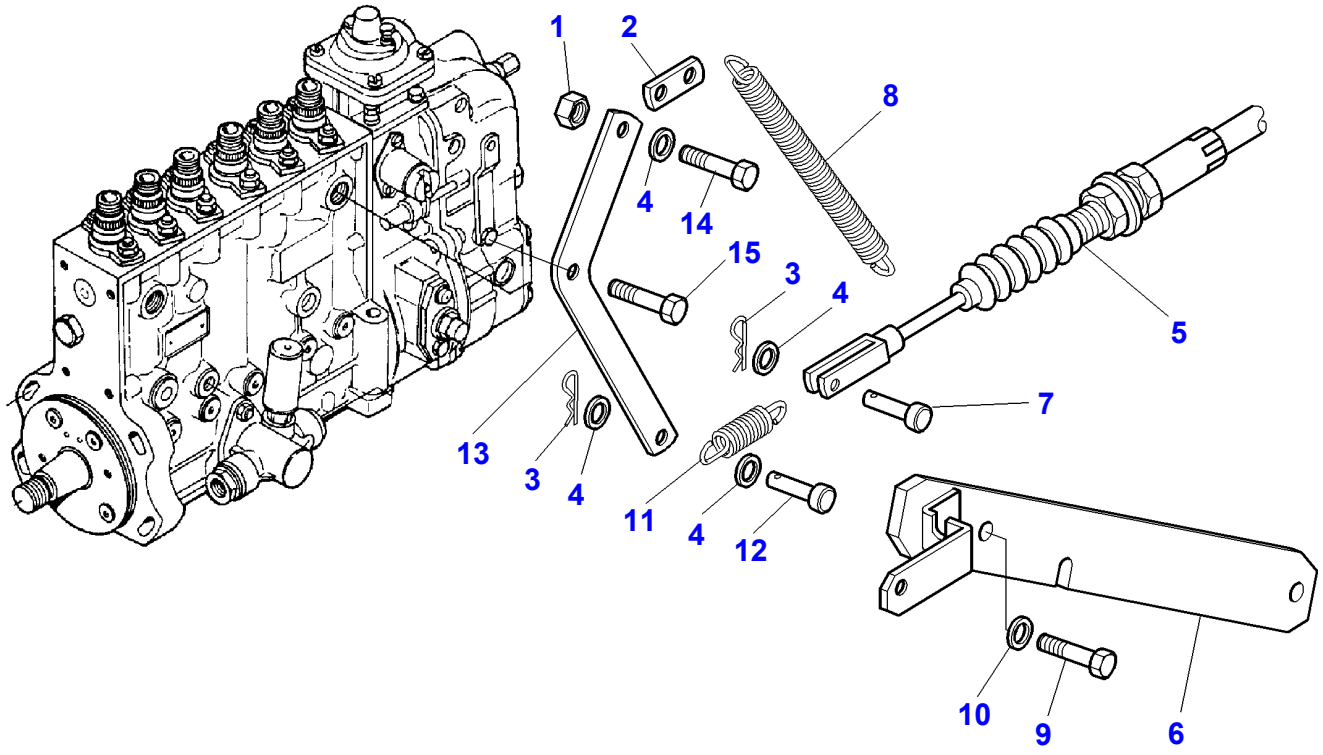

| Item | Part Number | Qty | Description | Comments |
|---|---|---|---|---|
| 1 | 339030X1 | 1 | Nut Metric | |
| 2 | 1660774M2 | 1 | Lug | |
| 3 | 357145X1 | 2 | Pin | |
| 4 | 390971X1 | 4 | Washer | |
| 5 | 3713025M6 | 1 | Cable | Length 955MM |
| 6 | 3781439M91 | 1 | Support | |
| 7 | 832297M1 | 1 | Clevis Pin | |
| 8 | 3615253M1 | 1 | Spring | |
| 9 | 339124X1 | 2 | Hex. Sock. Screw | M8X16 |
| 10 | 390972X1 | 2 | Washer Metric | |
| 11 | 3387022M2 | 1 | Spring | |
| 12 | 3007850X1 | 1 | Clevis Pin | |
| 13 | 3580837M2 | 1 | Lever | |
| 14 | 339666X1 | 1 | Hex. Sock. Screw | M6X20 |
| 15 | 339262X1 | 1 | Bolt Metric | M6X30 |

1-AC14-613-C

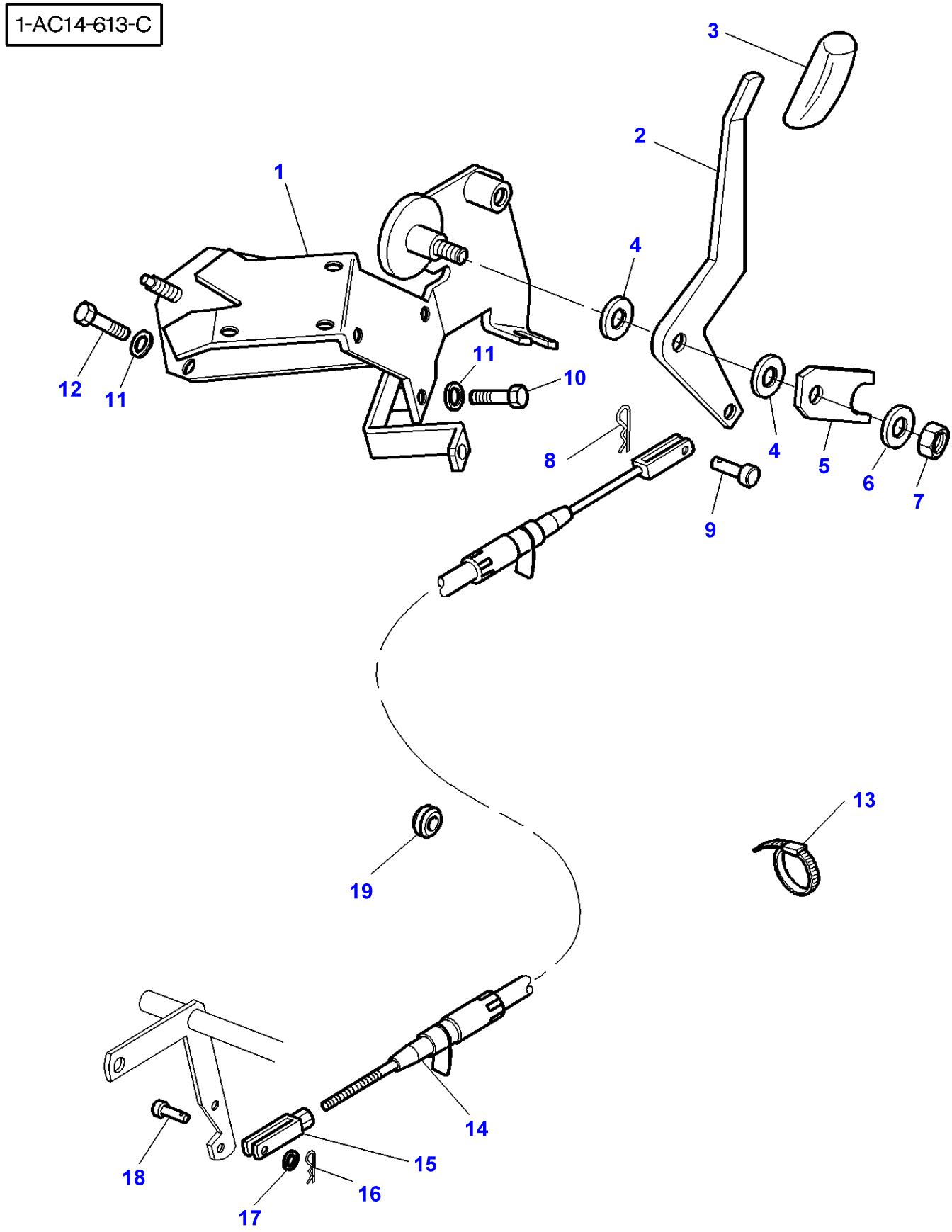

| Item | Part Number | Qty | Description | Comments |
|---|---|---|---|---|
| 1 | 3778645M94 | 1 | Support | |
| 2 | 3778583M2 | 1 | Lever | |
| 3 | 3777015M1 | 1 | Handle | |
| 4 | 3042581M2 | 2 | Washer | |
| 5 | 3712271M1 | 1 | Plate | |
| 6 | 880712M1 | 1 | Washer | |
| 7 | 1440330X1 | 1 | Locknut | M12 |
| 8 | 357145X1 | 1 | Pin | |
| 9 | 3007850X1 | 1 | Clevis Pin | |
| 10 | 339368X1 | 1 | Bolt Metric | M8X60 |
| 11 | 390972X1 | 3 | Washer Metric | |
| 12 | 339368X1 | 1 | Bolt Metric | M8X60 |
| 13 | 3619622M1 | 1 | Cable Tie | |
| 14 | 3778639M1 | 1 | Cable | Length 855MM |
| 15 | 3616399M1 | 1 | Stirrup | |
| 16 | 357145X1 | 1 | Pin | |
| 17 | 390971X1 | 1 | Washer | |
| 18 | 832297M1 | 1 | Clevis Pin | |
| 19 | 1699748M1 | 1 | Plug | Diameter 9,5MM |
| | 3042523M1 | 1 | Plug | Diameter 10MM |
| 20 | 3010772X1 | 2 | Screw | [A] M12X20 |

**FOOTNOTE [A]** NOT ILLUSTRATED

| Page Title | Page Number |
|---|---|
| Flywheel | 020-0005 |
| Engine - Transmission Assembling | 020-0010 |
| Clutch Pedal And Linkage | 020-0015 |

1-AA07-007-A

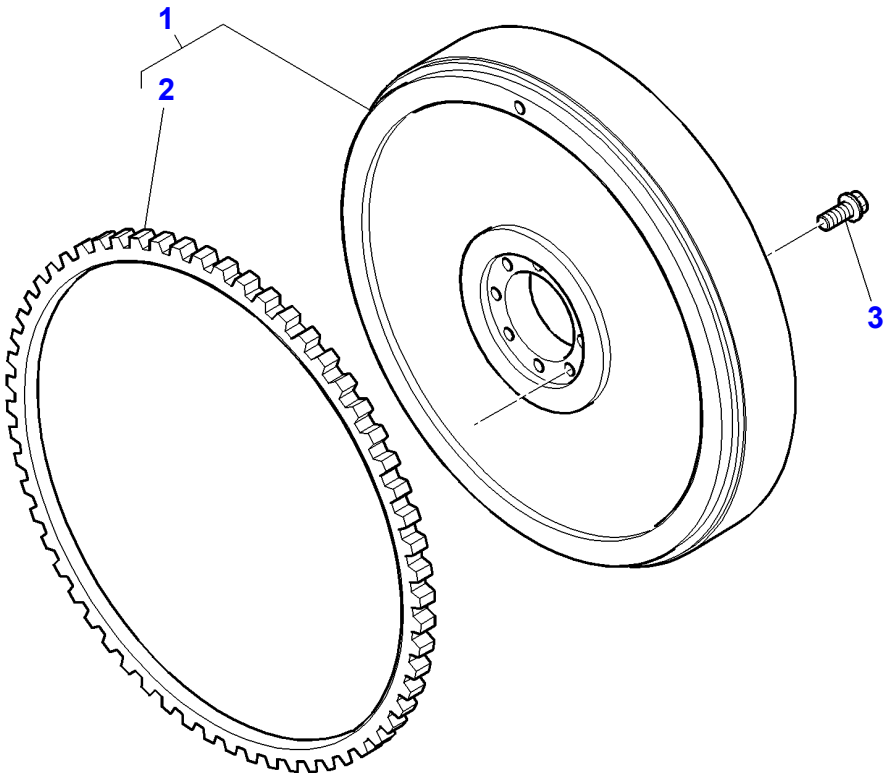

| Item | Part Number | Qty | Description | Comments |
|---|---|---|---|---|
| 1 | 3716931M91 | 1 | Flywheel | |
| 2 | 1619032M1 | 1 | Crownwheel | (1)<br>Number of teeth/spines 132 |
| 3 | 3010025X1 | 8 | Screw | M14X45 |

1-AD12-602-A

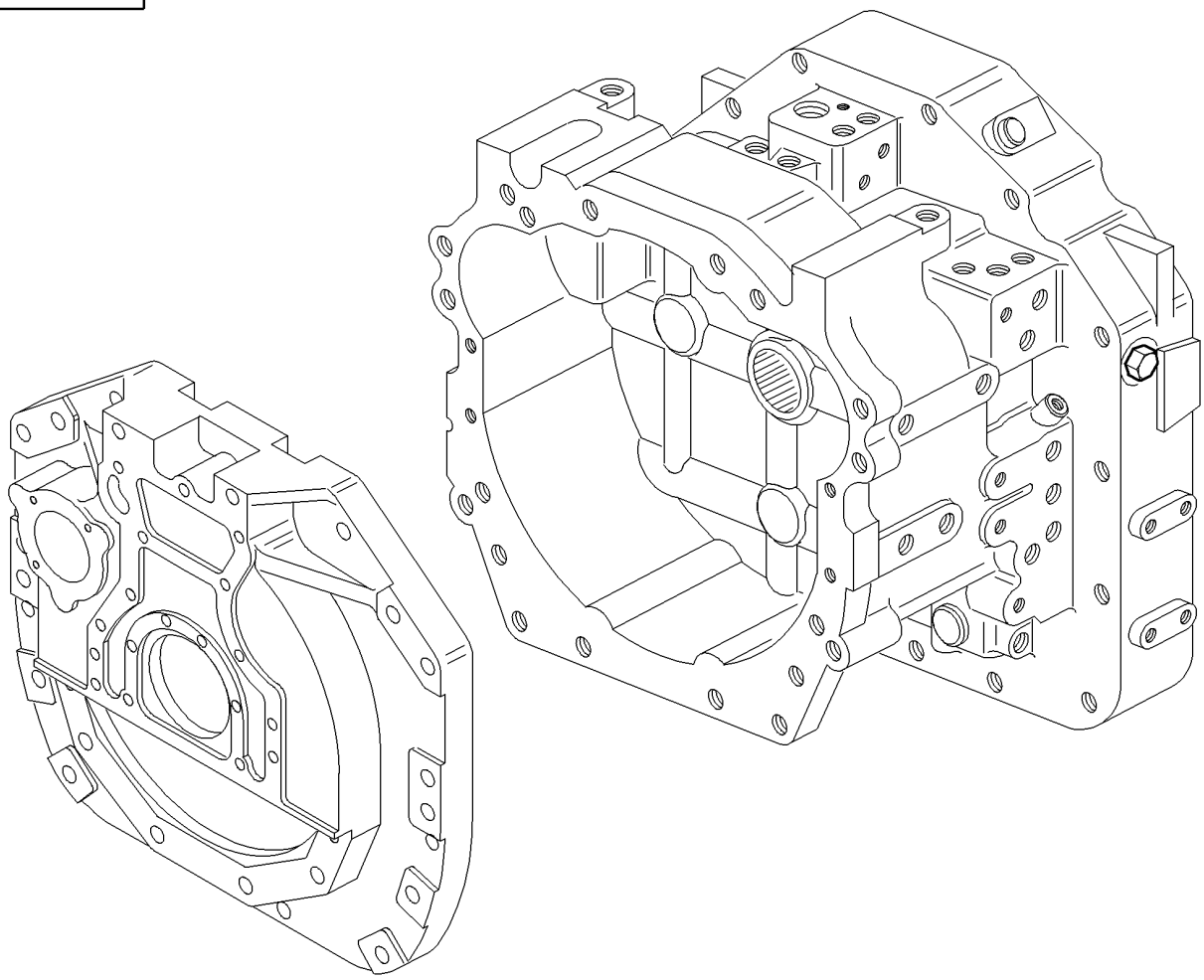

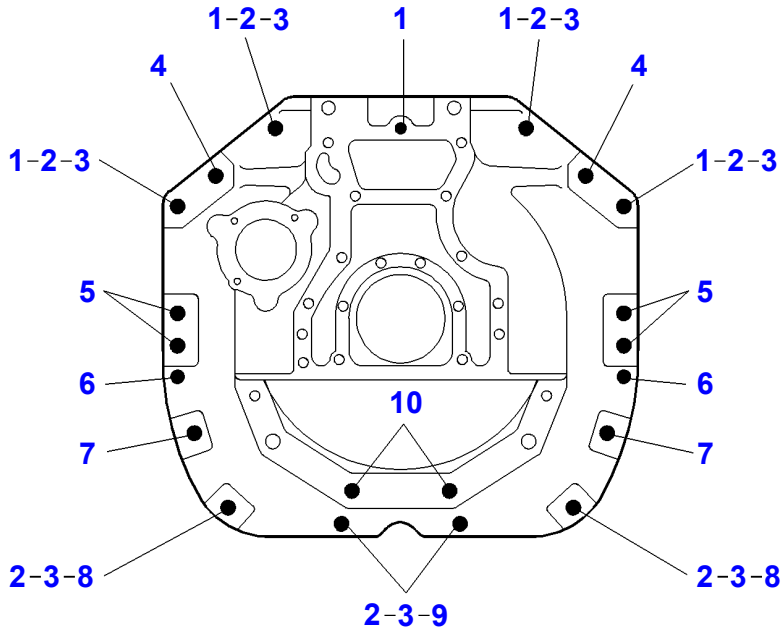

| Item | Part Number | Qty | Description | Comments |
|---|---|---|---|---|
| 1 | 3010563X1 | 5 | Screw | M20X90 |
| 2 | 385365X1 | 8 | Washer | Up to Serial or Engine Number H022012 |
| | 385365X1 | 14 | Washer | From Serial or Engine Number H022013 |
| 3 | 3009746X1 | 8 | Nut | Up to Serial or Engine Number H022012 |
| | 3009746X1 | 14 | Nut | From Serial or Engine Number H022013 |
| 4 | 3010556X1 | 2 | Screw Metric | M20X70 |
| 5 | 3010575X1 | 4 | Screw | M20X130 Up to Serial or Engine Number H022012 |
| | 3010850X1 | 4 | Screw | M20X170 From Serial or Engine Number H022013 |
| 6 | 3714795M1 | 2 | Centraliser | |
| 7 | 3010558X1 | 2 | Screw Metric | M20X120 Up to Serial or Engine Number H022012 |
| | 3010575X1 | 2 | Screw | M20X130 From Serial or Engine Number H022013 |
| 8 | 3010557X1 | 2 | Screw Metric | M20X100 |
| 9 | 3009264X1 | 2 | Screw Metric | M20X130 |
| 10 | 3580796M1 | 2 | Screw | M22X100 |

1-AD06-610-B

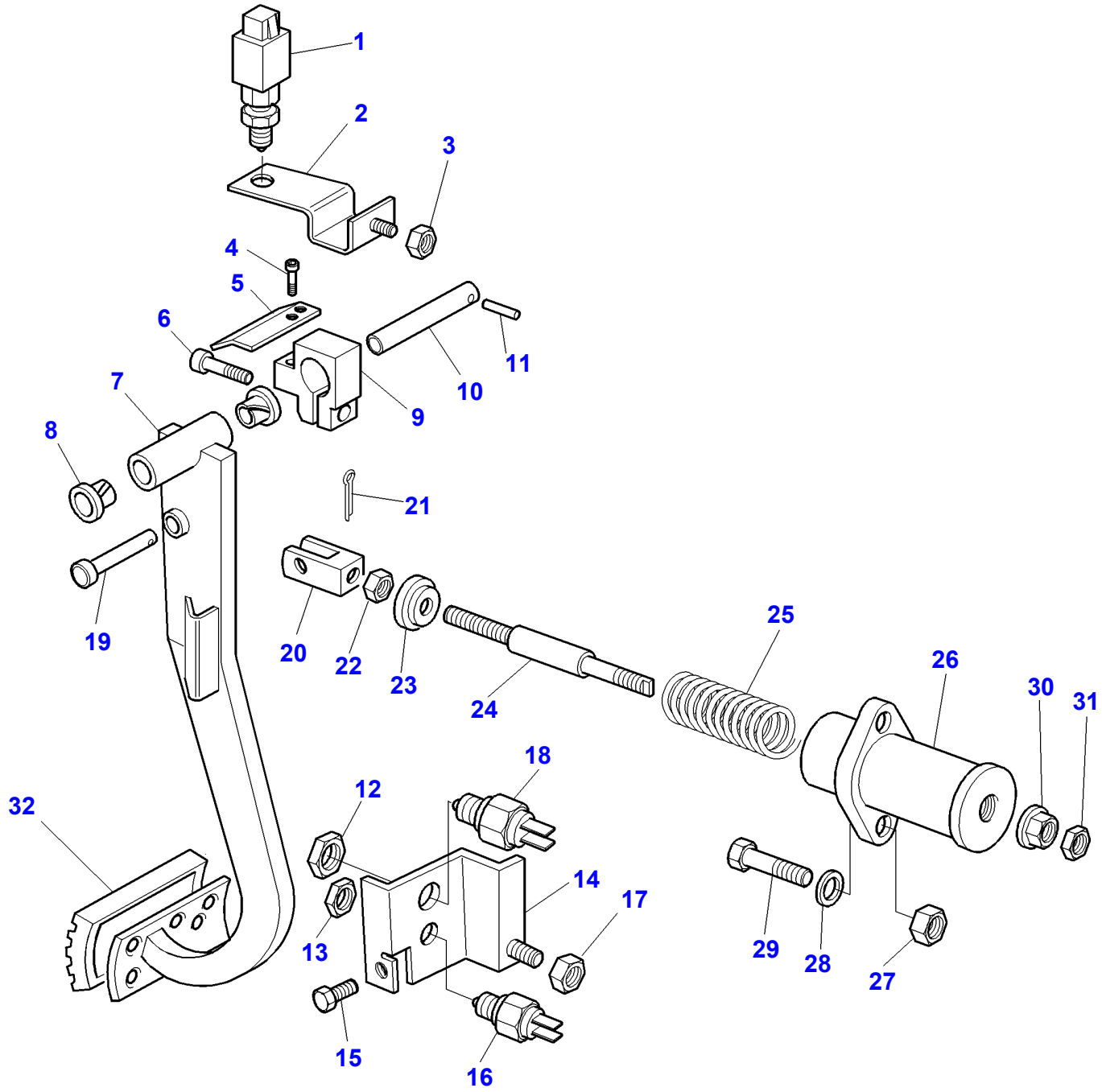
1
2
3
4
5
6
7
8
9
10
11
19
20
21
22
23
24
25
26
27
28
29
30
31
32
12
13
14
15
16
17
18

| Item | Part Number | Qty | Description | Comments |
|---|---|---|---|---|
| 1 | **3777157M1** | 1 | Transmitter | |
| 2 | 3777151M92 | 1 | Support | |
| 3 | 339030X1 | 1 | Nut Metric | M6 |
| 4 | 3019880X1 | 2 | Screw Metric | M4x12 |
| 5 | 3778867M1 | 1 | Shield | |
| 6 | 391989X1 | 1 | Screw Metric | M8x20 |
| 7 | 3777150M2 | 1 | Pedal | |
| 8 | 3385604M1 | 2 | Bearing | |
| 9 | 3778866M1 | 1 | Clamp | |
| 10 | 3384658M1 | 1 | Clevis Pin | Diameter 15 MM |
| 11 | 391290X1 | 1 | Pin | Diameter 5 MM<br>Length 30 MM |
| 12 | 339495X1 | 1 | Nut | M16 |
| 13 | 339571X1 | 1 | Nut Metric | M14 |
| 14 | 3778364M91 | 1 | Stop | |
| 15 | 339228X1 | 1 | Screw Metric | M8x12 |
| 16 | **3780580M1** | 1 | Switch,Indirect | Replace and repair. Old interchangeable with new 3777686M1 |
| 17 | 339169X1 | 1 | Nut | M8 |
| 18 | **3778375M2** | 1 | Switch,Indirect | |
| 19 | 3019213X1 | 1 | Clevis Pin | Diameter 12 MM |
| 20 | 3384656M1 | 1 | Clevis | |
| 21 | 357146X1 | 1 | Pin | Diameter 3 MM<br>Length 25 MM |
| 22 | 392310X1 | 1 | Nut Metric | M10 |
| 23 | 3777155M1 | 1 | Washer | |
| 24 | 3777154M1 | 1 | Pushrod | |
| 25 | 3777156M1 | 1 | Spring | |
| 26 | 3777153M1 | 1 | Guide | |
| 27 | 339169X1 | 2 | Nut | M8 |
| 28 | 390972X1 | 2 | Washer Metric | Diameter 8 MM<br>Diameter 17 MM<br>Thickness 1,7 MM |
| 29 | 339123X1 | 2 | Hex. Sock. Screw | M8x20 |
| 30 | 3019125X1 | 1 | Nut | M10 |
| 31 | 392310X1 | 1 | Nut Metric | M10 |
| 32 | 1626321M2 | 1 | Skate | |

| Page Title | Page Number |
|---|---|
| Gear Box Full Power Shift - Input Shaft | 025-0005 |
| Gear Box Full Power Shift | 025-0010 |
| Gear Box Full Power Shift | 025-0015 |
| Gear Box Full Power Shift - Pressure Control Valve Components | 025-0020 |
| Gear Box Full Power Shift - Pump | 025-0025 |
| Gear Box Full Power Shift - Input Shaft | 025-0030 |
| Gear Box Full Power Shift - 2 nd Gears | 025-0035 |
| Gear Box Full Power Shift - 3 rd Gears | 025-0040 |
| Gear Box Full Power Shift - 4 th Gears | 025-0045 |
| Gear Box Full Power Shift - 5 th Gears | 025-0050 |
| Gear Box Full Power Shift - 6 th Gears | 025-0055 |
| Gear Box Full Power Shift - 7 th Gears | 025-0060 |
| Epicyclic Unit - Creeper Gear | 025-0065 |
| Creeper Gearbox Control | 025-0070 |
| Transmission - Output Shaft | 025-0075 |
| Controle Full Powershift | 025-0080 |
| Controle Full Powershift - With Electronic Lift | 025-0085 |
| Full Powershift - Electrovalves - Cowl | 025-0090 |

1-AF61-004-A

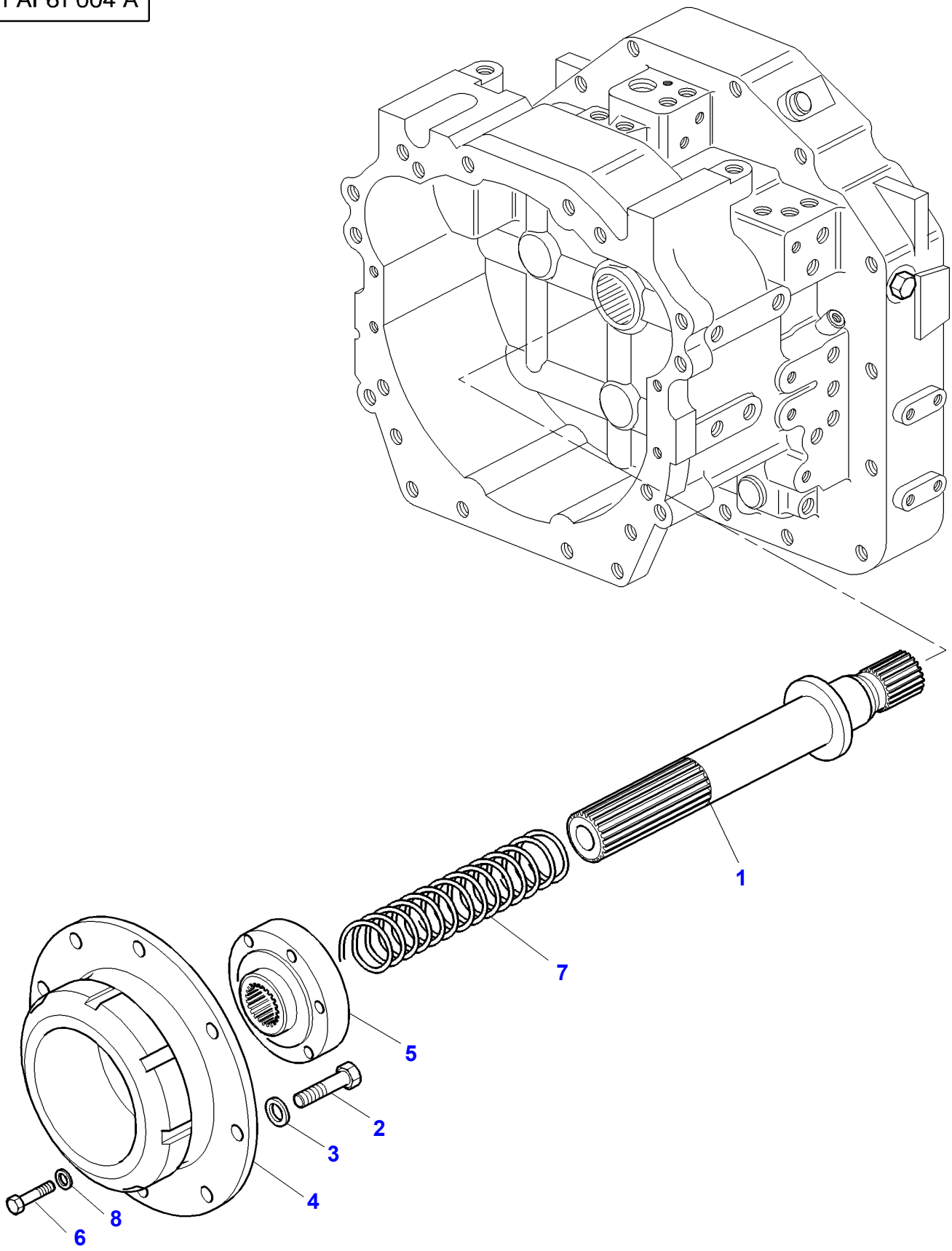

| Item | Part Number | Qty | Description | Comments |
|---|---|---|---|---|
| 1 | 3716015M3 | 1 | Shaft | |
| 2 | 3010801X1 | 8 | Screw Metric | M10x45 |
| 3 | 385362X1 | 8 | Washer | M10 |
| 4 | 3716162M1 | 1 | Shock Absorber | |
| 5 | 3716086M2 | 1 | Hub | |
| 6 | 3010783X1 | 6 | Screw Metric | M16x45 |
| 7 | 3716087M1 | 1 | Spring | |
| 8 | 3019575X1 | 6 | Washer Metric | M16 |

1-AF60-004-C

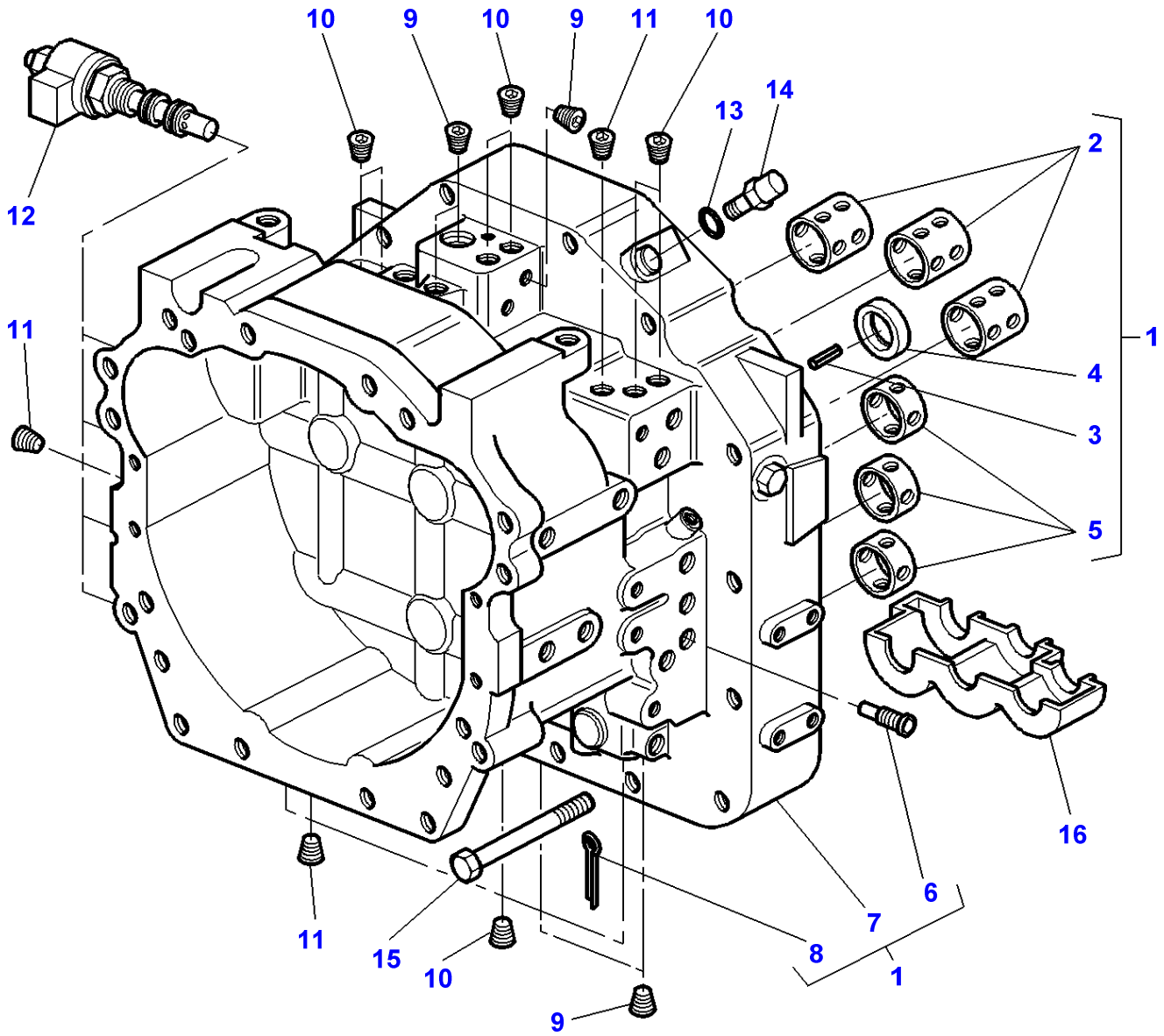

| Item | Part Number | Qty | Description | Comments |
|---|---|---|---|---|
| 1 | 3779367M91 | 1 | Housing | |
| 2 | 3779206M1 | 3 | Bush | (1) |
| 3 | 3779215M1 | 1 | Plug | (1) |
| 4 | 3779208M1 | 1 | Gasket | (1) |
| 5 | 3779207M1 | 3 | Bush | (1) |
| 6 | **3779283M91** | 1 | Pressure Valve | (1) |
| 7 | 3779365M1 | 1 | Housing | (1) |
| 8 | 3779224M1 | 1 | Pin | (1) |
| 9 | 3779308M1 | 5 | Plug | |
| 10 | 3779242M1 | 11 | Plug | Diameter 7/16" |
| 11 | 3779234M1 | 6 | Plug | Diameter 9/16" |
| 12 | **3779284M91** | 4 | Solenoid | |
| 13 | 3779222M1 | 1 | O Ring | |
| 14 | **3779280M1** | 1 | Eng.Speed Sensor | [A] |
| 15 | 3779318M1 | 18 | Screw | M16x200 |
| 16 | 3779359M1 | 1 | Deflector | |

**FOOTNOTE [A]** INTERMEDIARY SPEED

1-AF60-005-C

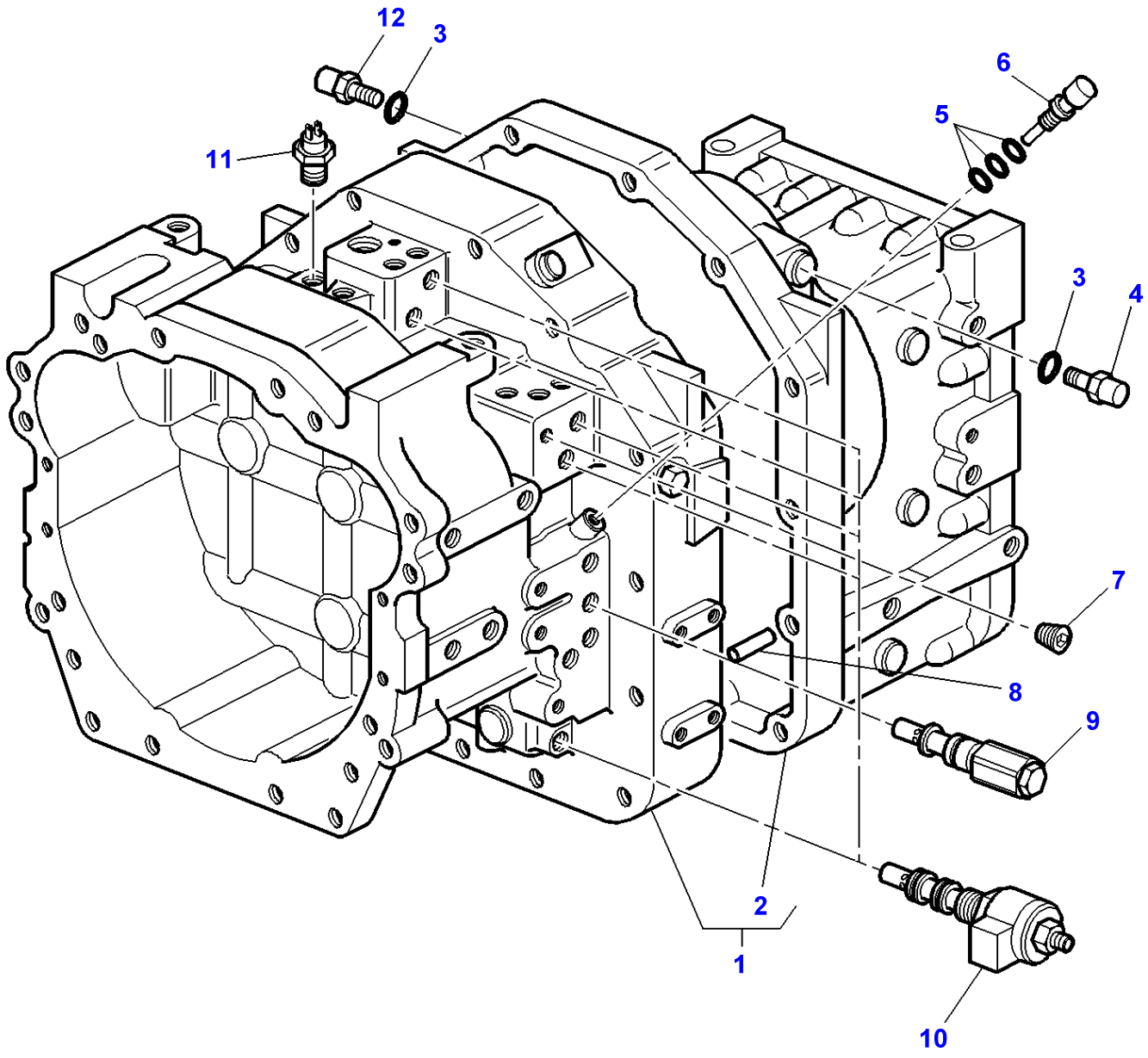

| Item | Part Number | Qty | Description | Comments |
|---|---|---|---|---|
| 1 | 3716349M91 | 1 | Gearbox | |
| 2 | 3779362M1 | 1 | Housing | (1) |
| 3 | 3779222M1 | 2 | O Ring | |
| 4 | **3779280M1** | 1 | Eng.Speed Sensor | [B] |
| 5 | 3779235M1 | 1 | Kit, O Rings | |
| 6 | **3779237M1** | 1 | Transmitter | [A] |
| 7 | 3779234M1 | 1 | Plug | Diameter 9/16" |
| 8 | 3779225M1 | 2 | Locator | |
| 9 | **3779244M91** | 1 | Relief Valve | 260 PSI |
| 10 | **3779284M91** | 5 | Solenoid | |
| 11 | **3381387M4** | 1 | Low Pr.Oil Trmtr | |
| 12 | **3779280M1** | 1 | Eng.Speed Sensor | [C] |

**FOOTNOTE [A]** HEAT
**FOOTNOTE [B]** MOTOR SPEED
**FOOTNOTE [C]** TRAVELLING SPEED

1-AF60-003-A

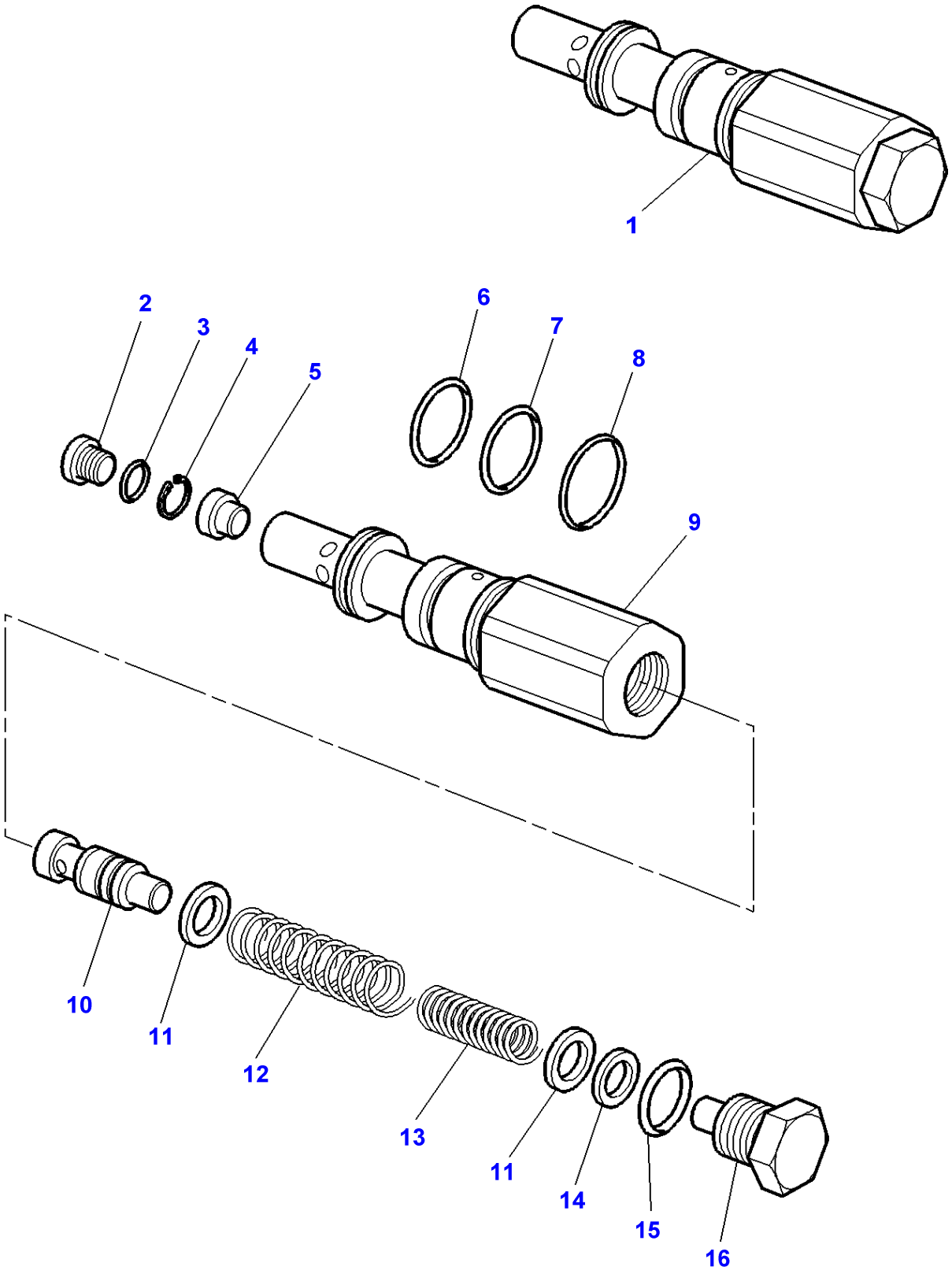

| Item | Part Number | Qty | Description | Comments |
|---|---|---|---|---|
| 1 | **3779244M91** | 1 | Relief Valve | 260 PSI |
| 2 | 3779308M1 | 1 | Plug | (1) |
| 3 | 3779307M1 | 1 | O Ring | (1) |
| 4 | 3779306M1 | 1 | Circlip | (1) |
| 5 | 3779305M1 | 1 | Cover | (1) |
| 6 | 3779315M1 | 1 | O Ring | (1) |
| 7 | 3779316M1 | 1 | O Ring | (1) |
| 8 | 3779317M1 | 1 | O Ring | (1) |
| 9 | 3779303M1 | 1 | Cartridge | (1) |
| 10 | 3779304M1 | 1 | Distributor | (1) |
| 11 | 3779309M1 | 2 | Washer | (1) |
| 12 | 3779311M1 | 1 | Spring | (1) |
| 13 | 3779310M1 | 1 | Spring | (1) |
| 14 | 3779312M1 | 3 | Chock | (1) |
| 15 | 3779313M1 | 1 | O Ring | (1) |
| 16 | 3779314M1 | 1 | Plug | (1) |

1-AF68-001-A

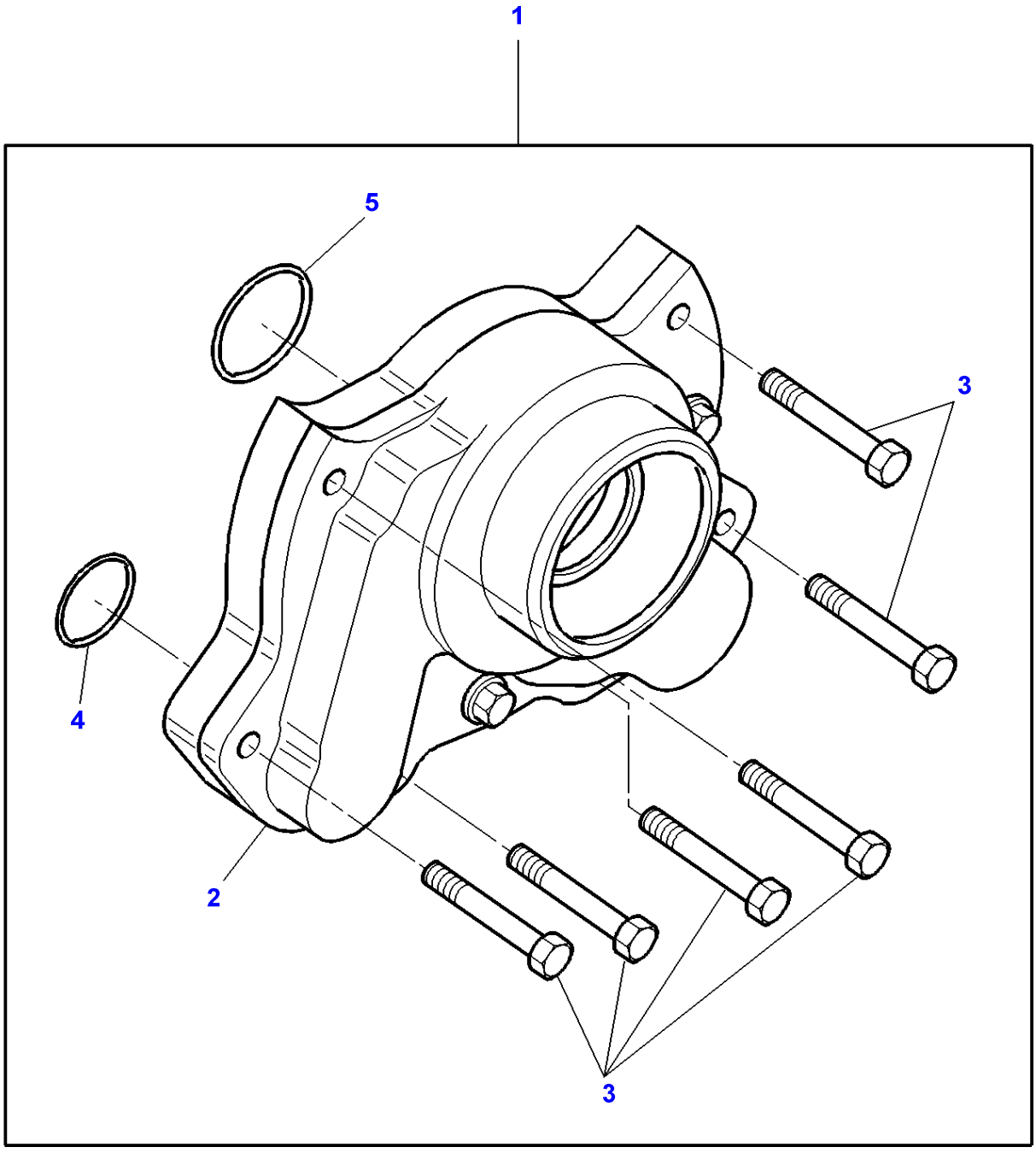

| Item | Part Number | Qty | Description | Comments |
|---|---|---|---|---|
| 1 | 3779272M91 | 1 | Pump | |
| 2 | 3779273M1 | 1 | Pump | (1) |
| 3 | 3779217M1 | 6 | Screw | (1) |
| 4 | 3779227M1 | 1 | O Ring | (1) |
| 5 | 3779228M1 | 1 | O Ring | (1) |

1-AF61-003-A

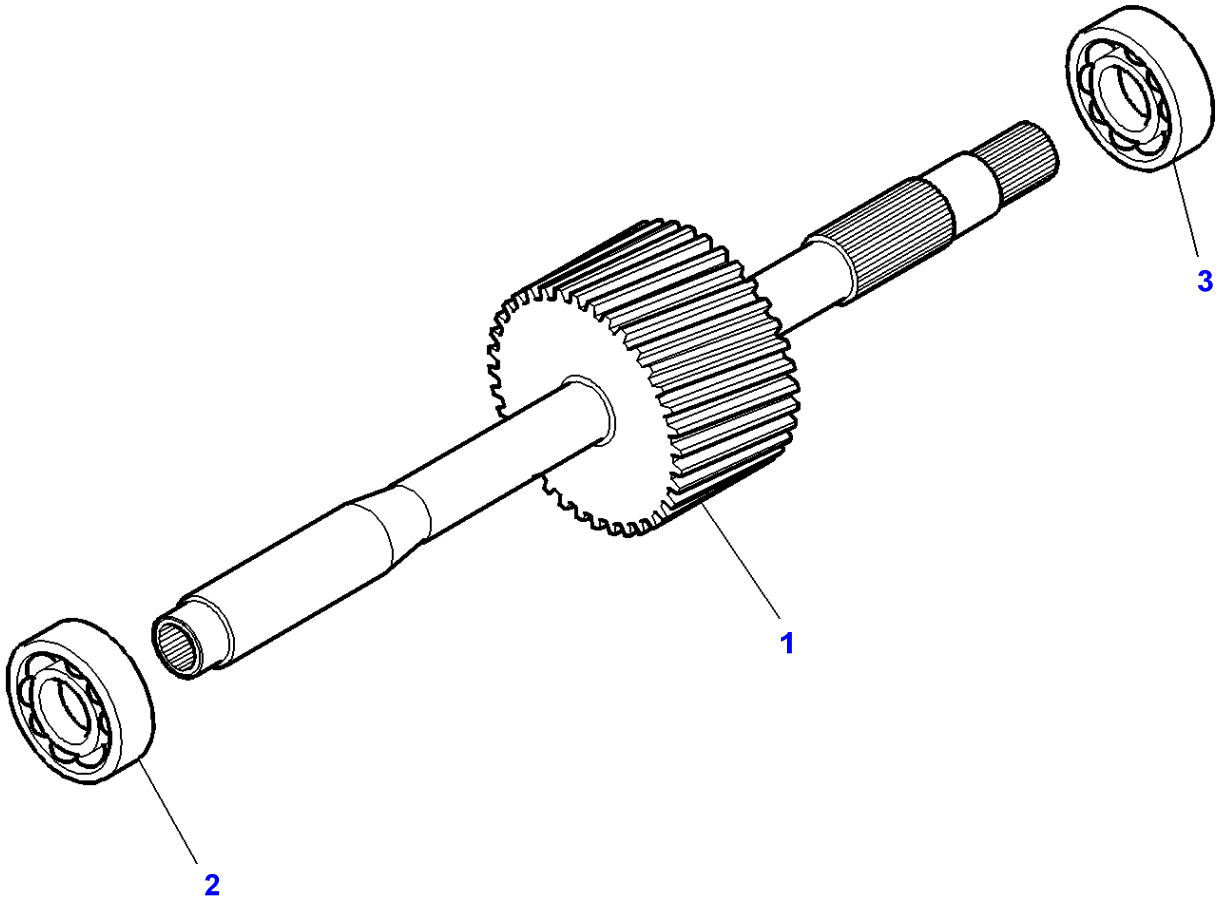

| Item | Part Number | Qty | Description |
|---|---|---|---|
| 1 | 3779363M1 | 1 | Shaft |
| 2 | 3779259M1 | 1 | Bearing Assy |
| 3 | 3779336M1 | 1 | Bearing Assy |

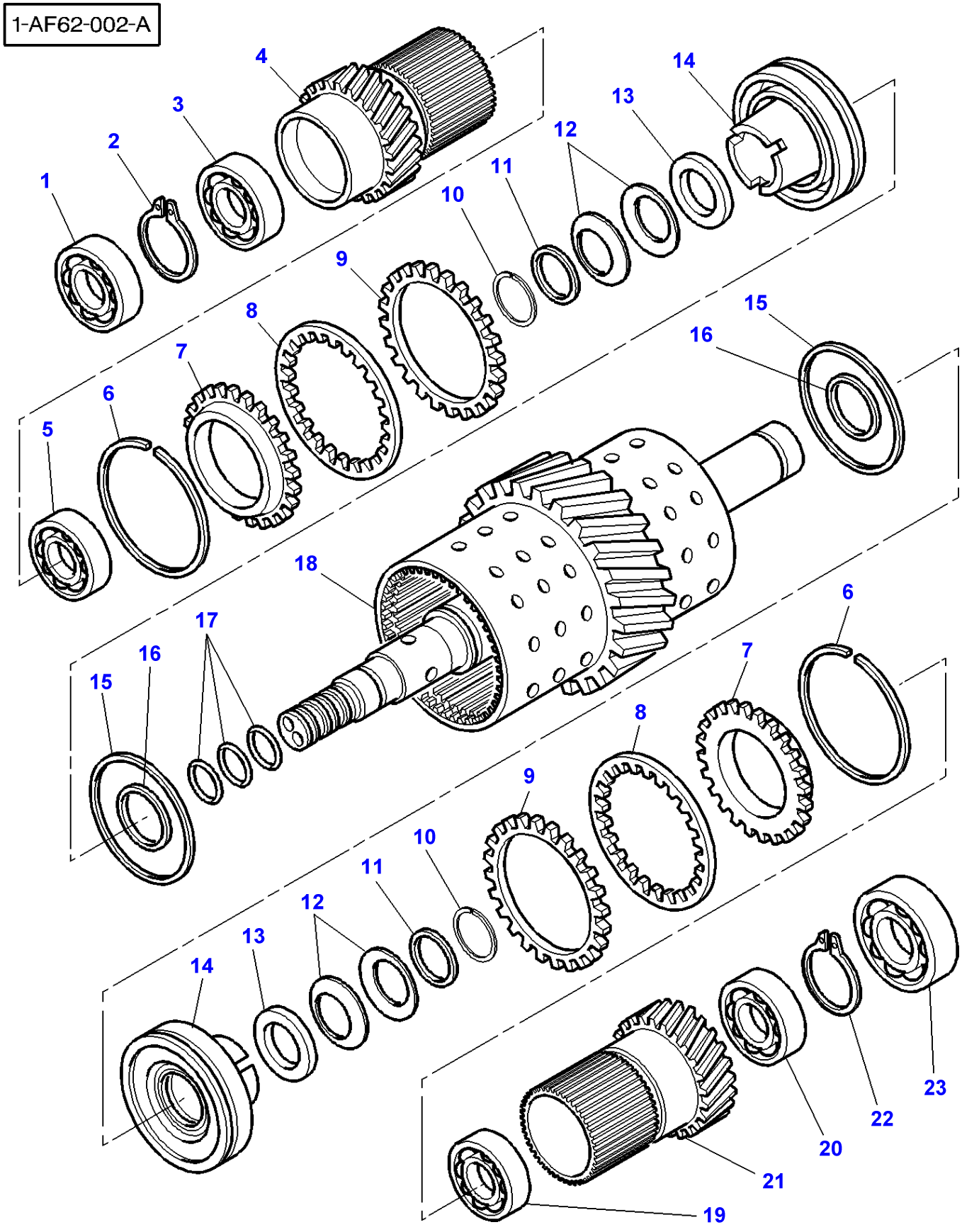
1-AF62-002-A
1
2
3
4
5
6
7
8
9
10
11
12
13
14
15
16
17
18
19
20
21
22
23

| Item | Part Number | Qty | Description | Comments |
|---|---|---|---|---|
| | 3779338M91 | 1 | Kit, Pinion | |
| 1 | 3779336M1 | 1 | Bearing Assy | |
| 2 | 3779231M1 | 1 | Circlip | |
| 3 | 3779259M1 | 1 | Bearing Assy | |
| 4 | 3779335M1 | 1 | Pinion | Number of teeth/spines 48 |
| 5 | 3779334M1 | 1 | Bearing Assy | |
| 6 | 3779326M1 | 2 | Circlip | |
| 7 | 3779330M1 | 2 | Crownwheel | |
| 8 | 3779324M1 | 20 | Disc | |
| 9 | 3779323M1 | 20 | Disc | |
| 10 | 3779322M1 | 2 | Circlip | |
| 11 | 3779360M1 | 2 | Circlip | |
| 12 | 3779328M1 | 12 | Washer | |
| 13 | 3779327M1 | 2 | Washer | |
| 14 | 3779329M1 | 2 | Piston | |
| 15 | 3779325M1 | 2 | Gasket | |
| 16 | 3779319M1 | 2 | O Ring | |
| 17 | 3779220M1 | 3 | Oil Seal | |
| 18 | 3779332M1 | 1 | Shaft | |
| 19 | 3779337M1 | 1 | Bearing Assy | |
| 20 | 3779212M1 | 1 | Bearing Assy | |
| 21 | 3779333M1 | 1 | Pinion | Number of teeth/spines 59 |
| 22 | 3779321M1 | 1 | Circlip | |
| 23 | 3779331M1 | 1 | Bearing Assy | |

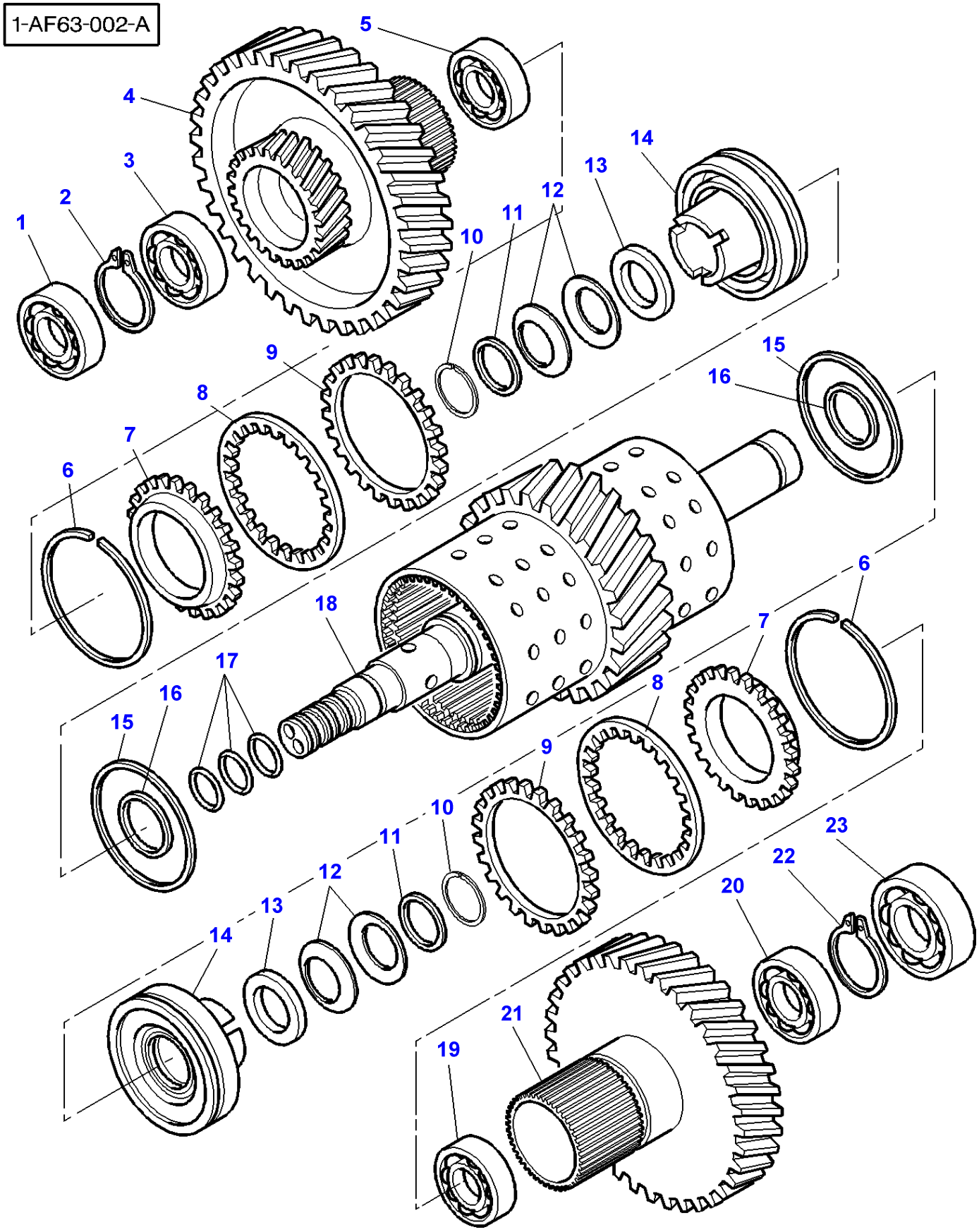
1-AF63-002-A
1
2
3
4
5
6
7
8
9
10
11
12
13
14
15
16
17
18
19
20
21
22
23

| Item | Part Number | Qty | Description | Comments |
|---|---|---|---|---|
| | 3779339M91 | 1 | Kit, Sprocket | |
| 1 | 3779336M1 | 1 | Bearing Assy | |
| 2 | 3779231M1 | 1 | Circlip | |
| 3 | 3779260M1 | 1 | Bearing Assy | |
| 4 | 3779343M1 | 1 | Pinion | |
| 5 | 3779342M1 | 1 | Bearing Assy | |
| 6 | 3779326M1 | 2 | Circlip | |
| 7 | 3779330M1 | 2 | Crownwheel | |
| 8 | 3779324M1 | 20 | Disc | |
| 9 | 3779323M1 | 20 | Disc | |
| 10 | 3779322M1 | 2 | Circlip | |
| 11 | 3779360M1 | 2 | Circlip | |
| 12 | 3779328M1 | 12 | Washer | |
| 13 | 3779327M1 | 2 | Washer | |
| 14 | 3779329M1 | 2 | Piston | |
| 15 | 3779325M1 | 2 | Gasket | |
| 16 | 3779319M1 | 2 | O Ring | |
| 17 | 3779220M1 | 3 | Oil Seal | |
| 18 | 3779340M1 | 1 | Shaft | |
| 19 | 3779337M1 | 1 | Bearing Assy | |
| 20 | 3779212M1 | 1 | Bearing Assy | |
| 21 | 3779341M1 | 1 | Pinion | Number of teeth/spines 76 |
| 22 | 3779321M1 | 1 | Circlip | |
| 23 | 3779213M1 | 1 | Bearing Assy | |

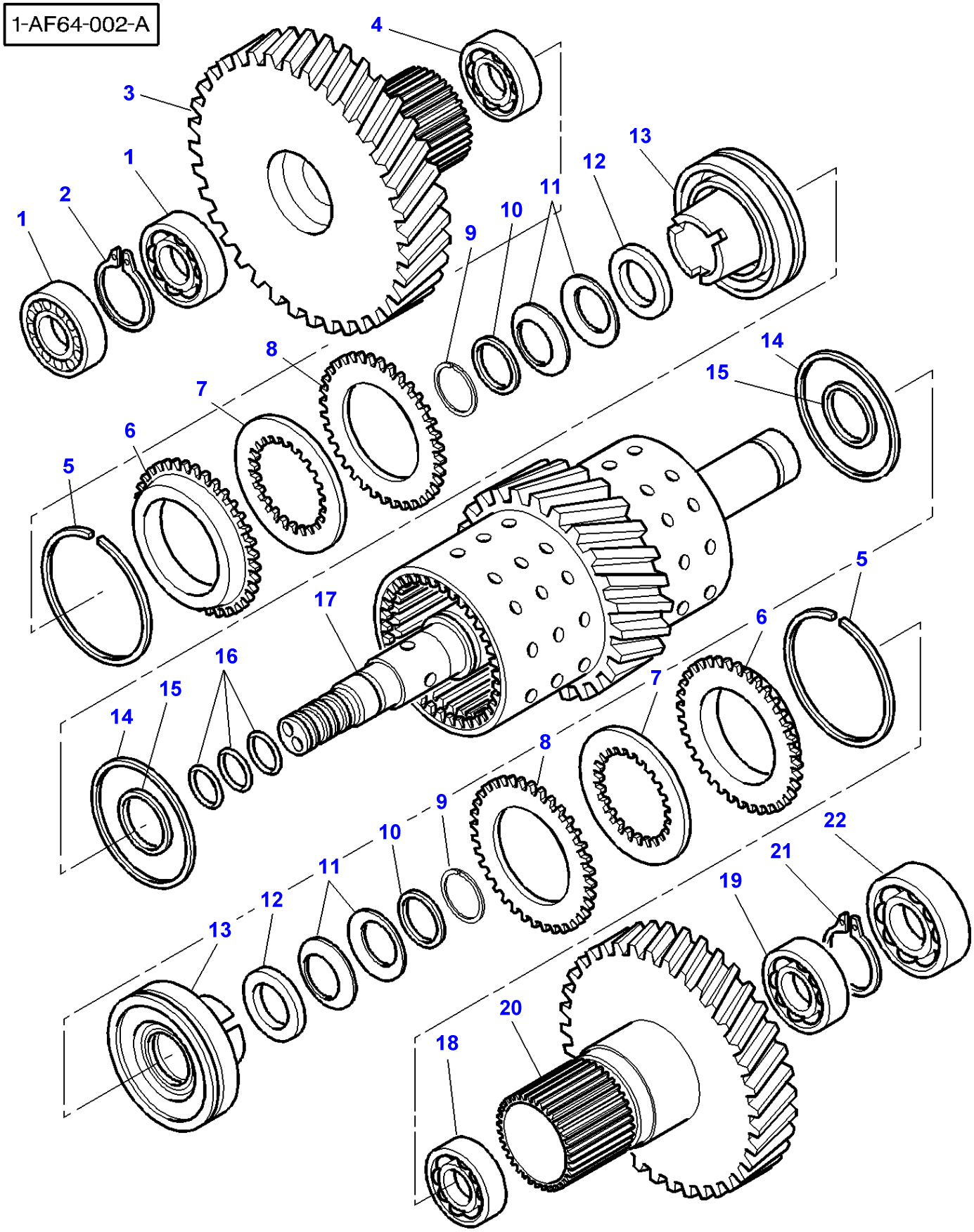
1-AF64-002-A
4
3
1
2
1
13
12
11
10
9
8
7
6
5
14
15
5
6
7
8
9
10
11
12
13
14
15
16
17
22
21
19
20
18

| Item | Part Number | Qty | Description | Comments |
|---|---|---|---|---|
| | 3779344M91 | 1 | Kit, Sprocket | |
| 1 | 3779336M1 | 2 | Bearing Assy | |
| 2 | 3779231M1 | 1 | Circlip | |
| 3 | 3779347M1 | 1 | Pinion | Number of teeth/spines 80 |
| 4 | 3779346M1 | 1 | Bearing Assy | |
| 5 | 3779326M1 | 2 | Circlip | |
| 6 | 3779330M1 | 2 | Crownwheel | |
| 7 | 3779324M1 | 20 | Disc | |
| 8 | 3779323M1 | 20 | Disc | |
| 9 | 3779322M1 | 2 | Circlip | |
| 10 | 3779360M1 | 2 | Circlip | |
| 11 | 3779328M1 | 12 | Washer | |
| 12 | 3779327M1 | 2 | Washer | |
| 13 | 3779329M1 | 2 | Piston | |
| 14 | 3779325M1 | 2 | Gasket | |
| 15 | 3779319M1 | 2 | O Ring | |
| 16 | 3779220M1 | 3 | Oil Seal | |
| 17 | 3779332M1 | 1 | Shaft | |
| 18 | 3779337M1 | 1 | Bearing Assy | |
| 19 | 3779212M1 | 1 | Bearing Assy | |
| 20 | 3779345M1 | 1 | Pinion | Number of teeth/spines 76 |
| 21 | 3779321M1 | 1 | Circlip | |
| 22 | 3779331M1 | 1 | Bearing Assy | |

1-AF65-002-A

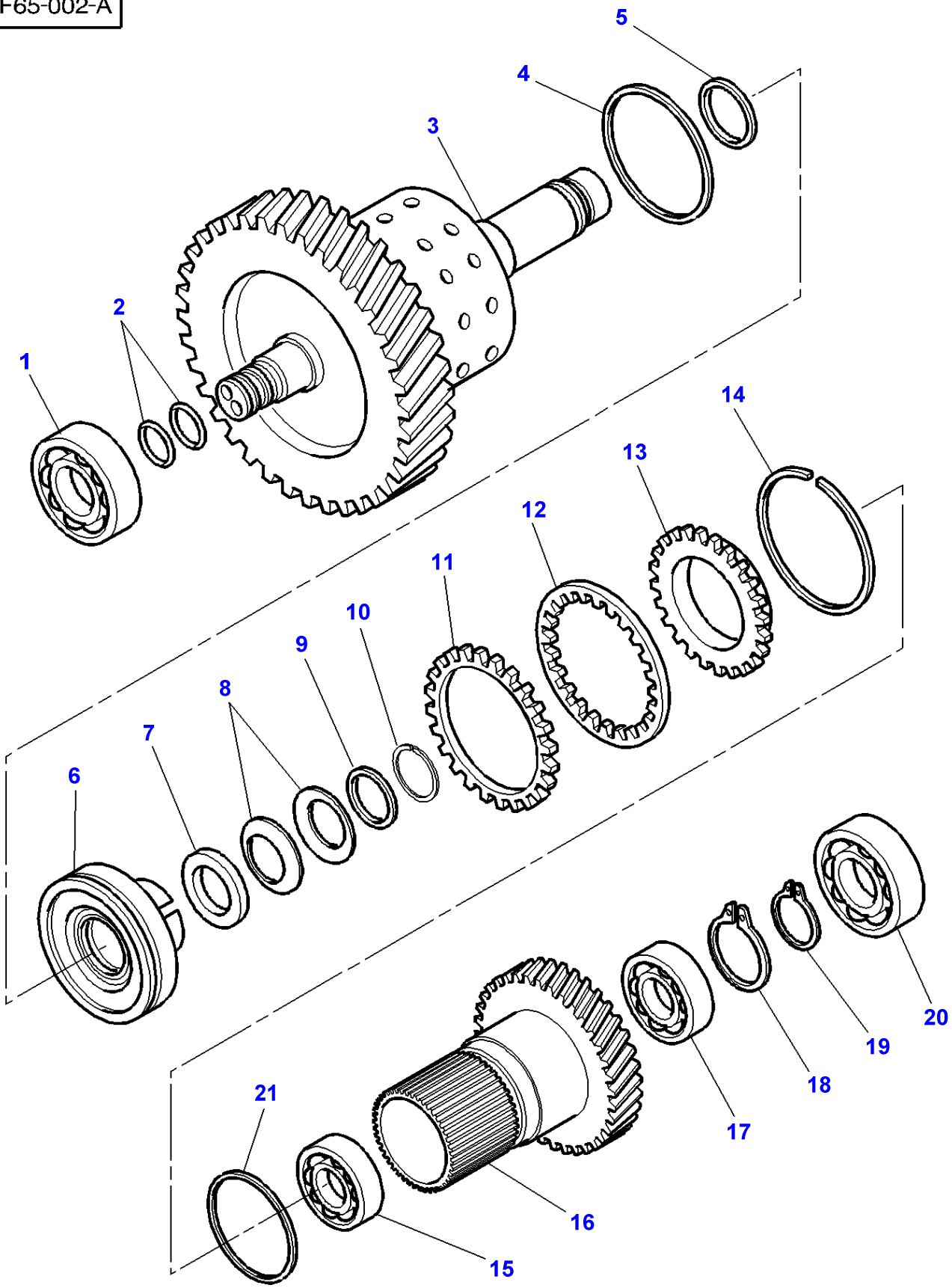

| Item | Part Number | Qty | Description | Comments |
|---|---|---|---|---|
| | 3779348M91 | 1 | Kit, Sprocket | |
| 1 | 3779331M1 | 1 | Bearing Assy | |
| 2 | 3779220M1 | 2 | Oil Seal | |
| 3 | 3779349M1 | 1 | Shaft | |
| 4 | 3779325M1 | 1 | Gasket | |
| 5 | 3779319M1 | 1 | O Ring | |
| 6 | 3779329M1 | 1 | Piston | |
| 7 | 3779327M1 | 1 | Washer | |
| 8 | 3779328M1 | 6 | Washer | |
| 9 | 3779360M1 | 1 | Circlip | |
| 10 | 3779322M1 | 1 | Circlip | |
| 11 | 3779323M1 | 10 | Disc | |
| 12 | 3779324M1 | 10 | Disc | |
| 13 | 3779330M1 | 1 | Crownwheel | |
| 14 | 3779326M1 | 1 | Circlip | |
| 15 | 3779350M1 | 1 | Bearing Assy | |
| 16 | 3779351M1 | 1 | Pinion | Number of teeth/spines 44 |
| 17 | 3779352M1 | 1 | Bearing Assy | |
| 18 | 3779321M1 | 1 | Circlip | |
| 19 | 3779231M1 | 1 | Circlip | |
| 20 | 3779336M1 | 1 | Bearing Assy | |
| 21 | 3779320M1 | 1 | O Ring | |

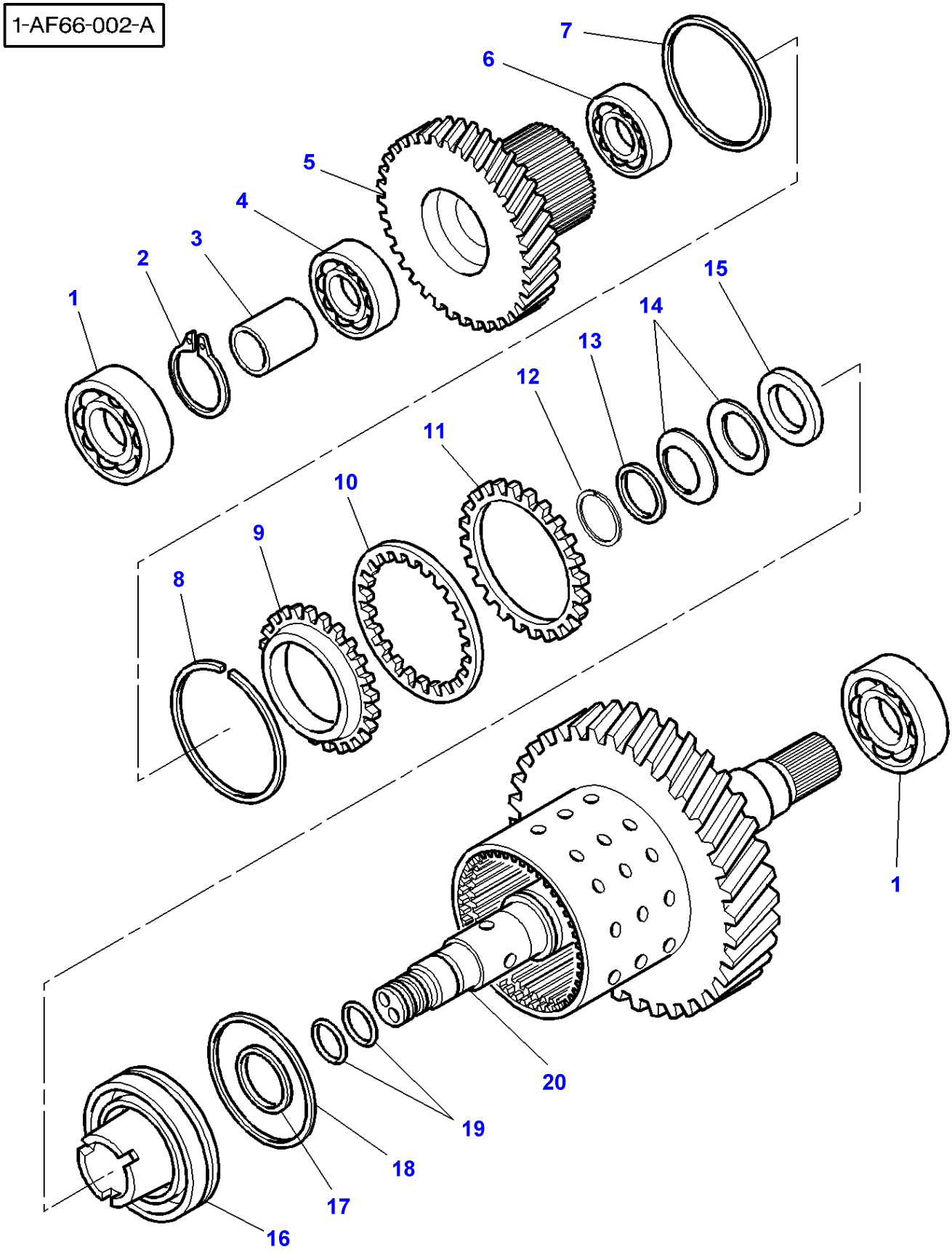
1-AF66-002-A
7
6
5
4
3
2
1
15
14
13
12
11
10
9
8
1
20
19
18
17
16

| Item | Part Number | Qty | Description |
|---|---|---|---|
| | 3779353M91 | 1 | Kit, Sprocket |
| 1 | 3779331M1 | 2 | Bearing Assy |
| 2 | 3779321M1 | 1 | Circlip |
| 3 | 3779361M1 | 1 | Spacer |
| 4 | 3779212M1 | 1 | Bearing Assy |
| 5 | 3779355M1 | 1 | Pinion |
| 6 | 3779350M1 | 1 | Bearing Assy |
| 7 | 3779320M1 | 1 | O Ring |
| 8 | 3779326M1 | 1 | Circlip |
| 9 | 3779330M1 | 1 | Crownwheel |
| 10 | 3779324M1 | 10 | Disc |
| 11 | 3779323M1 | 10 | Disc |
| 12 | 3779322M1 | 1 | Circlip |
| 13 | 3779360M1 | 1 | Circlip |
| 14 | 3779328M1 | 6 | Washer |
| 15 | 3779327M1 | 1 | Washer |
| 16 | 3779329M1 | 1 | Piston |
| 17 | 3779319M1 | 1 | O Ring |
| 18 | 3779325M1 | 1 | Gasket |
| 19 | 3779220M1 | 2 | Oil Seal |
| 20 | 3779354M1 | 1 | Shaft |

1-AF67-002-A

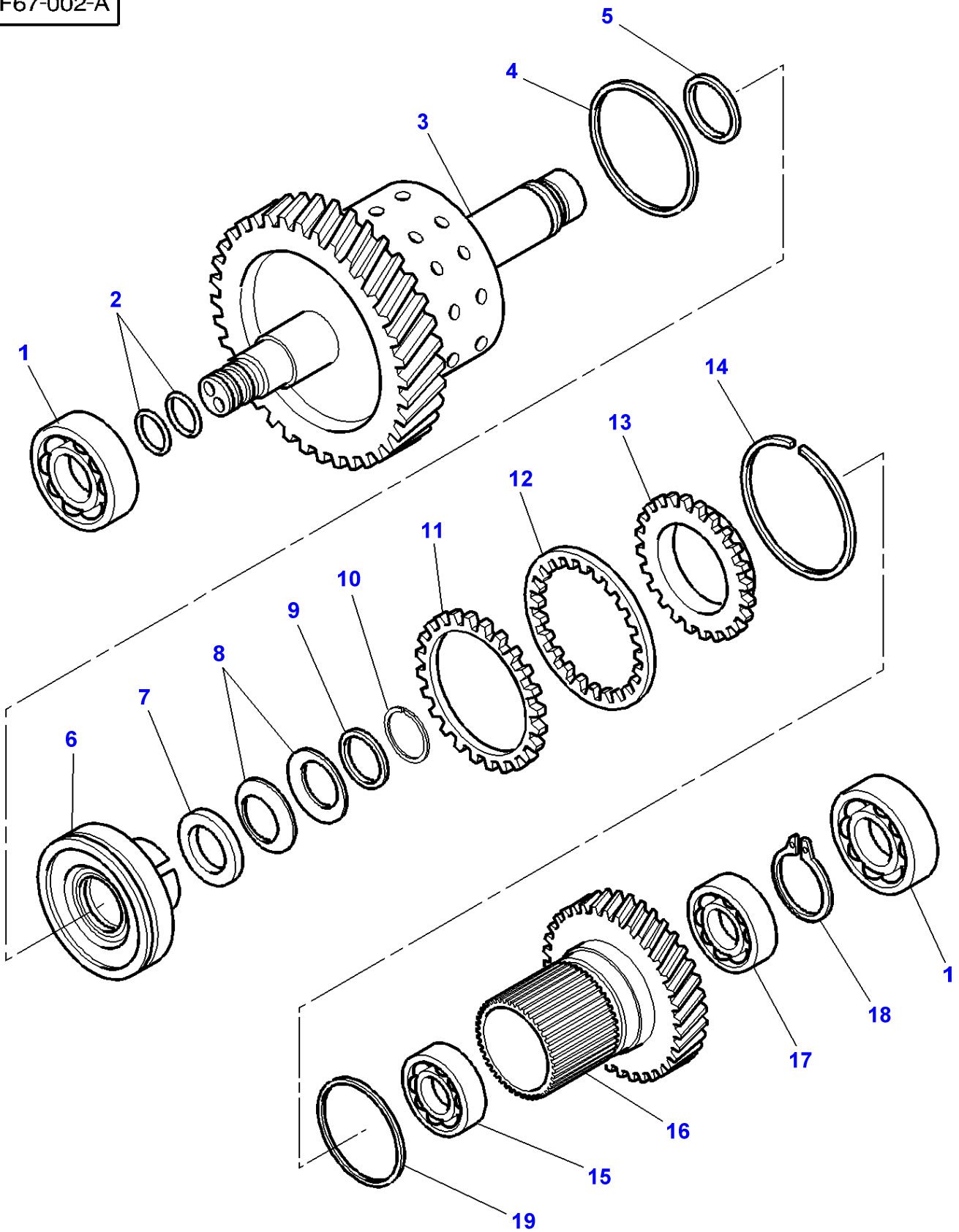

| Item | Part Number | Qty | Description | Comments |
|---|---|---|---|---|
| | 3779356M91 | 1 | Kit, Pinion | |
| 1 | 3779331M1 | 2 | Bearing Assy | |
| 2 | 3779220M1 | 2 | Oil Seal | |
| 3 | 3779357M1 | 1 | Shaft | |
| 4 | 3779325M1 | 1 | Gasket | |
| 5 | 3779319M1 | 1 | O Ring | |
| 6 | 3779329M1 | 1 | Piston | |
| 7 | 3779327M1 | 1 | Washer | |
| 8 | 3779328M1 | 6 | Washer | |
| 9 | 3779360M1 | 1 | Circlip | |
| 10 | 3779322M1 | 1 | Circlip | |
| 11 | 3779323M1 | 10 | Disc | |
| 12 | 3779324M1 | 10 | Disc | |
| 13 | 3779330M1 | 1 | Crownwheel | |
| 14 | 3779326M1 | 1 | Circlip | |
| 15 | 3779350M1 | 1 | Bearing Assy | |
| 16 | 3779358M1 | 1 | Pinion | Number of teeth/spines 47 |
| 17 | 3779352M1 | 1 | Bearing Assy | |
| 18 | 3779321M1 | 1 | Circlip | |
| 19 | 3779320M1 | 1 | O Ring | |

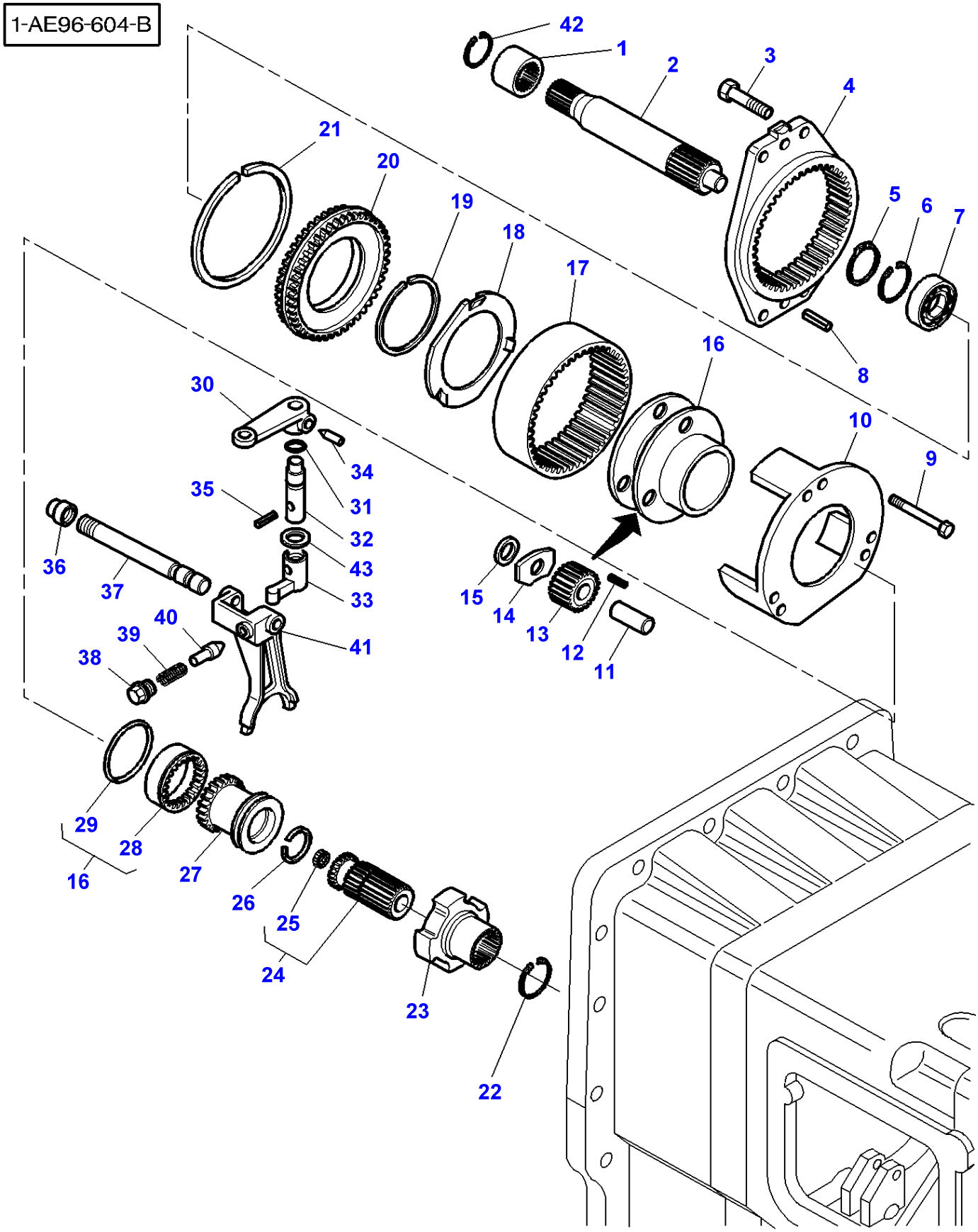
1-AE96-604-B
42
1
2
3
4
21
20
19
18
17
5
6
7
16
8
30
10
9
34
35
31
32
36
43
37
33
15
14
13
12
11
40
39
41
38
29
28
16
27
26
25
24
23
22

| Item | Part Number | Qty | Description | Comments |
|---|---|---|---|---|
| 1 | 3716442M1 | 1 | Sleeve | |
| 2 | 3716838M2 | 1 | Shaft | |
| 3 | 3009507X1 | 4 | Hex. Sock. Screw | M12X35MM |
| 4 | 3716843M1 | 1 | Support | |
| 5 | 339605X1 | 1 | Circlip | |
| 6 | 339606X1 | 1 | Circlip | |
| 7 | 3010128X1 | 1 | Bearing Assy | |
| 8 | 3385839M2 | 2 | Pin | |
| 9 | 3015134X1 | 6 | Screw | M6X65MM |
| 10 | 3716862M3 | 1 | Plate | |
| 11 | 1866538M2 | 3 | Shaft | |
| 12 | 1866553M2 | 96 | Roller | |
| 13 | 1866552M1 | 3 | Pinion | |
| 14 | 1866543M1 | 3 | Washer | |
| 15 | 1866542M1 | 6 | Thrust Washer | |
| 16 | 1866558M93 | 1 | Carrier | |
| 17 | 3716821M2 | 1 | Annular Gear | |
| 18 | 1866545M2 | 2 | Disc | |
| 19 | 377424X1 | 1 | Ring | |
| 20 | 3716837M1 | 1 | Support | |
| 21 | 3010750X1 | 1 | Segment | Diameter 180MM |
| 22 | 1441247X1 | 1 | Ring | |
| 23 | 3791821M1 | 1 | Sleeve | [A] |
| 24 | 3716840M11 | 1 | Shaft | |
| 25 | 3010741X1 | 1 | Insert | (24) |
| 26 | 3010640X1 | 1 | Ring | |
| 27 | 3716845M1 | 1 | Coupling | |
| 28 | 1866544M2 | 1 | Spacer | (16) |
| 29 | 1866539M1 | 1 | Ring | (16) |
| 30 | 3386195M2 | 1 | Rod Link | |
| 31 | 851258M1 | 1 | O Ring | |
| 32 | 3791633M1 | 1 | Clevis Pin | |
| 33 | 3716449M1 | 1 | Selector | |
| 34 | 3382979M1 | 1 | Screw Special | |
| 35 | 3001293X1 | 1 | Pin | |
| 36 | 3716447M2 | 1 | Nut | |
| 37 | 3716847M2 | 1 | Stem | |
| 38 | 3382343M1 | 1 | Plug | |
| 39 | 191221M1 | 1 | Spring | |
| 40 | 180418M2 | 1 | Plunger | |
| 41 | 3716846M3 | 1 | Fork | |
| 42 | 392376X1 | 1 | Circlip | |
| 43 | 3792320M1 | | Chock | Thickness 0,5 MM |
| | 3792321M1 | | Chock | Thickness 1 MM |
| | 3792322M1 | | Chock | Thickness 3 MM |
| | 3792361M1 | | Chock | Thickness 5 MM |

**FOOTNOTE [A]** WITH PARKING BRAKE

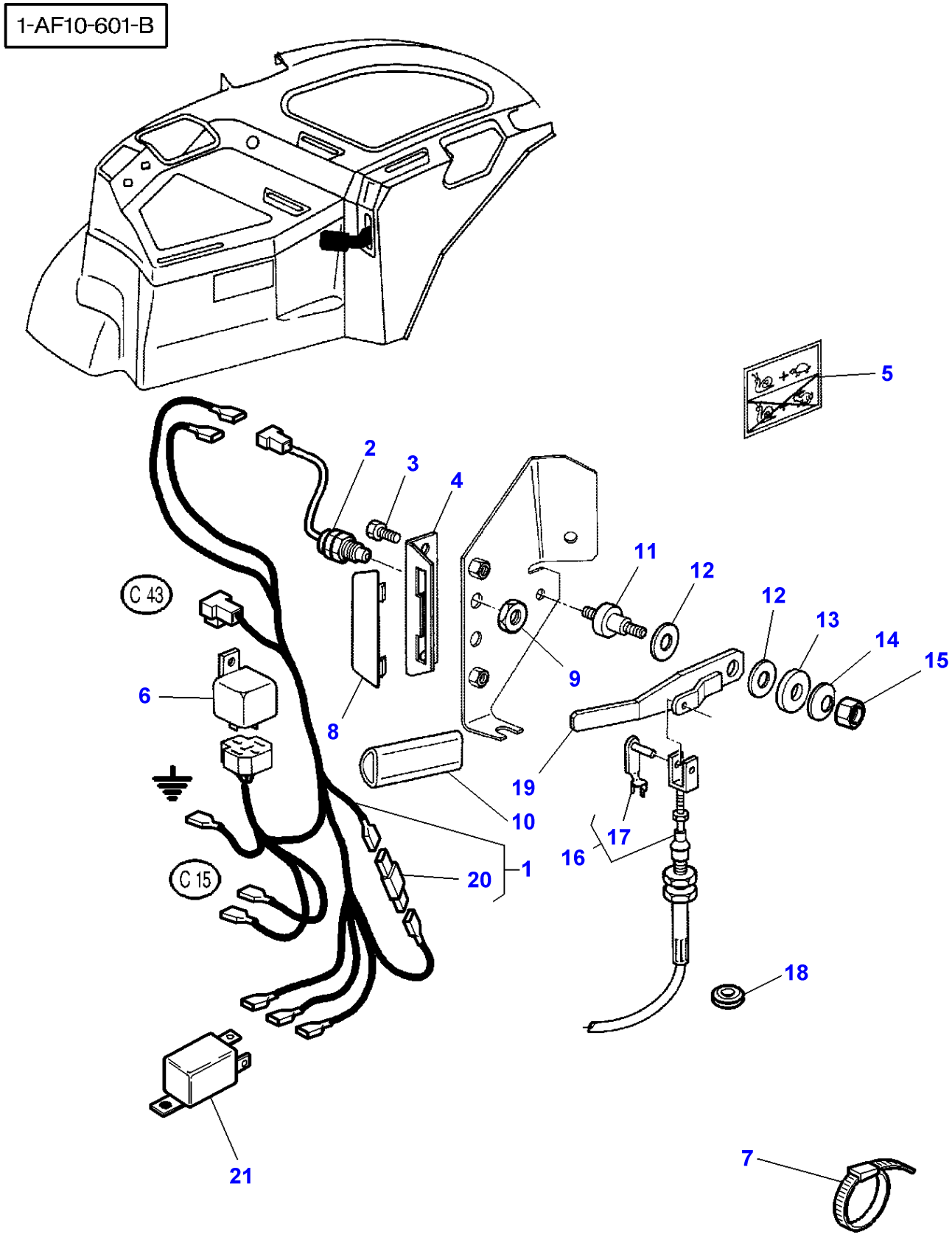
1-AF10-601-B
5
2
3
4
11
12
12
13
14
15
C 43
6
9
8
19
10
17
16
C 15
20
1
18
21
7

| Item | Part Number | Qty | Description | Comments |
|---|---|---|---|---|
| 1 | 3777521M1 | 1 | Harness | See Page - Reference Number 080-0040/1 |
| 2 | **3780581M1** | 1 | Switch,Indirect | Replace and repair. Old interchangeable with new 3386171M1 |
| 3 | 339228X1 | 2 | Screw Metric | M8X12 |
| 4 | 3712275M1 | 1 | Grille | |
| 5 | 3615381M1 | 1 | Decal | |
| 6 | **3618239M1** | 1 | Relay | |
| 7 | 3619622M1 | 5 | Cable Tie | Replace and repair. Old not interchangeable with new 1862425M1 |
| 8 | 3712984M1 | 1 | Plate | [A] |
| 9 | 3386198M1 | 1 | Nut Special | |
| 10 | 3712976M2 | 1 | Handle | [D] |
| | 3777016M1 | | Knob | [E] |
| 11 | 3712277M1 | 1 | Clevis Pin | |
| 12 | 3386166M1 | 2 | Washer | |
| 13 | 1442174X1 | 1 | Washer | |
| 14 | 3386192M1 | 1 | Washer | |
| 15 | 1441461X1 | 1 | Locknut | |
| 16 | 3712989M2 | 1 | Cable | |
| 17 | 3600190M1 | 1 | Clevis Pin | (16)<br>Length 28MM |
| | 3600191M1 | 1 | Clevis Pin | (16)<br>Length 40MM |
| 18 | 3713587M1 | 1 | Plug | [A] |
| 19 | 3712281M3 | 1 | Lever | |
| 20 | | | Not Used | |
| 21 | **3615652M1** | 1 | Relay | 12V - 25A |

**FOOTNOTE [A]** WITHOUT CREEPER GEAR
**FOOTNOTE [B]** WITH DYNASHIFT
**FOOTNOTE [C]** WITH FULL POWERSHIFT
**FOOTNOTE [D]** BLACK
**FOOTNOTE [E]** YELLOW

1-AE99-603-B

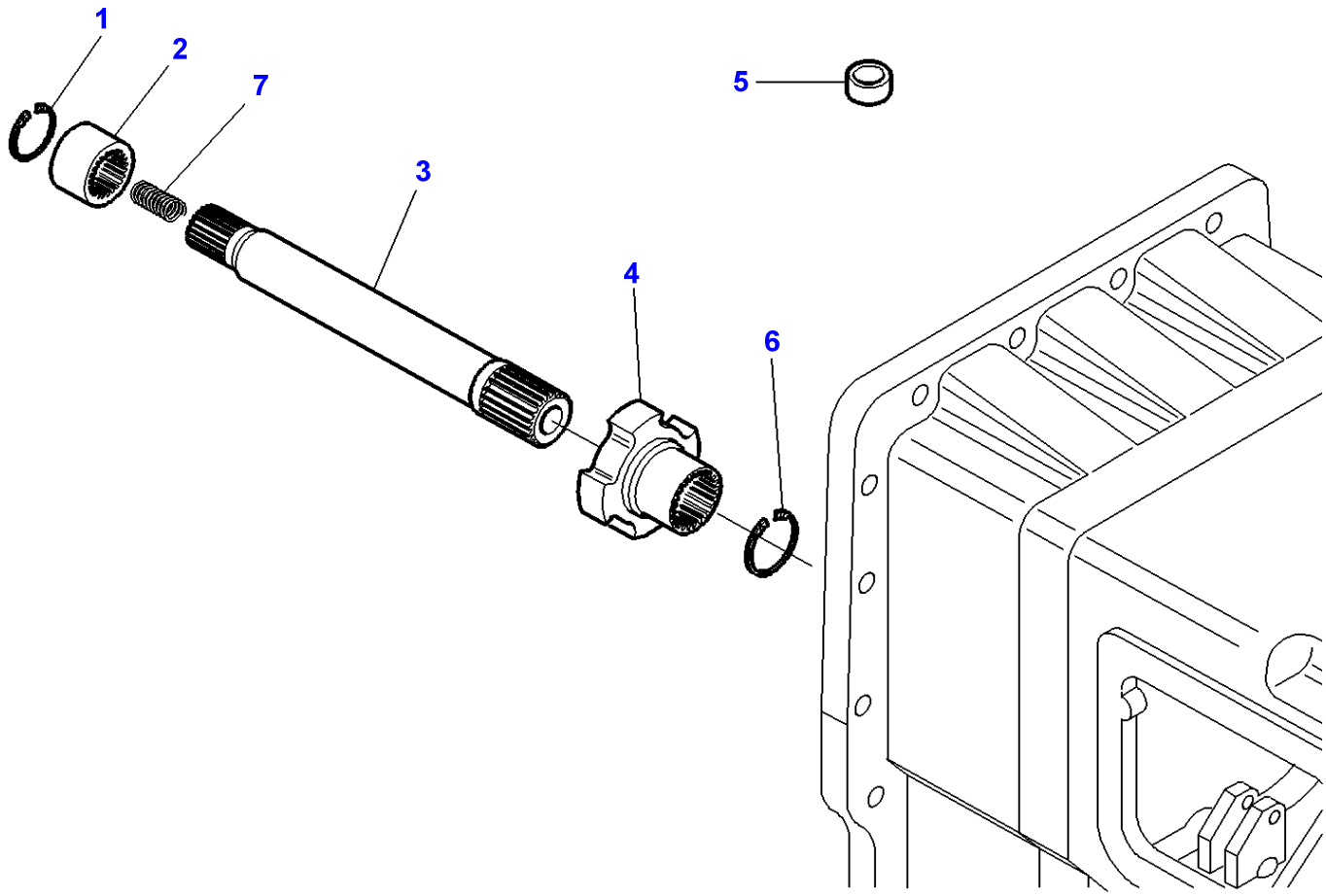

| Item | Part Number | Qty | Description | Comments |
|---|---|---|---|---|
| 1 | 3716442M1 | 1 | Sleeve | |
| 2 | 392376X1 | 1 | Circlip | |
| 3 | 3716459M3 | 1 | Shaft | |
| 4 | 3791821M1 | 1 | Sleeve | [A] |
| 5 | 3006020X1 | 1 | Plug | |
| 6 | 1441247X1 | 1 | Ring | |
| 7 | 3715534M1 | 1 | Spring | |

**FOOTNOTE [A]** WITH PARKING BRAKE

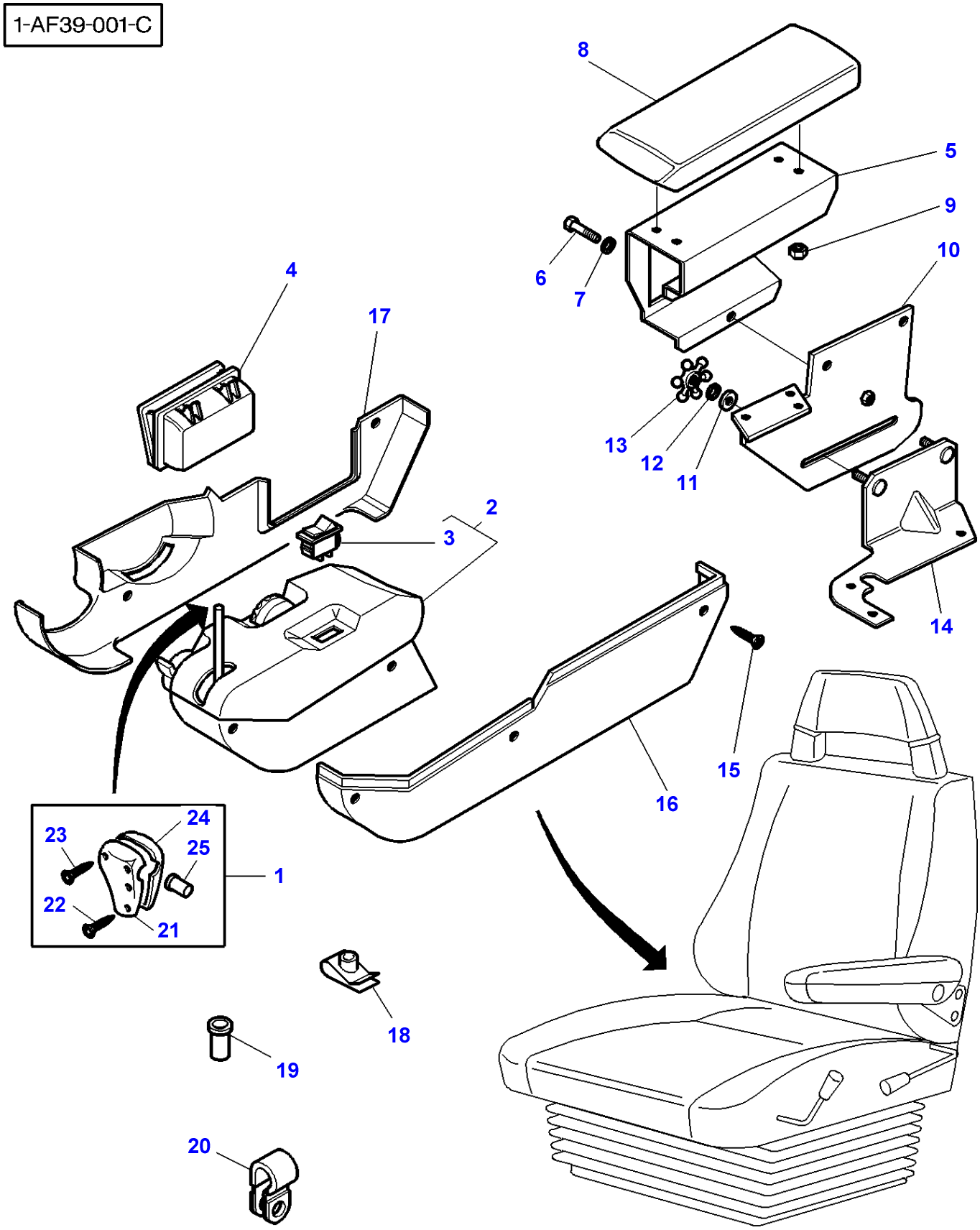
1-AF39-001-C
8
5
9
10
6
7
4
17
13
12
11
2
3
14
15
16
24
23
25
1
22
21
18
19
20

| Item | Part Number | Qty | Description | Comments |
|---|---|---|---|---|
| 1 | 3779557M95 | 1 | Handle | |
| 2 | 3778524M92 | 1 | Plate Control | Four Wheel Drive |
| 3 | **3780077M2** | 1 | Switch,Indirect | (2)<br>Four Wheel Drive |
| 4 | 3712912M1 | 1 | Ashtray | |
| 5 | 3778674M2 | 1 | Support | |
| 6 | 339228X1 | 3 | Screw Metric | |
| 7 | 390972X1 | 3 | Washer Metric | |
| 8 | 3778521M1 | 1 | Armrest | |
| 9 | 1441500X1 | 4 | Locknut | |
| 10 | 3778518M2 | 1 | Plate | |
| 11 | 3778519M1 | 2 | Washer | |
| 12 | 1440264X1 | 2 | Washer Metric | |
| 13 | 3778520M1 | 2 | Button | |
| 14 | 3778517M1 | 1 | Angle | |
| 15 | 3010578X1 | 7 | Screw | M5X10 |
| 16 | 3778528M2 | 1 | Flange | Left Hand |
| 17 | 3778529M1 | 1 | Flange | Right Hand |
| 18 | 3715142M1 | 1 | Nut | M5 |
| 19 | 3778672M1 | 3 | Nut | M5 |
| 20 | 3779547M1 | 1 | Clamp | |
| 21 | 3779000M5 | 1 | Shell | (1) |
| 22 | 3010559X1 | 4 | Screw | (1)<br>M4X12 |
| 23 | 3782976M1 | 1 | Self Tap Screws | (1)<br>N6-16 |
| 24 | 3779001M5 | 1 | Shell | (1) |
| 25 | | 1 | Control Knob | (1)<br>Not serviced,order REF 1 |

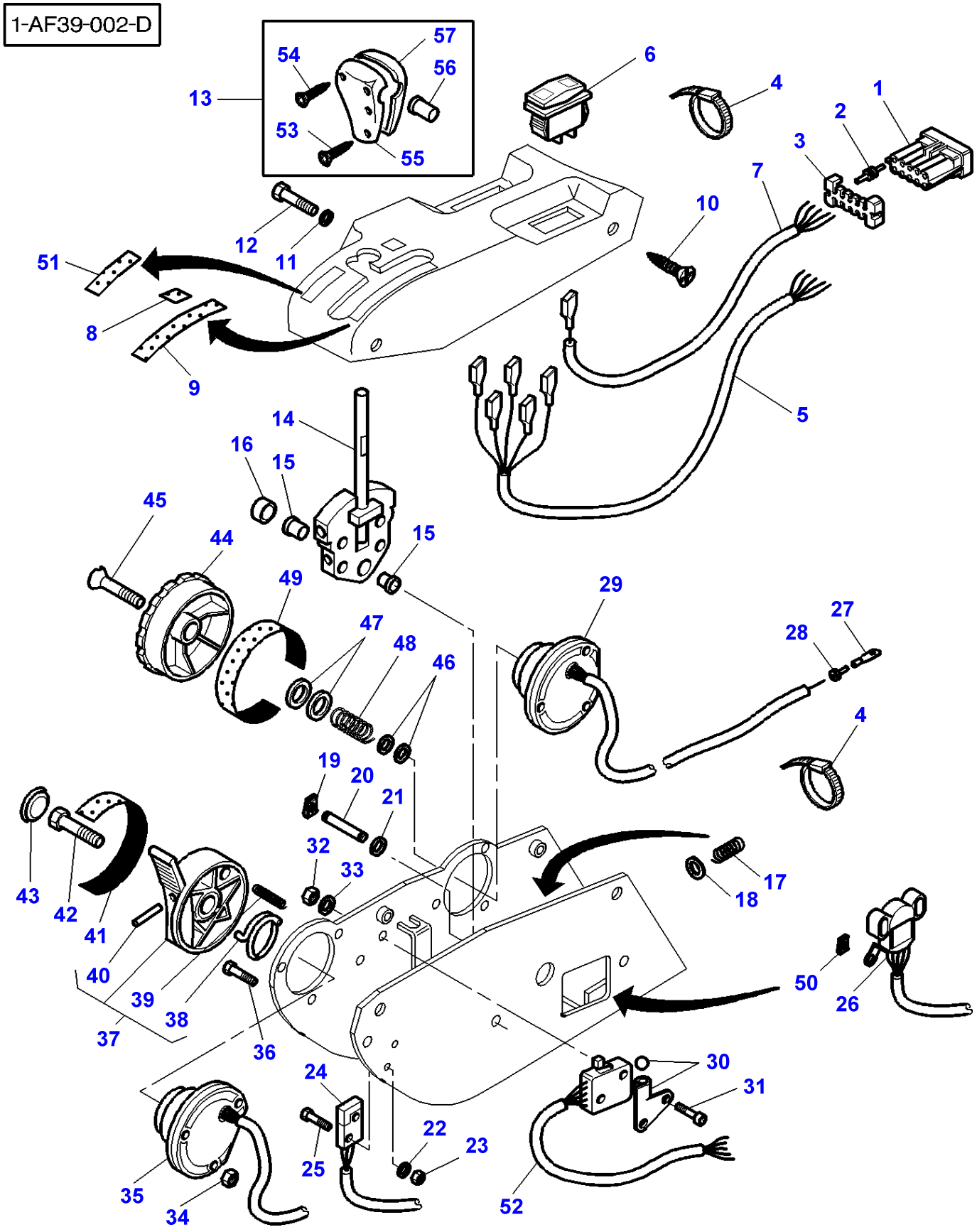
1-AF39-002-D
57
54
56
13
6
4
1
2
53
55
3
7
10
12
11
51
8
9
5
14
16
15
45
44
15
49
29
27
47
48
46
28
4
19
20
21
32
33
43
42
41
40
39
38
37
36
17
18
50
26
30
31
24
22
23
25
35
34
52

| Item | Part Number | Qty | Description | Comments |
|---|---|---|---|---|
| 1 | 3902942M1 | 1 | Connectors | GREY |
| | 3902943M1 | 1 | Connectors | BLACK |
| 2 | 3902940M1 | 2 | Plastic Plug | |
| 3 | 3902941M1 | 2 | Connectors | |
| 4 | 3902829M1 | 12 | Tie | |
| 5 | 3902848M1 | 1 | Harness | Four Wheel Drive |
| 6 | **3780077M2** | 1 | Switch,Indirect | Four Wheel Drive |
| 7 | 3902849M1 | 1 | Harness | |
| 8 | 3902846M1 | 1 | Decal | |
| 9 | 3902847M1 | 1 | Decal | |
| 10 | 3004566X1 | 2 | Screw | M6x16 |
| 11 | 1441206X1 | 3 | Lock Washer | M6 |
| 12 | 339560X1 | 3 | Hex. Sock. Screw | M6x16 |
| 13 | 3779557M95 | 1 | Handle | |
| 14 | 3902861M1 | 1 | Lever | |
| 15 | 3902838M1 | 2 | Bearing | |
| 16 | 3902850M1 | 1 | Spacer | |
| 17 | 3902859M1 | 1 | Spring | |
| 18 | 3902863M1 | 1 | Washer | |
| 19 | 3902944M1 | 2 | Clip | Diameter 6 MM |
| 20 | 3902945M2 | 1 | Pin | |
| 21 | 3902947M1 | 1 | Roller | |
| 22 | 3902866M1 | 2 | Washer | M3 |
| 23 | 3010599X1 | 2 | Nut Metric | M3 |
| 24 | **3902860M1** | 1 | Switch,Indirect | |
| 25 | 1442829X1 | 2 | Screw | M3x16 |
| 26 | **3902946M91** | 1 | Potentiometer | |
| 27 | 3902843M1 | 4 | Connectors | |
| 28 | 3902842M1 | 4 | Grommet | RED |
| 29 | 3902845M91 | 1 | Potentiometer | |
| 30 | 3902862M1 | 1 | Plate | |
| 31 | 1442829X1 | 2 | Screw | M3x16 |
| 32 | 3010599X1 | 2 | Nut Metric | M3 |
| 33 | 3902866M1 | 2 | Washer | M3 |
| 34 | 3019139X1 | 6 | Nut | M4 |
| 35 | 3902844M91 | 1 | Potentiometer | |
| 36 | 3009531X1 | 6 | Screw Metric | M4x12 |
| 37 | 3902835M91 | 1 | Lever | |
| 38 | 3902950M1 | 1 | Spring | (37) |
| 39 | 3902948M1 | 1 | Spring | (37) |
| 40 | 3902949M1 | 1 | Pin | (37) |
| 41 | 3902825M1 | 1 | Decal | |
| 42 | 339096X1 | 1 | Bolt Metric | M6x35 |
| 43 | 3902831M1 | 1 | Tap | |
| 44 | 3902836M1 | 1 | Button | |
| 45 | 3009674X1 | 1 | Screw | M6x35 |
| 46 | 3902833M1 | 2 | Seal | |
| 47 | 3902830M1 | 2 | Washer | |
| 48 | 3902832M1 | 1 | Spring | |
| 49 | 3902826M1 | 1 | Decal | |
| 50 | 3902955M1 | 2 | Clip | Diameter 5 MM |
| 51 | 3903016M1 | 1 | Decal | |
| 52 | 3903199M91 | 1 | Harness | |
| 53 | 3010559X1 | 4 | Screw | (13) M4X12 |
| 54 | 3782976M1 | 1 | Self Tap Screws | (13) N 6-16 |
| 55 | 3779000M5 | 1 | Shell | (13) |
| 56 | | 1 | Control Knob | (13) Not serviced,order REF 13 |
| 57 | 3779001M5 | 1 | Shell | (13) |

1-AW26-002-A

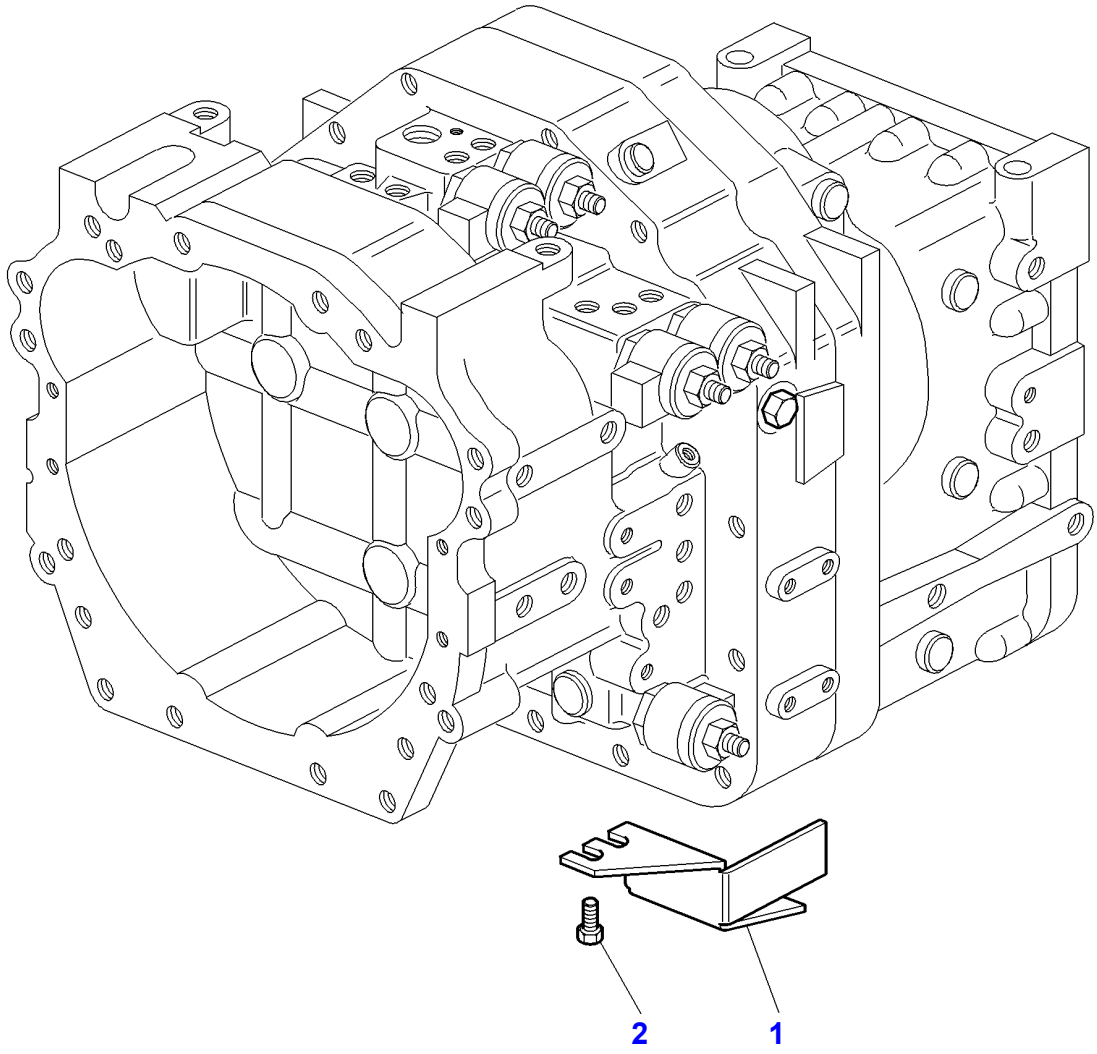

| Item | Part Number | Qty | Description | Comments |
|---|---|---|---|---|
| 1 | 3791246M1 | 1 | Cowl | Right Hand |
| | 3791247M1 | 1 | Cowl | Left Hand |
| 2 | 339228X1 | 4 | Screw Metric | M8X12 |

| Page Title | Page Number |
|---|---|
| Rear Axle - Intermediary Housing | 030-0005 |
| Handbrake - Lower Control | 030-0010 |
| Brakes - Handbrake - Up to Serial or Engine Number - H091014 | 030-0015 |
| Brakes - Handbrake - From Serial or Engine Number - H091015 | 030-0020 |
| Parking Brake - With Powershift | 030-0025 |
| Rear Axle - Centre Housing | 030-0030 |
| Short Rear Axle Housings - Outer Final Drive Gear - With Dual Reducer | 030-0035 |
| Rear Axle - Differential | 030-0040 |
| Rear Axle Differential Lock Mecchanism - Multidiscs | 030-0045 |

1-AG63-002-C

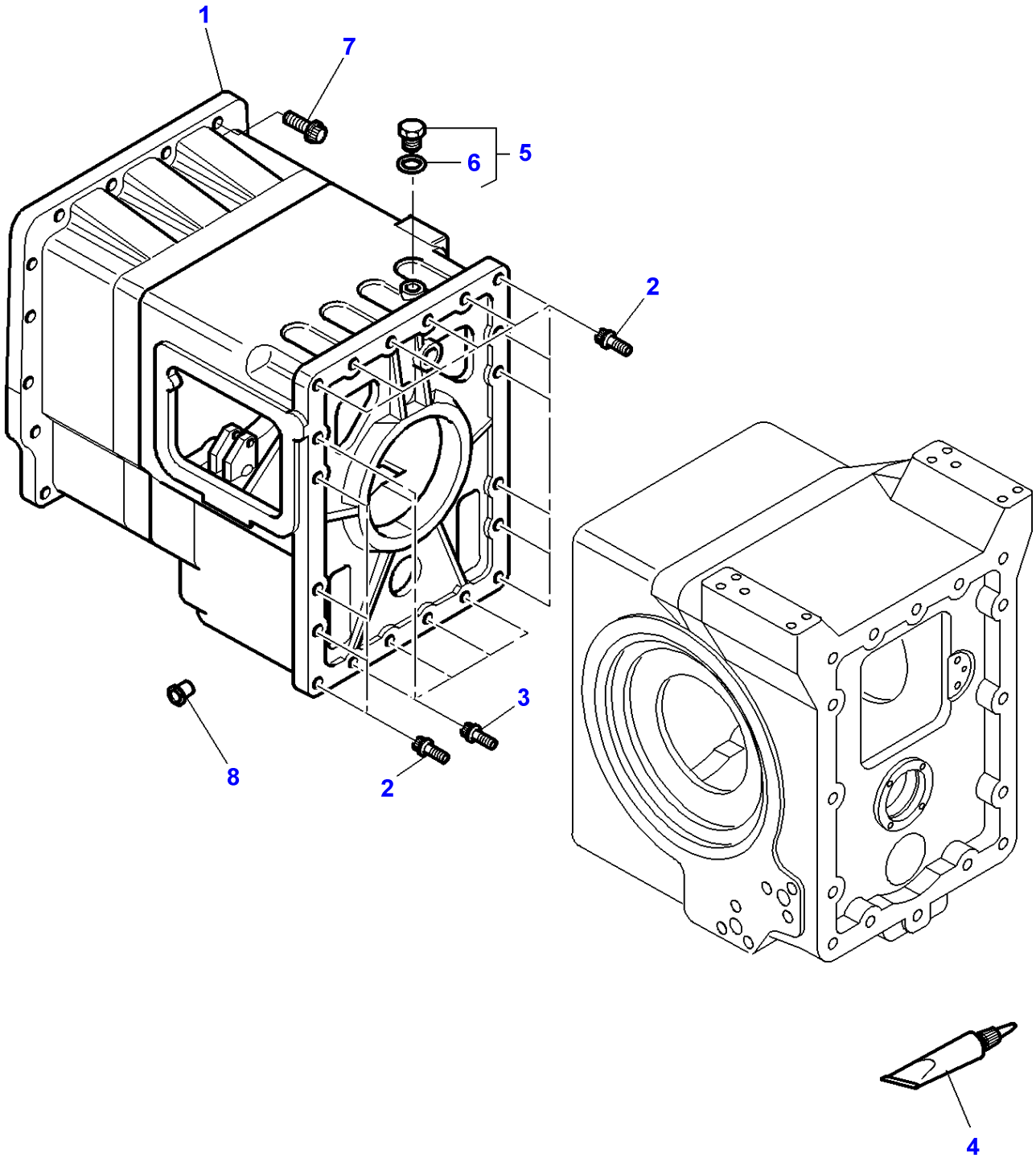

| Item | Part Number | Qty | Description | Comments |
|---|---|---|---|---|
| 1 | 3716412M4 | 1 | Housing | |
| 2 | 3009805X1 | 15 | Screw Metric | M16X60 |
| 3 | 3009806X1 | 5 | Plough Bolt | M16X70 |
| 4 | 3900613M2 | X | Loctite | |
| 5 | 3019649X91 | 1 | Plug | M33 |
| 6 | 3019399X1 | 1 | O Ring | (5) |
| 7 | 3010007X1 | 18 | Screw Metric | M16X60 |
| 8 | 3792315M1 | 2 | Plug | [A] Diameter 20,9MM |
| | 3792314M1 | 4 | Plug | [A] Diameter 15MM |
| | 3583240M1 | 8 | Plug | [A] Diameter 6MM |

**FOOTNOTE [A]** PLASTICS

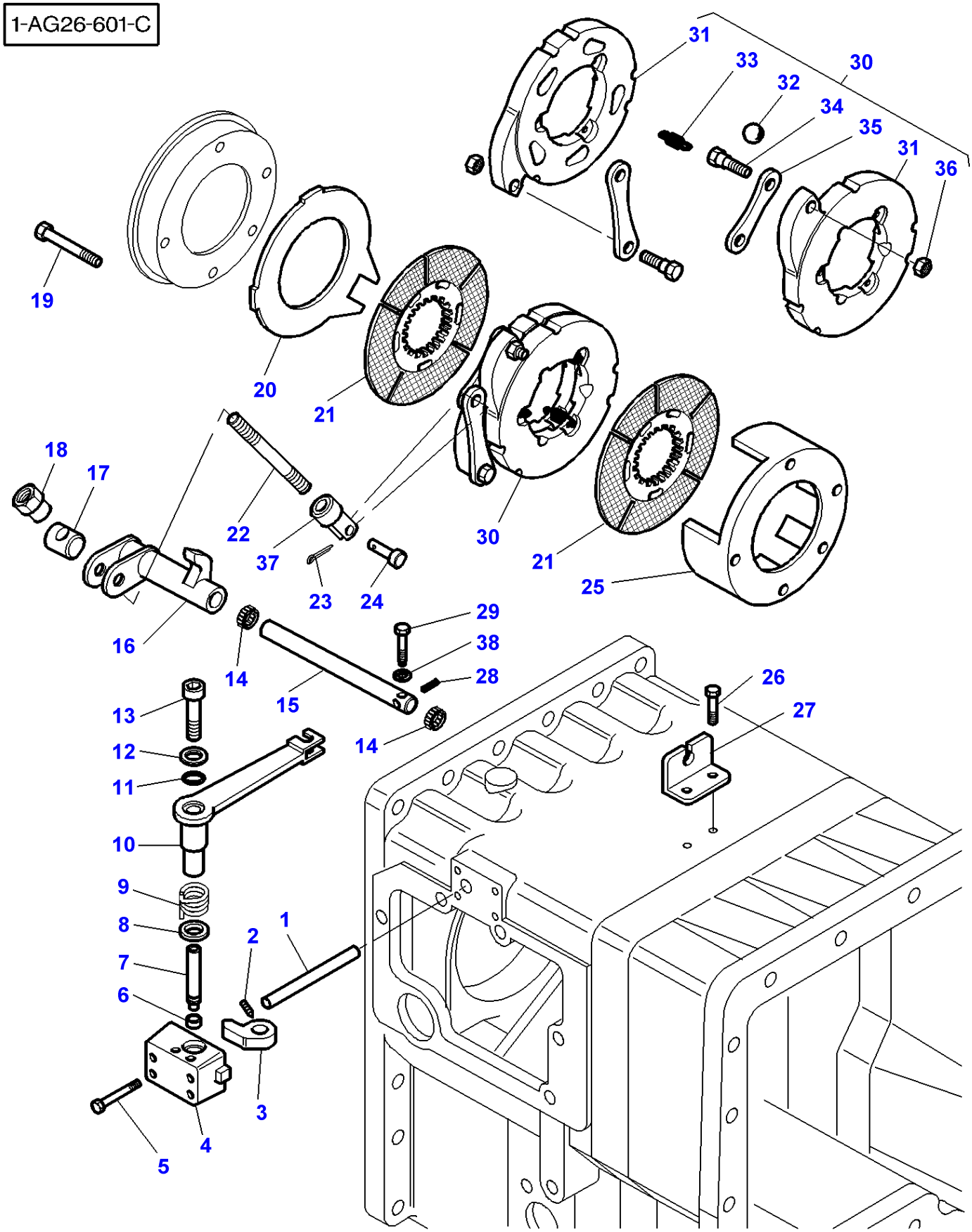
1-AG26-601-C
31
33
30
32
34
35
31
36
19
20
21
18
17
22
37
23
24
30
21
25
29
38
28
16
14
15
14
26
27
13
12
11
10
9
8
7
6
2
1
3
4
5

| Item | Part Number | Qty | Description | Comments |
|---|---|---|---|---|
| 1 | 3716540M1 | 1 | Tappet Rod | |
| 2 | 3009429X1 | 1 | Screw | M6x10 |
| 3 | 3716544M1 | 1 | Poppet | |
| 4 | 3716501M1 | 1 | Case Assy | |
| 5 | 390246X1 | 4 | Bolt | M8X70 |
| 6 | 3716560M1 | 1 | Bush | |
| 7 | 3716503M2 | 1 | Clevis Pin | |
| 8 | 3716310M1 | 1 | Oil Seal | |
| 9 | 3716554M2 | 1 | Spring | |
| 10 | 3716502M2 | 1 | Shifter | |
| 11 | 3010740X1 | 1 | O Ring | |
| 12 | 3716539M1 | 1 | Washer | |
| 13 | 1440350X1 | 1 | Screw Metric | M6X20 |
| 14 | 3716561M1 | 2 | Bush | Diameter 20 MM |
| 15 | 3716542M1 | 1 | Clevis Pin | |
| 16 | 3716477M2 | 1 | Angle Trans. | |
| 17 | 3581305M1 | 1 | Trunnion | |
| 18 | 3791431M1 | 1 | Nut Special | |
| 19 | 3009301X1 | 5 | Screw Metric | M12x80 |
| 20 | 3716932M1 | 4 | Counterplate | [A] |
| 21 | 3716933M1 | 6 | Disc | [A] |
| 22 | 3791669M1 | 1 | Stud | |
| 23 | 354048X1 | 1 | Pin | Diameter 2,4 MM<br>Length 19 MM |
| 24 | 354190X1 | 1 | Clevis Pin | Diameter 7/16" |
| 25 | 3716411M2 | 1 | Case Assy | [A] |
| 26 | 339228X1 | 2 | Screw Metric | M8x12 |
| 27 | 3716543M1 | 1 | Support | |
| 28 | 1440394X1 | 1 | Pin | Diameter 4 MM<br>Length 30 MM |
| 29 | 3791488M2 | 1 | Screw Special | |
| 30 | 3716920M91 | 1 | Brake | |
| 31 | | 2 | Disc | (30)<br>Not serviced,order REF NO 30 |
| 32 | 3310764M1 | 5 | Ball | (30) |
| 33 | 3310765M1 | 3 | Spring | (30) |
| 34 | 3902669M1 | 2 | Screw | (30) |
| 35 | 3902668M1 | 2 | Draglink | (30) |
| 36 | 3902667M1 | 2 | Nut | (30) |
| 37 | 3790494M1 | 1 | Draglink | |
| 38 | 851138M1 | 1 | Seal | From Serial or Engine Number 09/99 |

**FOOTNOTE [A]** 6 PLATE WET BRAKES

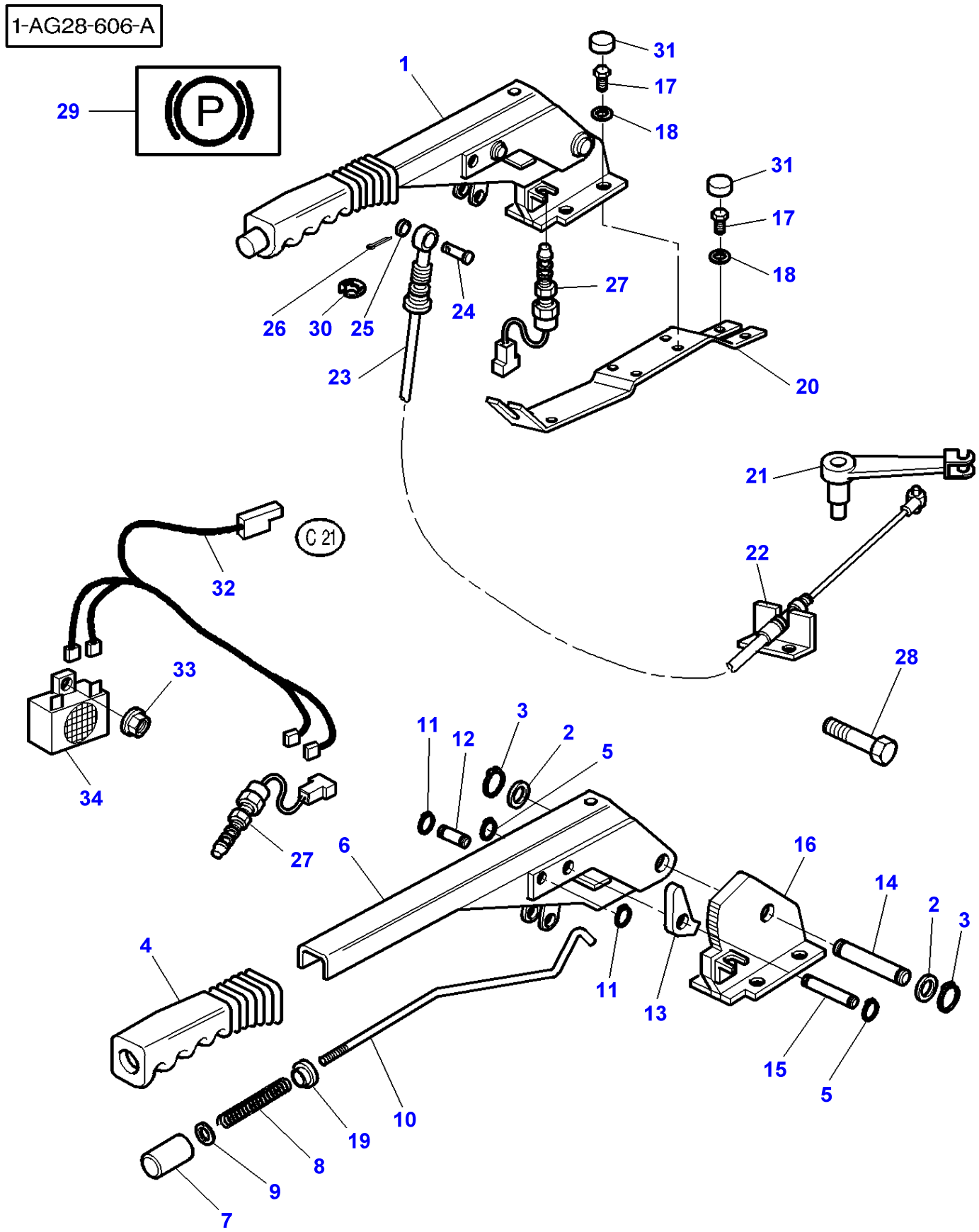
1-AG28-606-A
P
C 21
1
2
3
4
5
6
7
8
9
10
11
12
13
14
15
16
17
18
19
20
21
22
23
24
25
26
27
28
29
30
31
32
33
34

| Item | Part Number | Qty | Description | Comments |
|---|---|---|---|---|
| 1 | 3778478M92 | 1 | Handbrake Assy | |
| 2 | 1693980M1 | 2 | Washer | (1) |
| 3 | 339356X1 | 2 | Circlip | (1) |
| 4 | 1693965M1 | 1 | Handle | (1) |
| 5 | 3000261X1 | 2 | Clip | (1) |
| 6 | | 1 | Lever | (1) Not serviced,order REF NO 1 |
| 7 | 3616904M1 | 1 | Button | (1) |
| 8 | 1693970M1 | 1 | Spring | (1) |
| 9 | 353754X1 | 1 | Washer | (1) |
| 10 | 3715943M1 | 1 | Rod | (1) |
| 11 | 1440988X1 | 2 | Circlip | (1) |
| 12 | 1693974M1 | 1 | Clevis Pin | (1) |
| 13 | 3715942M1 | 1 | Ratchet | (1) |
| 14 | 1693976M1 | 1 | Clevis Pin | (1) |
| 15 | 1693973M1 | 1 | Clevis Pin | (1) |
| 16 | 3779133M92 | 1 | Sector | (1) |
| 17 | 339123X1 | 8 | Hex. Sock. Screw | M8X20 |
| 18 | 390972X1 | 8 | Washer Metric | |
| 19 | 3616905M1 | 1 | Washer | (1) |
| 20 | 3778452M1 | 1 | Support | |
| 21 | | 1 | Shifter | See Page - Reference Number 030-0010/10 |
| 22 | | 1 | Support | See Page - Reference Number 030-0010/27 |
| 23 | 3778741M2 | 1 | Cable | Length 1570MM |
| 24 | 195234M1 | 1 | Clevis Pin | |
| 25 | 390972X1 | 1 | Washer Metric | |
| 26 | 354057X1 | 1 | Pin | |
| 27 | **3780395M2** | 2 | Switch,Indirect | |
| 28 | 3009512X1 | 1 | Bolt Metric | M12X60 |
| 29 | 3580502M1 | 1 | Decal | |
| 30 | 3581179M1 | 1 | Ring | Diameter 16 |
| 31 | 3616277M1 | 8 | Helmet | |
| 32 | 3618557M1 | 1 | Harness | |
| 33 | 3010477X1 | 1 | Nut Metric | M5 |
| 34 | 3320197M1 | 1 | Buzzer | |

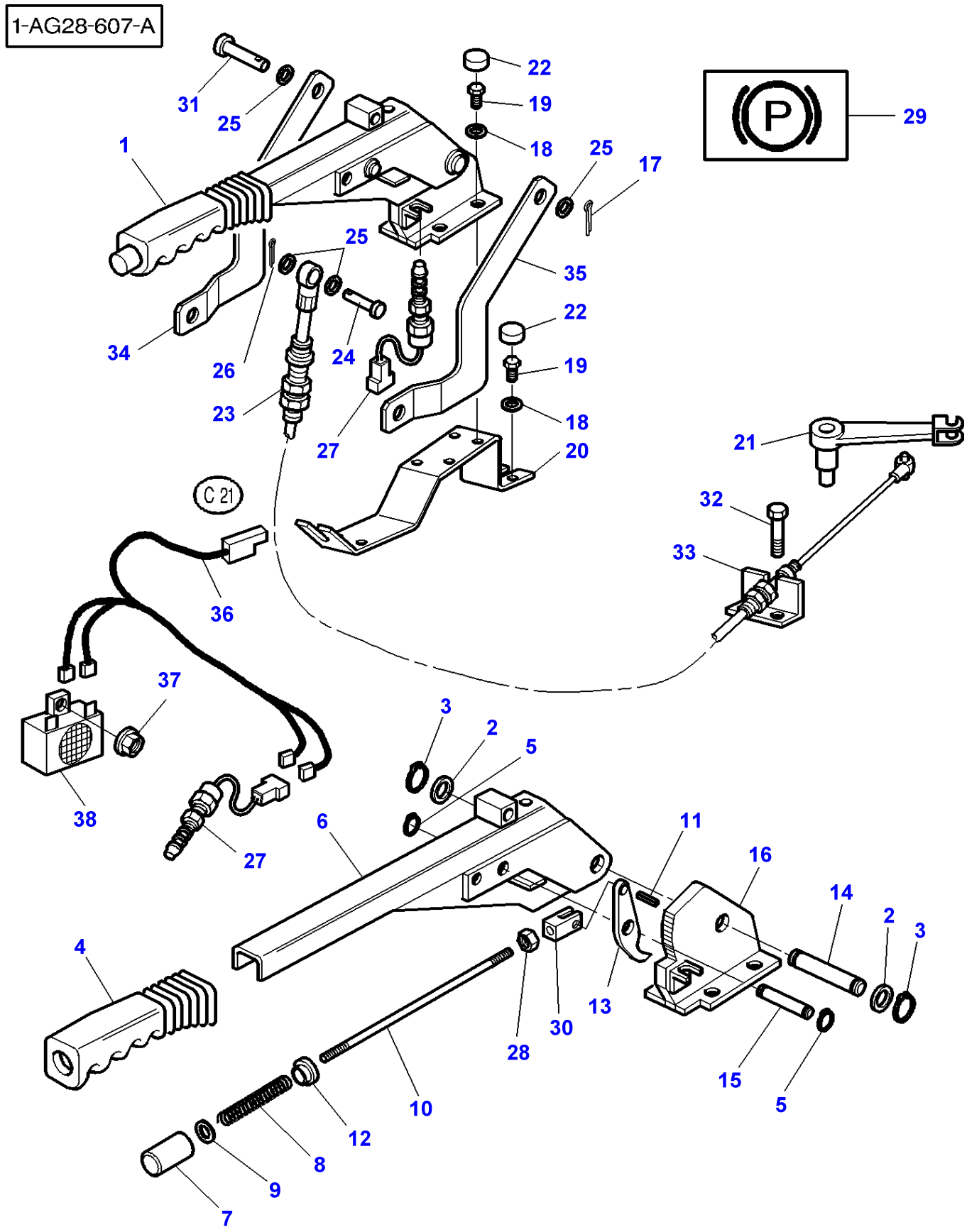
1-AG28-607-A
31
25
1
22
19
18
25
17
29
P
25
35
22
34
26
24
19
23
18
27
20
21
C 21
32
33
36
37
3
2
5
38
6
11
16
27
14
2
3
4
13
30
28
15
5
10
12
8
9
7

| Item | Part Number | Qty | Description | Comments |
|---|---|---|---|---|
| 1 | 3782572M91 | 1 | Handbrake Assy | |
| 2 | 1693980M1 | 2 | Washer | (1) |
| 3 | 339356X1 | 2 | Circlip | (1) |
| 4 | 1693965M1 | 1 | Handle | (1) |
| 5 | 1440988X1 | 2 | Circlip | (1) |
| 6 | | 1 | Hand Brake Lever | (1) Not serviced,order REF. No 1 |
| 7 | 3616904M1 | 1 | Button | (1) |
| 8 | 1693970M1 | 1 | Spring | (1) |
| 9 | 353754X1 | 1 | Washer | (1) |
| 10 | 3782646M1 | 1 | Rod | (1) |
| 11 | 3782649M1 | 1 | Pin | (1) |
| 12 | 3616905M1 | 1 | Washer | (1) |
| 13 | 3782645M1 | 1 | Hasp | (1) |
| 14 | 1693976M1 | 1 | Clevis Pin | (1) |
| 15 | 1693974M1 | 1 | Clevis Pin | (1) |
| 16 | 3779133M92 | 1 | Sector | (1) |
| 17 | 354057X1 | 1 | Pin | |
| 18 | 390972X1 | 8 | Washer Metric | |
| 19 | 339123X1 | 8 | Hex. Sock. Screw | M8X20 |
| 20 | 3782571M2 | 1 | Support | |
| 21 | 3716502M2 | 1 | Shifter | |
| 22 | 3616277M1 | 8 | Helmet | |
| 23 | 3782575M2 | 1 | Cable | Length 1510MM |
| 24 | 195235M1 | 1 | Clevis Pin | |
| 25 | 390972X1 | 4 | Washer Metric | |
| 26 | 354057X1 | 1 | Pin | |
| 27 | **3780395M2** | 2 | Switch,Indirect | |
| 28 | 3782647M1 | 1 | Nut | (1) |
| 29 | 3580502M1 | 1 | Decal | |
| 30 | 3782648M1 | 1 | Clevis | (1) |
| 31 | 195237M1 | 1 | Clevis Pin | |
| 32 | 339228X1 | 2 | Screw Metric | M8X12 |
| 33 | 3716543M1 | 1 | Support | |
| 34 | 3782574M1 | 1 | Rod Link | Right Hand |
| 35 | 3782573M1 | 1 | Rod Link | Left Hand |
| 36 | 3618557M1 | 1 | Harness | |
| 37 | 3010477X1 | 1 | Nut Metric | M5 |
| 38 | 700705642 | 1 | Buzzer | |

1-AG64-003-B

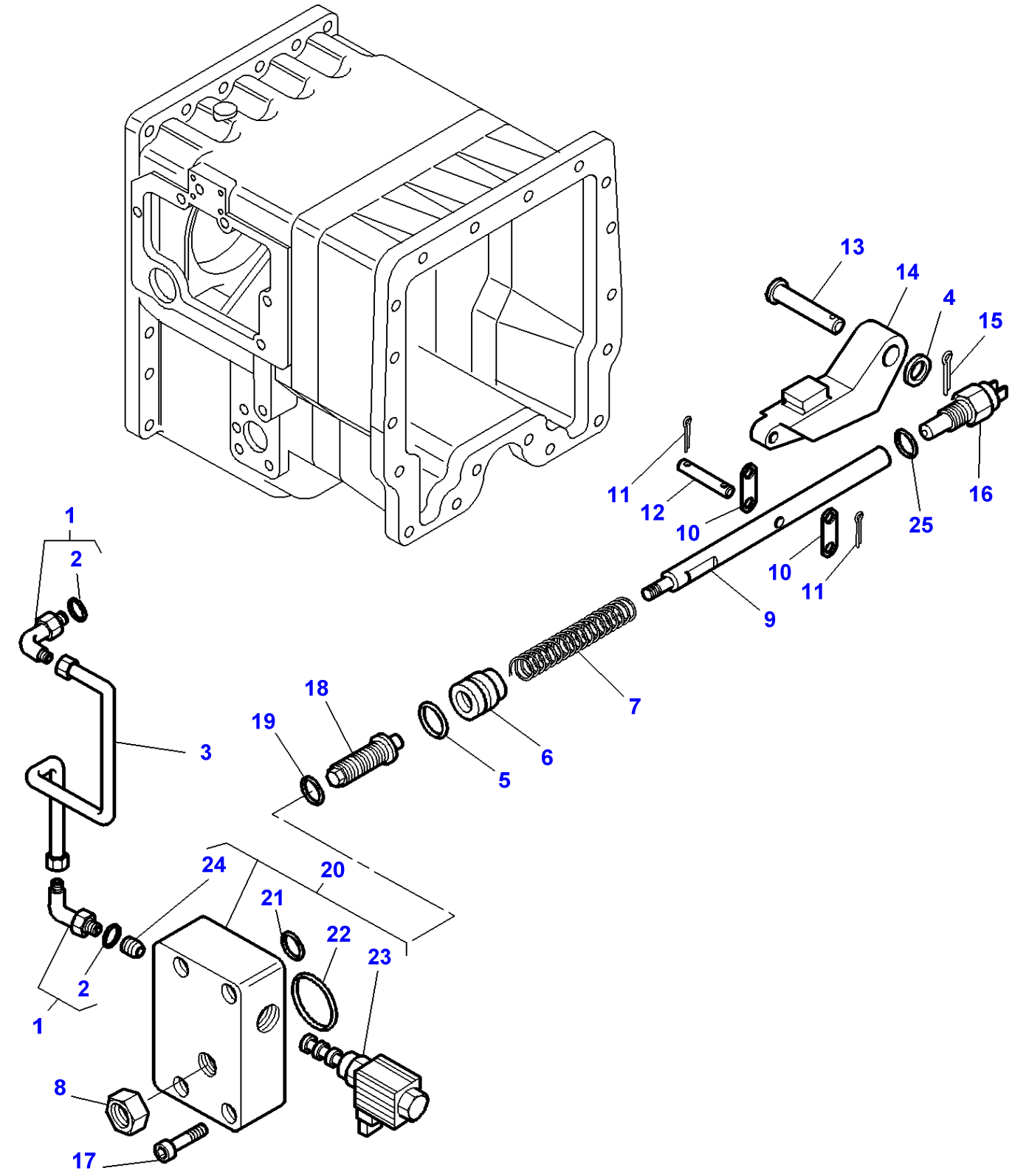

| Item | Part Number | Qty | Description | Comments |
|---|---|---|---|---|
| 1 | 3019412X91 | 2 | Elbow | |
| 2 | 3019395X1 | 1 | O Ring | (1) |
| 3 | 3791287M1 | 1 | Tube | [A] |
| 4 | 3791380M1 | 1 | Washer | Diameter 19 MM |
| 5 | 366434X1 | 1 | O Ring | |
| 6 | 3791570M1 | 1 | Piston | |
| 7 | 3716228M1 | 1 | Spring | |
| 8 | **3384600M2** | 1 | Nut Special | Diameter M18 |
| 9 | 3791571M2 | 1 | Stem | |
| 10 | 3716548M1 | 2 | Rod Link | |
| 11 | 1442993X1 | 2 | Pin | Diameter 3,2 MM |
| 12 | 3791124M2 | 2 | Clevis Pin | |
| 13 | 3791125M4 | 1 | Clevis Pin | |
| 14 | 3716551M4 | 1 | Ratchet | |
| 15 | 339531X1 | 1 | Pin | Diameter 4 MM |
| 16 | **3792196M1** | 1 | Switch,Indirect | |
| 17 | 3001758X1 | 4 | Screw Metric | M6x50 |
| 18 | 3790951M1 | 1 | Screw | |
| 19 | **3007118X1** | 1 | O Ring | |
| 20 | 3791141M91 | 1 | Block | |
| 21 | 3019467X1 | 1 | O Ring | (20) Diameter 10,1x1,6 MM |
| 22 | 364281X1 | 1 | O Ring | (20) Diameter 47,35x1,78 MM |
| 23 | **3791106M1** | 1 | Electrovalve | (20) |
| 24 | **3791107M1** | 1 | Non Return Valve | (20) |
| 25 | 3010786X1 | 1 | Gasket | Up to Serial or Engine Number H244017 |
| | 3010890X1 | 1 | Bush | From Serial or Engine Number H244018 |

**FOOTNOTE [A]** WITH PUMP 45CC

1-AG02-603-B

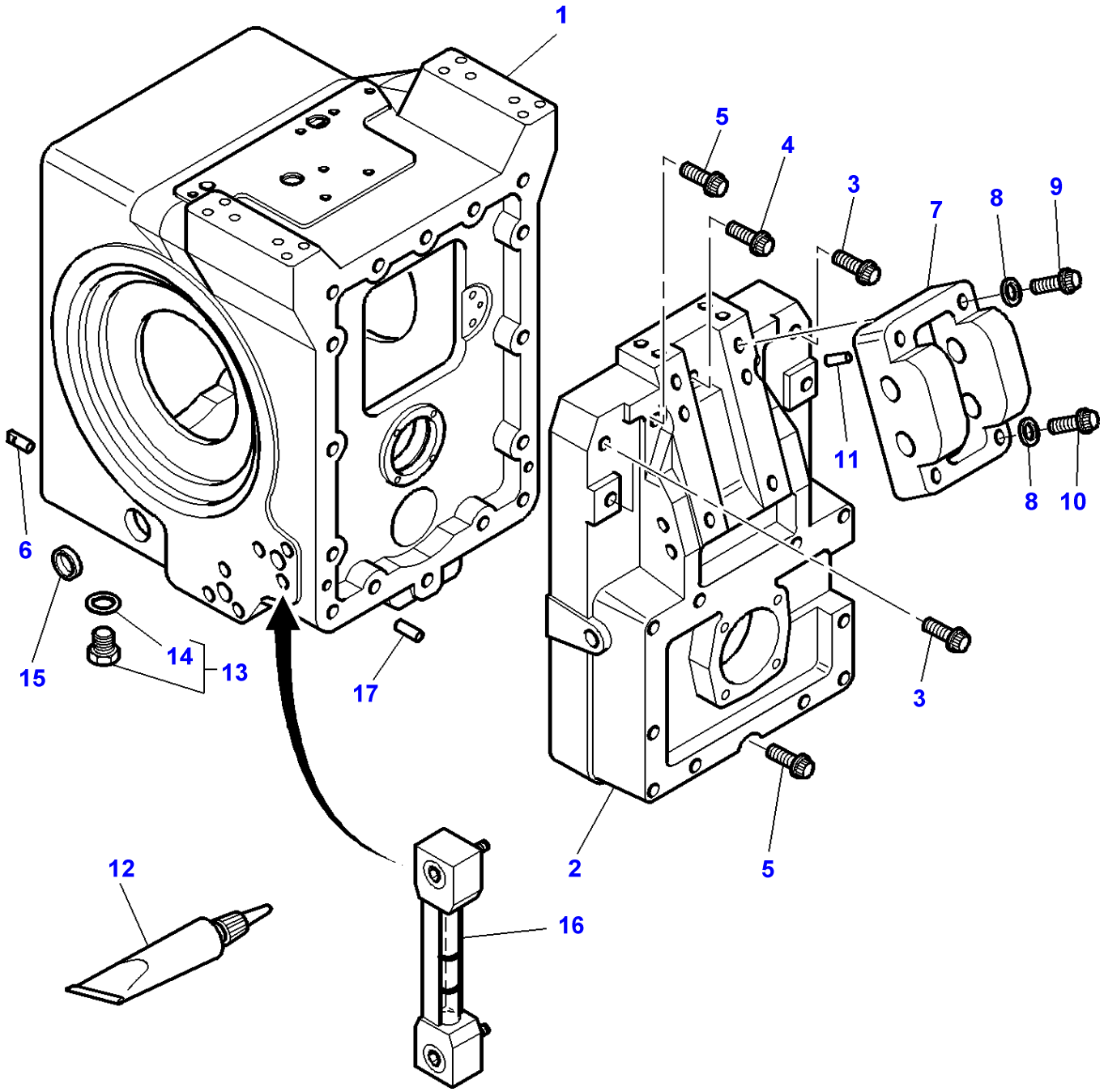

| Item | Part Number | Qty | Description | Comments |
|---|---|---|---|---|
| 1 | 3716461M5 | 1 | Housing | Up to Serial or Engine Number H011031 |
| | 3792105M1 | 1 | Housing | From Serial or Engine Number H011032 |
| 2 | 3716000M2 | 1 | Housing | |
| 3 | 3010556X1 | 4 | Screw Metric | M20X70 |
| 4 | 3010557X1 | 1 | Screw Metric | M20X100 |
| 5 | 3010558X1 | 3 | Screw Metric | M20X120 |
| 6 | 3716496M2 | 1 | Centraliser | |
| 7 | 3716917M3 | 1 | Lug | |
| 8 | 385365X1 | 4 | Washer | Diameter 20 MM<br>Diameter 37 MM<br>Thickness 5 MM |
| 9 | 3010575X1 | 2 | Screw | M20X130 |
| 10 | 3010563X1 | 2 | Screw | M20X90 |
| 11 | 3716918M2 | 2 | Centraliser | |
| 12 | 3900613M2 | X | Loctite | |
| 13 | 3583994M91 | 1 | Plug | M18 |
| 14 | 3019397X1 | 1 | O Ring | (13) |
| 15 | 3010760X1 | 2 | Plug | Diameter 46 MM |
| 16 | 3790931M1 | 1 | Oil Dipstick | |
| 17 | 3385839M2 | 2 | Pin | Length 22,2 MM |

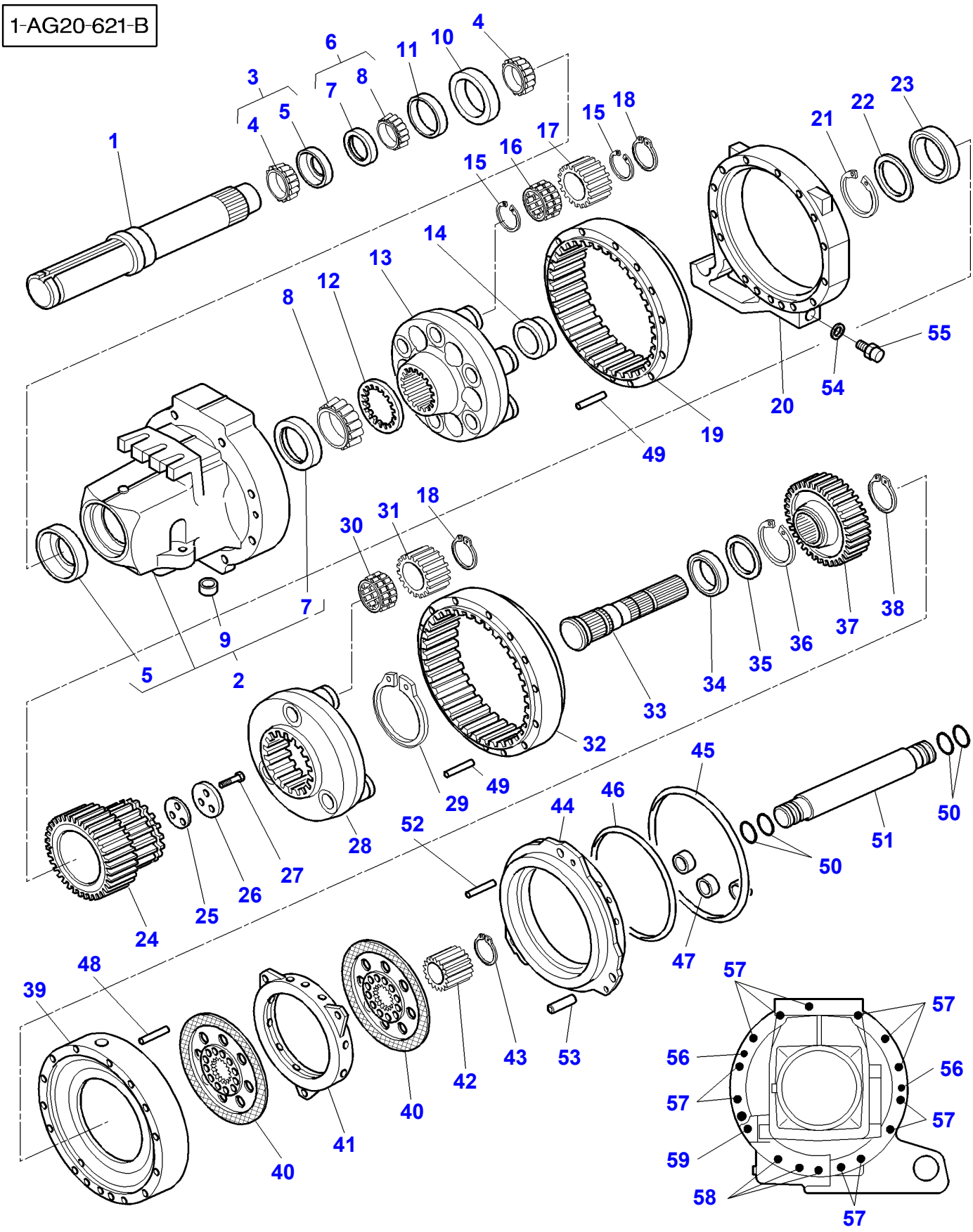
1-AG20-621-B
1
2
3
4
5
6
7
8
9
10
11
12
13
14
15
16
17
18
19
20
21
22
23
24
25
26
27
28
29
30
31
32
33
34
35
36
37
38
39
40
41
42
43
44
45
46
47
48
49
50
51
52
53
54
55
56
57
58
59

| Item | Part Number | Qty | Description | Comments |
|---|---|---|---|---|
| 1 | 3716264M3 | 2 | Shaft | Diameter 110 MM |
| | | | | Length 855 MM |
| 2 | 3791238M14 | 1 | Axle Housing | Right Hand |
| | 3791237M14 | 1 | Axle Housing | Left Hand |
| 3 | 3010685X91 | 2 | Bearing Assy | |
| 4 | | 1 | Bearing Cone | (3) |
| | | | | Not serviced,order REF. 3 |
| 5 | | 1 | Cone Cup | (3) |
| | | | | Not serviced,order REF. 3 |
| 6 | 3010672X91 | 2 | Bearing Assy | |
| 7 | | 1 | Cone Cup | (6) |
| | | | | Not serviced,order REF. 6 |
| 8 | | 1 | Bearing Cone | (6) |
| | | | | Not serviced,order REF. 6 |
| 9 | 391560X1 | 1 | Plug | (2) |
| | | | | Diameter 30 MM |
| | | | | Up to Serial or Engine Number H011031 |
| 10 | 3716210M1 | 2 | Gasket | Diameter 190 MM |
| | | | | Diameter 165 MM |
| 11 | 3716344M1 | 2 | Bush | Diameter 165 MM |
| | | | | Diameter 120 MM |
| 12 | 3716094M1 | 2 | Washer | |
| 13 | 3716483M2 | 2 | Carrier | |
| 14 | 3716093M1 | 2 | Washer | |
| 15 | 3716329M1 | 24 | Segment | |
| 16 | 3010734X1 | 12 | Bearing Assy | |
| 17 | 3792442M1 | 12 | Diff Pinion | Number of teeth/spines 20 |
| 18 | 1440478X1 | 18 | Circlip | |
| 19 | 3792439M1 | 1 | Crownwheel | Number of teeth/spines 81 |
| 20 | 3716207M2 | 2 | Spacer | |
| 21 | 1441458X1 | 2 | Ring | |
| 22 | 3716498M1 | 2 | Washer | |
| 23 | 1442672X1 | 2 | Bear. 6016 | |
| 24 | 3792441M1 | 2 | Planet | Number of teeth/spines 39 |
| 25 | 3716271M1 | | Chock | Thickness 0,005 MM |
| | 3716272M1 | | Chock | Thickness 0,10 MM |
| | 3716273M1 | | Chock | Thickness 0,25 MM |
| | 3716274M1 | | Chock | Thickness 0,50 MM |
| | 3716776M1 | | Chock | Thickness 1 MM |
| | 3716777M1 | | Chock | Thickness 2 MM |
| 26 | 3716267M1 | 2 | Washer | Thickness 10 MM |
| 27 | 3019853X1 | 6 | Bolt Metric | M12X60 |
| 28 | 3716484M2 | 2 | Carrier | |
| 29 | 392782X1 | 2 | Clip | |
| 30 | 3010525X1 | 6 | Bearing Assy | |
| 31 | 3716485M2 | 6 | Diff Pinion | Number of teeth/spines 20 |
| 32 | 3792440M1 | 2 | Crownwheel | Number of teeth/spines 81 |
| 33 | 3716508M4 | 1 | Planet | Left Hand |
| | | | | Length 362 MM |
| | 3716471M4 | 1 | Planet | Right Hand |
| | | | | Length 292 MM |
| 34 | 339673X1 | 2 | Bear. 6013 | |
| 35 | 3716416M1 | 2 | Washer | |
| 36 | 390613X1 | 2 | Clip | |
| 37 | 3716487M3 | 2 | Planet | Number of teeth/spines 39 |
| 38 | 1440532X1 | 2 | Circlip | |
| 39 | 3716208M2 | 1 | Spacer | Left Hand |
| | | | | Up to Serial or Engine Number H138016 |
| | 3792134M1 | 1 | Spacer | Left Hand |
| | | | | From Serial or Engine Number H138017 |
| | 3716209M2 | 1 | Spacer | Right Hand |
| | | | | Up to Serial or Engine Number H138016 |
| | 3792135M1 | 1 | Spacer | Right Hand |
| | | | | From Serial or Engine Number H138017 |
| 40 | 3716223M1 | 4 | Disc | |
| 41 | 3716249M3 | 2 | Plate | |
| 42 | 3582194M1 | 2 | Hub | |
| 43 | 380005X1 | 2 | Clip | |
| 44 | 3716752M4 | 1 | Piston | Right Hand |
| | | | | Replace and repair. Old not interchangeable with new 3716753M3 |
| | 3716752M4 | 1 | Piston | Left Hand |

| Item | Part Number | Qty | Description | Comments |
|---|---|---|---|---|
| 45 | 3716252M1 | 1 | O Ring | |
| 46 | 3716253M1 | 1 | O Ring | |
| 47 | 391560X1 | 6 | Plug | Diameter 30 MM |
| 48 | 1612150M1 | 2 | Clevis Pin | Diameter 12,7 MM<br>Length 29 MM |
| 49 | 3615934M1 | 4 | Clevis Pin | Diameter 12,7 MM<br>Length 82 MM |
| 50 | 70923650 | 8 | O Ring | |
| 51 | 3791260M1 | 1 | Tube | |
| 52 | 3716768M1 | 4 | Clevis Pin | Diameter 16 MM<br>Length 98 MM |
| 53 | 3791640M1 | 2 | Clevis Pin | [A]<br>Diameter 16 MM<br>Length 98 MM |
| 54 | 3019397X1 | 2 | O Ring | |
| 55 | 3583993M1 | 2 | Plug | |
| 56 | 3010564X1 | 4 | Screw | M12x265 |
| 57 | 3716517M1 | 24 | Stud | M16x363 |
| 57 | 3010875X1 | 24 | Washer | M16 |
| 57 | 3019871X1 | 24 | Nut Metric | M16 |
| 58 | 3791261M1 | 6 | Stud | M16x378 |
| 58 | 3791824M1 | 6 | Stud | M16x388 |
| 58 | 3010875X1 | 6 | Washer | M16 |
| 58 | 3019871X1 | 6 | Nut Metric | M16 |
| 59 | 3791824M1 | 2 | Stud | M16x388 |
| 59 | 3010875X1 | 2 | Washer | M16 |
| 59 | 3019871X1 | 2 | Nut Metric | M16 |

**FOOTNOTE [A]** WITH 1 HOLE

1-AG09-002-A

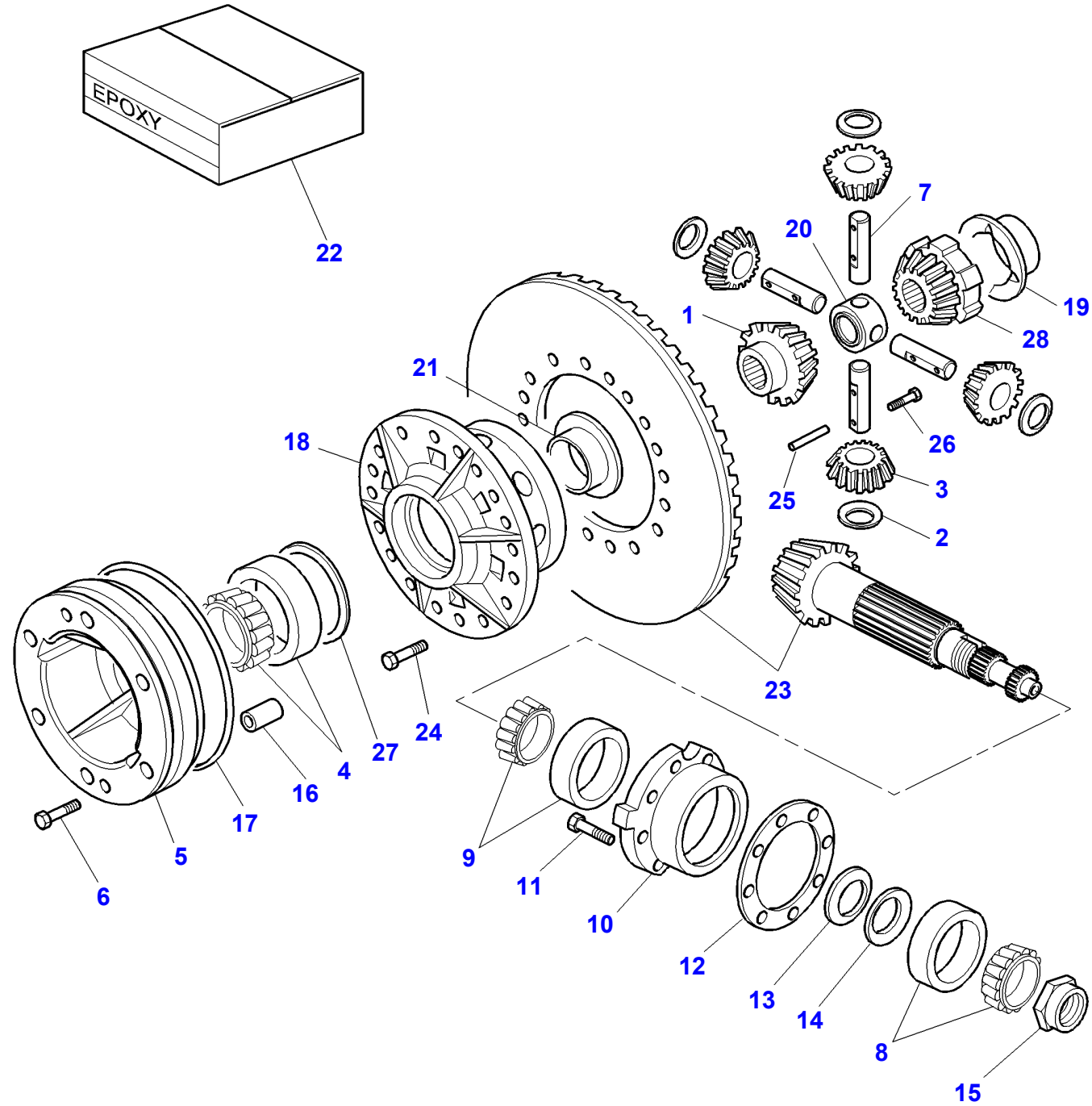
EPOXY
22
7
20
19
1
28
21
18
26
25
3
2
23
24
27
4
16
17
5
6
9
11
10
12
13
14
8
15

| Item | Part Number | Qty | Description | Comments |
|---|---|---|---|---|
| 1 | 3716473M4 | 1 | Pinion | |
| 2 | 3791227M2 | 4 | Washer | |
| 3 | 3716463M1 | 4 | Diff Pinion | |
| 4 | 3010720X91 | 1 | Bearing Assy | |
| 5 | 3716246M3 | 1 | Support | |
| 6 | 3019899X1 | 6 | Bolt Metric | M12X50 |
| 7 | 3716470M2 | 4 | Clevis Pin | |
| 8 | 3010720X91 | 1 | Bearing Assy | |
| 9 | 3010735X91 | 1 | Bearing Assy | |
| 10 | 3716430M2 | 1 | Case Assy | |
| 11 | 3010010X1 | 4 | Screw | M12X40 |
| | 3010770X1 | 4 | Screw Metric | M12X35 |
| 12 | 3716566M1 | X | Shim | Thickness 0,05MM |
| | 3716567M1 | X | Shim | Thickness 0,1MM |
| | 3716568M1 | X | Shim | Thickness 0,2MM |
| | 3716569M1 | X | Shim | Thickness 0,3MM |
| 13 | 3716422M1 | 1 | Washer | |
| 14 | 3792328M2 | X | Chock | Thickness 0,65MM |
| | 3716431M2 | X | Chock | Thickness 0,7MM |
| | 3792329M2 | X | Chock | Thickness 0,75MM |
| | 3716432M2 | X | Chock | Thickness 0,8MM |
| | 3792330M2 | X | Chock | Thickness 0,85MM |
| | 3716433M2 | X | Chock | Thickness 0,9MM |
| | 3792331M2 | X | Chock | Thickness 0,95MM |
| | 3716434M2 | X | Chock | Thickness 1MM |
| 15 | 3716450M1 | 1 | Nut Special | M60 |
| 16 | 1611277M1 | 1 | Pin | Diameter 16X20 |
| 17 | 3716335M1 | 1 | O Ring | |
| 18 | 3716464M4 | 1 | Case Assy | |
| 19 | 3716472M3 | 1 | Washer | |
| 20 | 3716059M4 | 1 | Crosspiece | |
| 21 | 3716327M3 | 1 | Bush | |
| 22 | 3930274M92 | 1 | Loctite | |
| 23 | 3716813M93 | 1 | Kit, Bevel Gear | 11X38 |
| 24 | 3010783X1 | 18 | Screw Metric | M16X40 |
| 25 | 3384279M1 | 4 | Needle | |
| 26 | 1441000X1 | 4 | Screw Metric | M8X16 |
| 27 | 3791616M1 | 1 | Chock | Thickness 0.05 MM |
| | 3791617M1 | 1 | Chock | Thickness 0.1 MM |
| | 3791618M1 | 1 | Chock | Thickness 0.3 MM |
| 28 | 3716474M4 | 1 | Planet | |

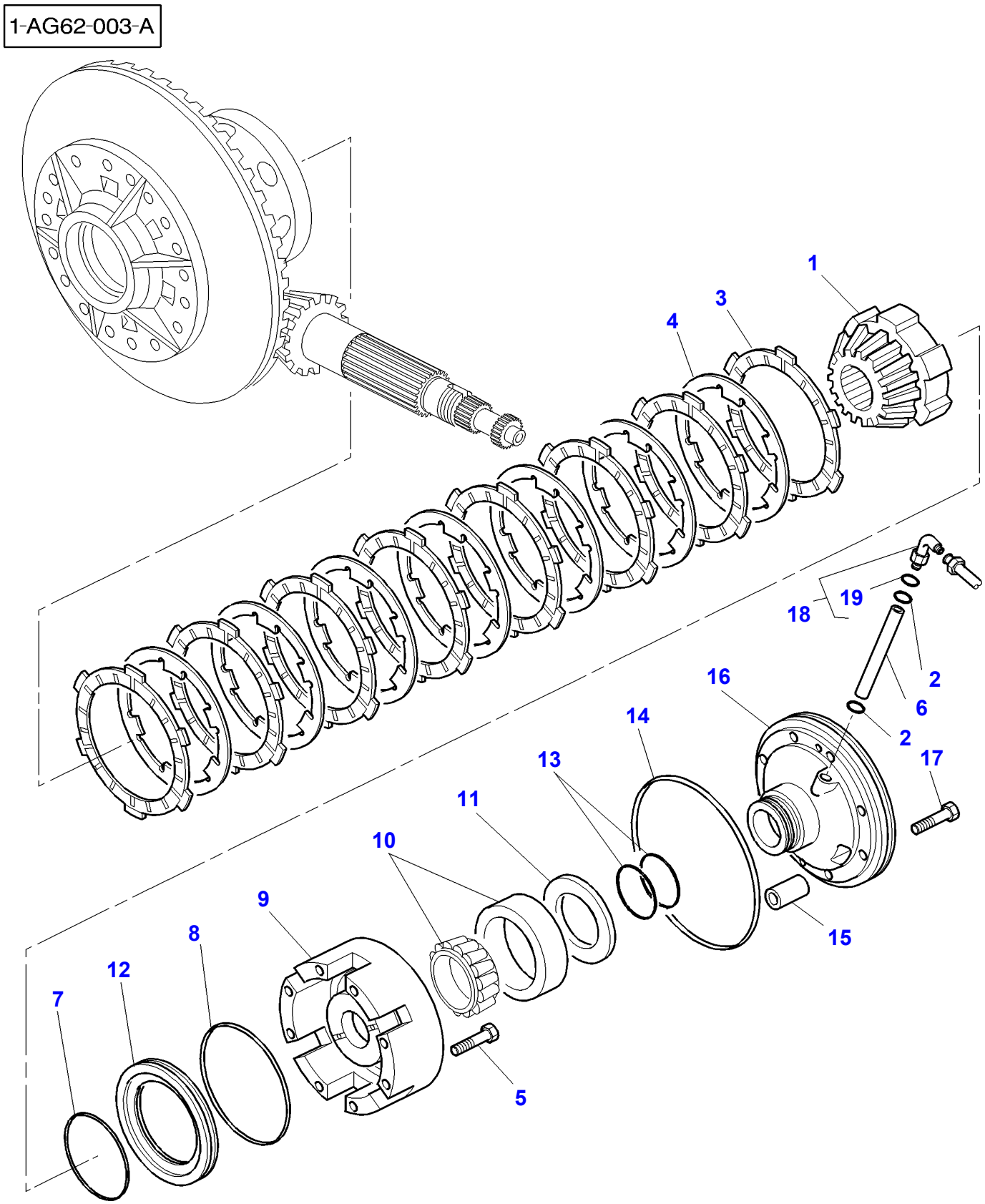
1-AG62-003-A
1
3
4
18
19
2
6
2
16
14
13
17
11
10
9
8
12
7
15
5

| Item | Part Number | Qty | Description | Comments |
|---|---|---|---|---|
| 1 | 3716474M4 | 1 | Planet | |
| 2 | 377494X1 | 2 | O Ring | |
| 3 | 3616741M1 | 8 | Disc | |
| 4 | 3616742M1 | 7 | Counterplate | |
| 5 | 3010784X1 | 8 | Screw Metric | M12X110 |
| 6 | 3716571M2 | 1 | Tube | |
| 7 | 70923591 | 1 | O Ring | |
| 8 | 359008X1 | 1 | O Ring | |
| 9 | 3716562M12 | 1 | Case Assy | |
| 10 | 1850909M91 | 1 | Bearing Assy | |
| 11 | 3716479M1 | X | Chock | Thickness 0,5 MM |
| | 3716480M1 | X | Chock | Thickness 0,6 MM |
| | 3791782M1 | | Chock | Thickness 0,7 MM |
| | 3716486M1 | X | Chock | Thickness 0,8 MM |
| | 3791783M1 | | Chock | Thickness 0,9 MM |
| 12 | 3716467M1 | 1 | Piston | |
| 13 | 3716580M3 | 2 | Segment | |
| 14 | 3716335M1 | 1 | O Ring | |
| 15 | 1611277M1 | 1 | Pin | Diameter 16X20 |
| 16 | 3716247M13 | 1 | Support | |
| 17 | 3019899X1 | 6 | Bolt Metric | M12X50 |
| 18 | 3385713M91 | 1 | Union | |
| 19 | 831497M1 | 1 | O Ring | (18) |

| Page Title | Page Number |
|---|---|
| Electronic Lift - Lift Arms - With Heavy Duty Rear Axle Housing - Composite Reducer | 040-0005 |
| Linkage - Lift Cylinders | 040-0010 |
| Linkage - Top Cat 2 And 3 | 040-0015 |
| Linkage - Top Link With Hook End | 040-0020 |
| Linkage - Top Link With Hook End | 040-0025 |
| Linkage - Lower Cat 2 And 3 - Up to Serial or Engine Number - H197002 | 040-0030 |
| Linkage - Lower Cat 2 And 3 - From Serial or Engine Number - H197003 | 040-0035 |
| Hitch | 040-0040 |
| Hitch - Hitch With Ring-Bolt | 040-0045 |
| Hitch - Cramer | 040-0050 |
| Hitch - Cramer | 040-0055 |
| Linkage - Tube Stabilizers | 040-0060 |
| Linkage - Tube Stabilizers - For Germany Only | 040-0065 |

1-AP73-001-D

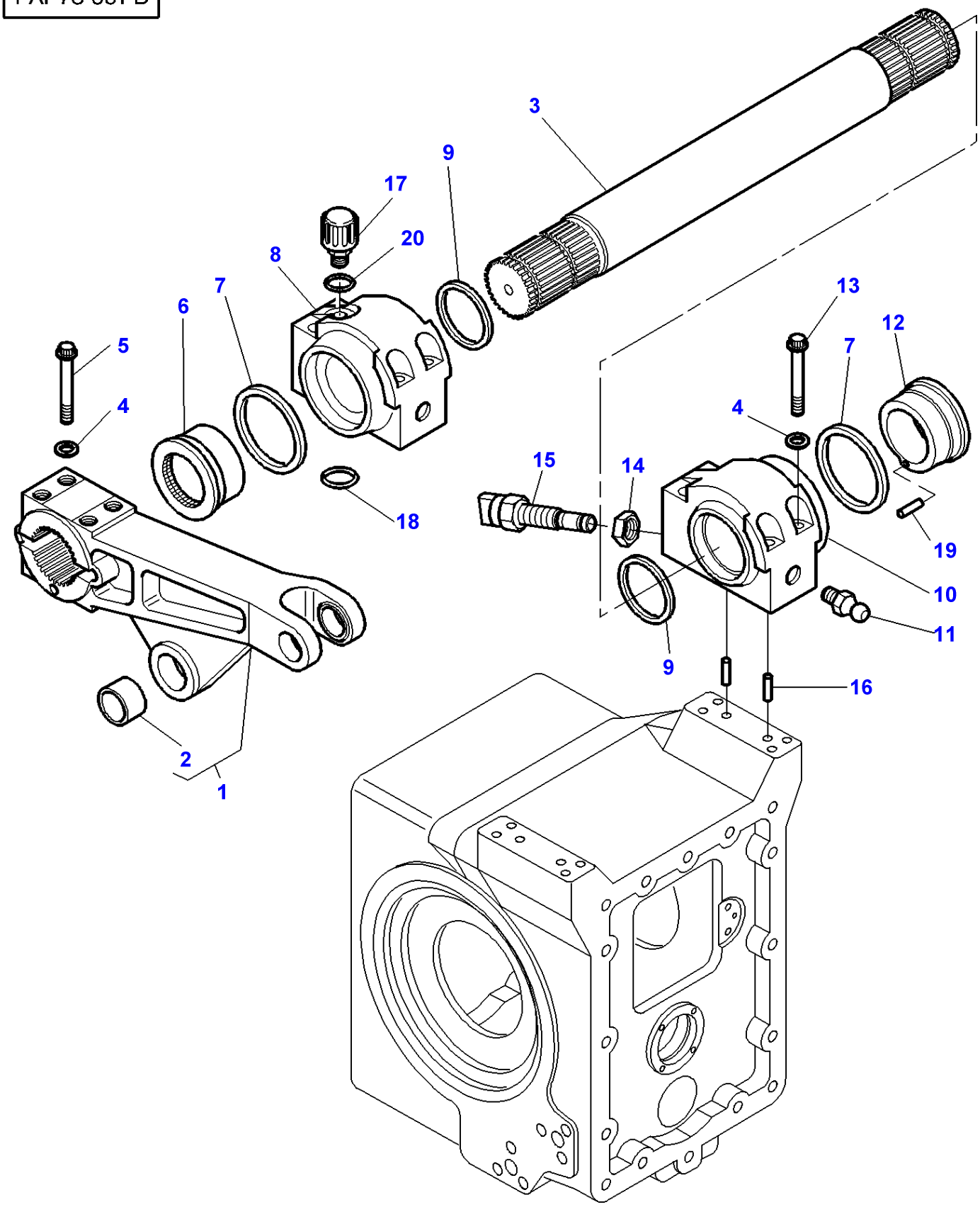

| Item | Part Number | Qty | Description | Comments |
|---|---|---|---|---|
| 1 | 3716511M12 | 1 | Arm | Left Hand |
| | 3716527M12 | 1 | Arm | Right Hand |
| 2 | 3716510M2 | 1 | Bush | (1) |
| 3 | 3716538M2 | 1 | Shaft | |
| 4 | 3010875X1 | 16 | Washer | Diameter 16 MM |
| 5 | 3019874X1 | 8 | Screw Metric | M16x115 |
| 6 | 3716522M2 | 1 | Cam | Left Hand |
| 7 | 3716689M1 | 2 | Gasket | |
| 8 | 3716506M13 | 1 | Bearing Carrier | Left Hand |
| 9 | 3716616M1 | 2 | Gasket | |
| 10 | 3716521M14 | 1 | Bearing Carrier | Right Hand |
| 11 | 1441858X1 | 2 | Grease Nipple | |
| 12 | 3716513M4 | 1 | Cam | Right Hand |
| 13 | 3010566X1 | 8 | Screw Metric | M16x130 |
| 14 | 3385674M1 | 1 | Nut | M24 |
| 15 | **3712728M3** | 1 | Inductive Taker | |
| 16 | 3385839M2 | 4 | Pin | |
| 17 | 3716934M1 | 1 | Breather | |
| 18 | 364105X1 | 1 | O Ring | |
| 19 | 3019304X1 | 1 | Spirol Pin | |
| 20 | 3019396X1 | 1 | O Ring | |

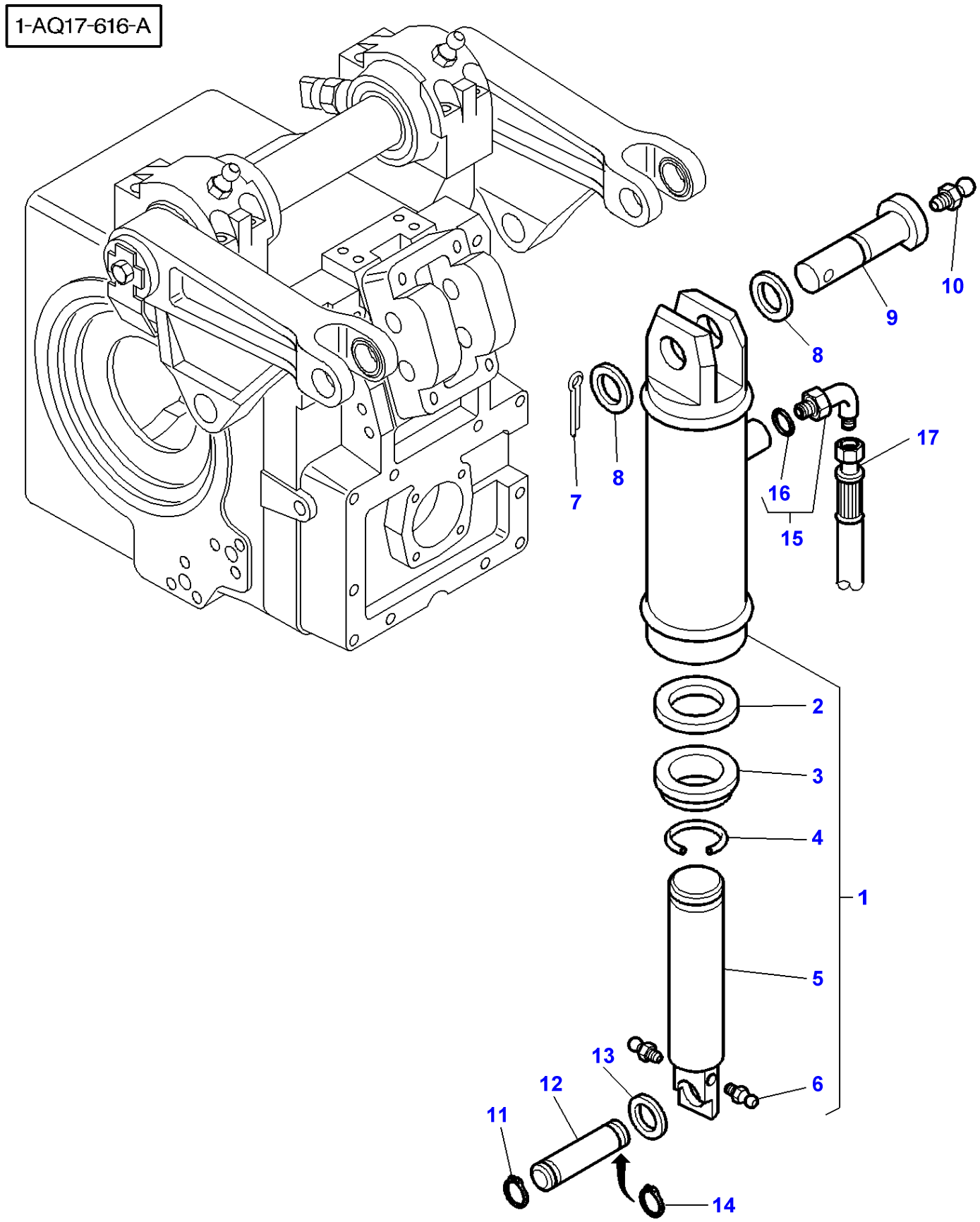
1-AQ17-616-A
10
9
8
17
7
8
16
15
2
3
4
1
5
13
12
6
11
14

| Item | Part Number | Qty | Description | Comments |
|---|---|---|---|---|
| 1 | 3716602M93 | 2 | Lift Cylinder | Diameter 105MM |
| 2 | 3902884M1 | 1 | Gasket | (1) |
| 3 | 3902883M1 | 1 | Wiper | (1) |
| 4 | 3902886M1 | 1 | Ring | (1) |
| 5 | 3902885M1 | 1 | Cylinder Rod | (1) |
| 6 | 1441858X1 | 2 | Grease Nipple | (1) |
| 7 | 1442981X1 | 2 | Pin | |
| 8 | 3716678M2 | 4 | Washer | Diameter 41 MM<br>Diameter 60 MM<br>Thickness 5,5 MM |
| 9 | 3716609M1 | 2 | Clevis Pin | |
| 10 | 1441858X1 | 2 | Grease Nipple | |
| 11 | 339605X1 | 2 | Circlip | |
| 12 | 3716600M1 | 2 | Clevis Pin | |
| 13 | 3716679M2 | 2 | Washer | Diameter 61MM<br>Diameter 70MM<br>Thickness 4MM |
| 14 | 339605X1 | 2 | Circlip | |
| 15 | 3019420X91 | 2 | Union | |
| 16 | 3019398X1 | 1 | O Ring | (15) |
| 17 | 3716386M1 | 1 | Tube | Left Hand |
| | 3716384M1 | 1 | Tube | Right Hand |

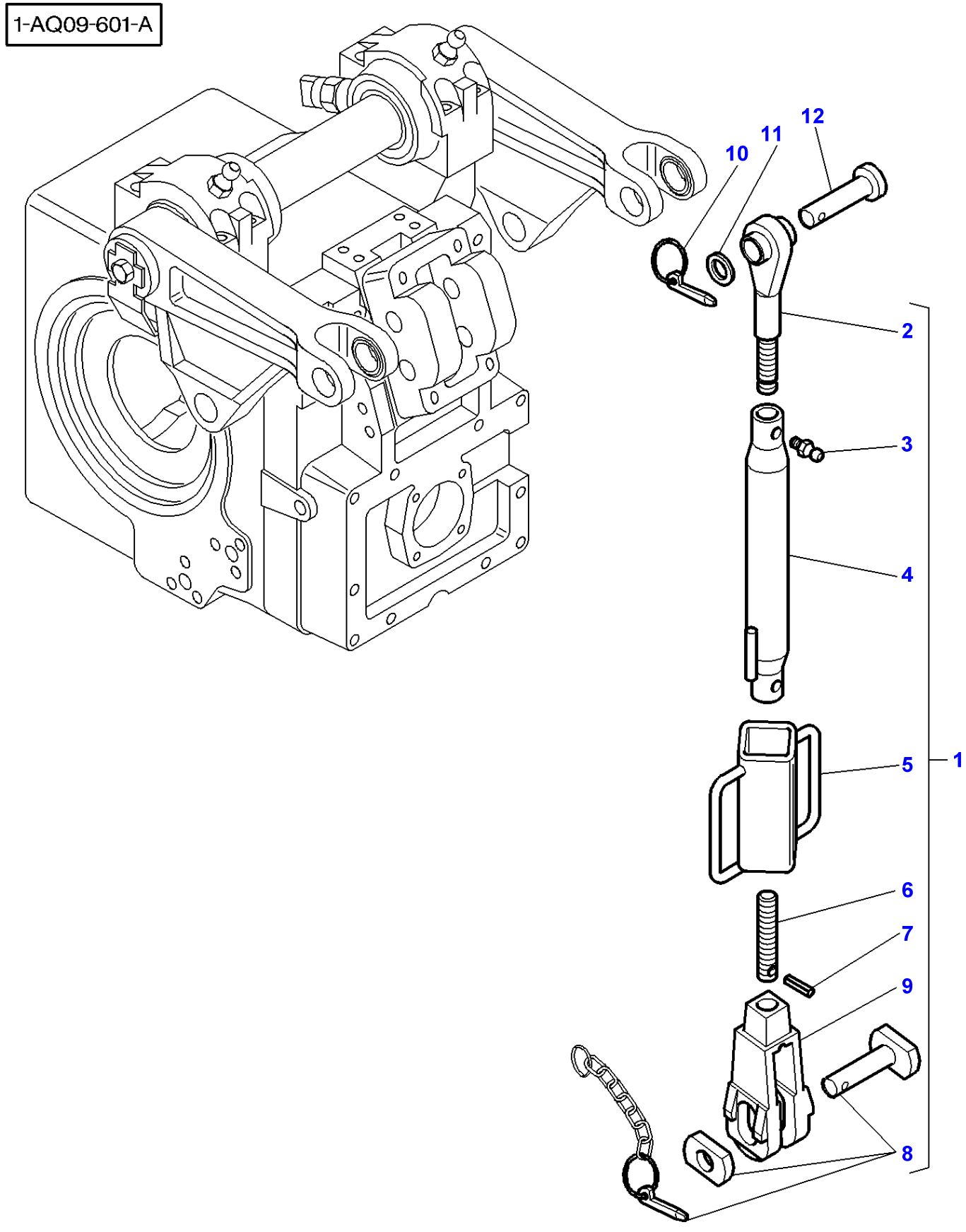
1-AQ09-601-A
12
11
10
2
3
4
5
1
6
7
9
8

| Item | Part Number | Qty | Description | Comments |
|---|---|---|---|---|
| 1 | 3716615M2 | 2 | Draglink | |
| 2 | 3902790M1 | 1 | Toggle | (1) |
| 3 | | 2 | Greaser | (1) Not serviced,order REF. 4 |
| 4 | 3902788M1 | 1 | Tube | (1) |
| 5 | 3902787M1 | 1 | Handle | (1) |
| 6 | 3902785M1 | 1 | Clevis Pin | (1) |
| 7 | 3902786M1 | 1 | Pin | (1) |
| 8 | 3902789M91 | 1 | Parts Pack | (1) |
| 9 | 3902784M1 | 1 | Clevis | (1) |
| 10 | 3387161M2 | 2 | Pin | |
| 11 | 3716148M1 | 2 | Washer | Diameter 29 MM |
| 12 | 3716661M1 | 2 | Clevis Pin | |

1-AQ07-607-A

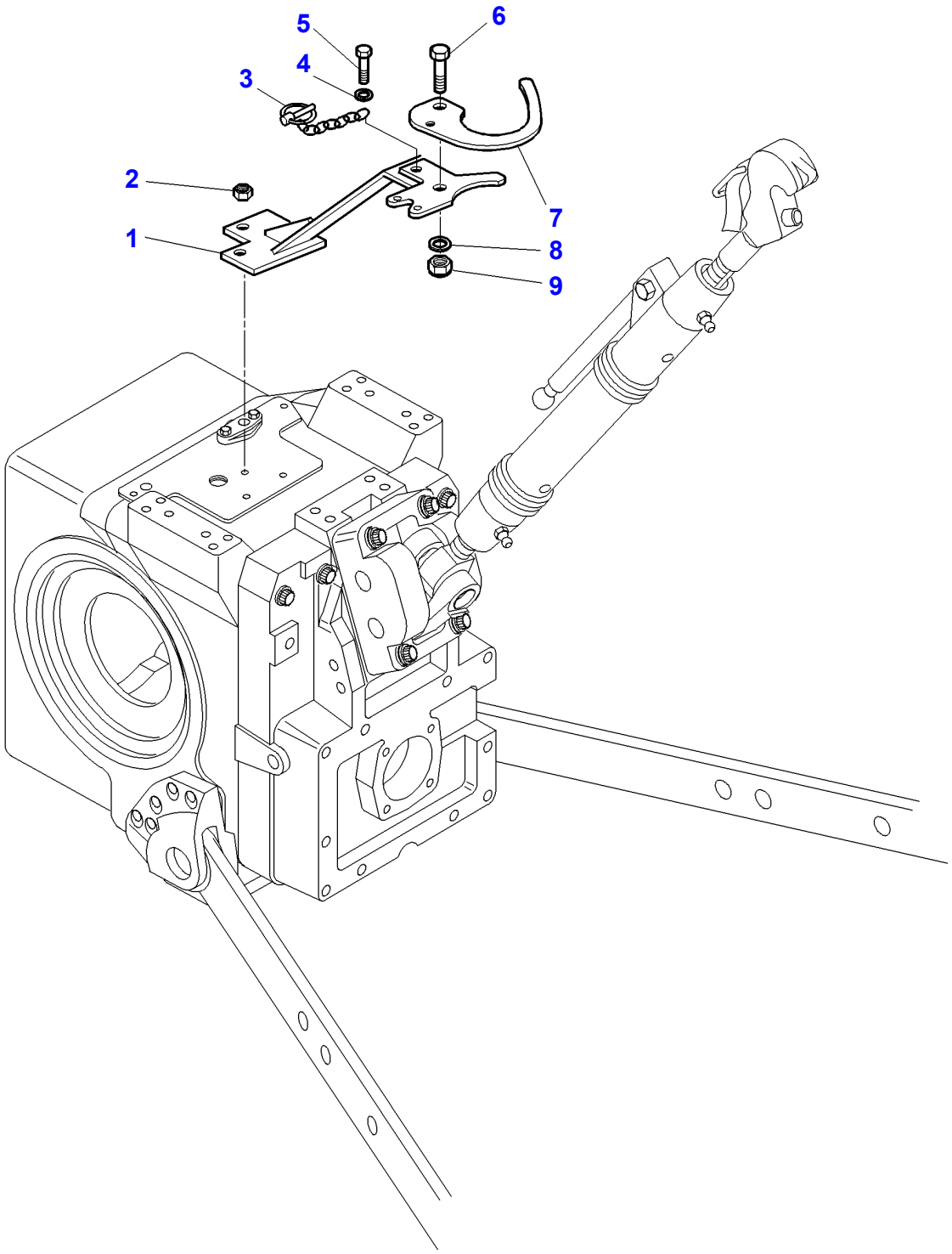

| Item | Part Number | Qty | Description | Comments |
|---|---|---|---|---|
| 1 | 3791641M2 | 1 | Support | |
| 2 | 1440330X1 | 3 | Locknut | |
| 3 | 3712199M91 | 1 | Chain | |
| 4 | 390971X1 | 1 | Washer | |
| 5 | 339560X1 | 1 | Hex. Sock. Screw | M6X16MM |
| 6 | 339009X1 | 1 | Hex. Sock. Screw | M8X35MM |
| 7 | 3791881M2 | 1 | Latch | |
| 8 | 390972X1 | 1 | Washer Metric | |
| 9 | 394367X1 | 1 | Locknut | |

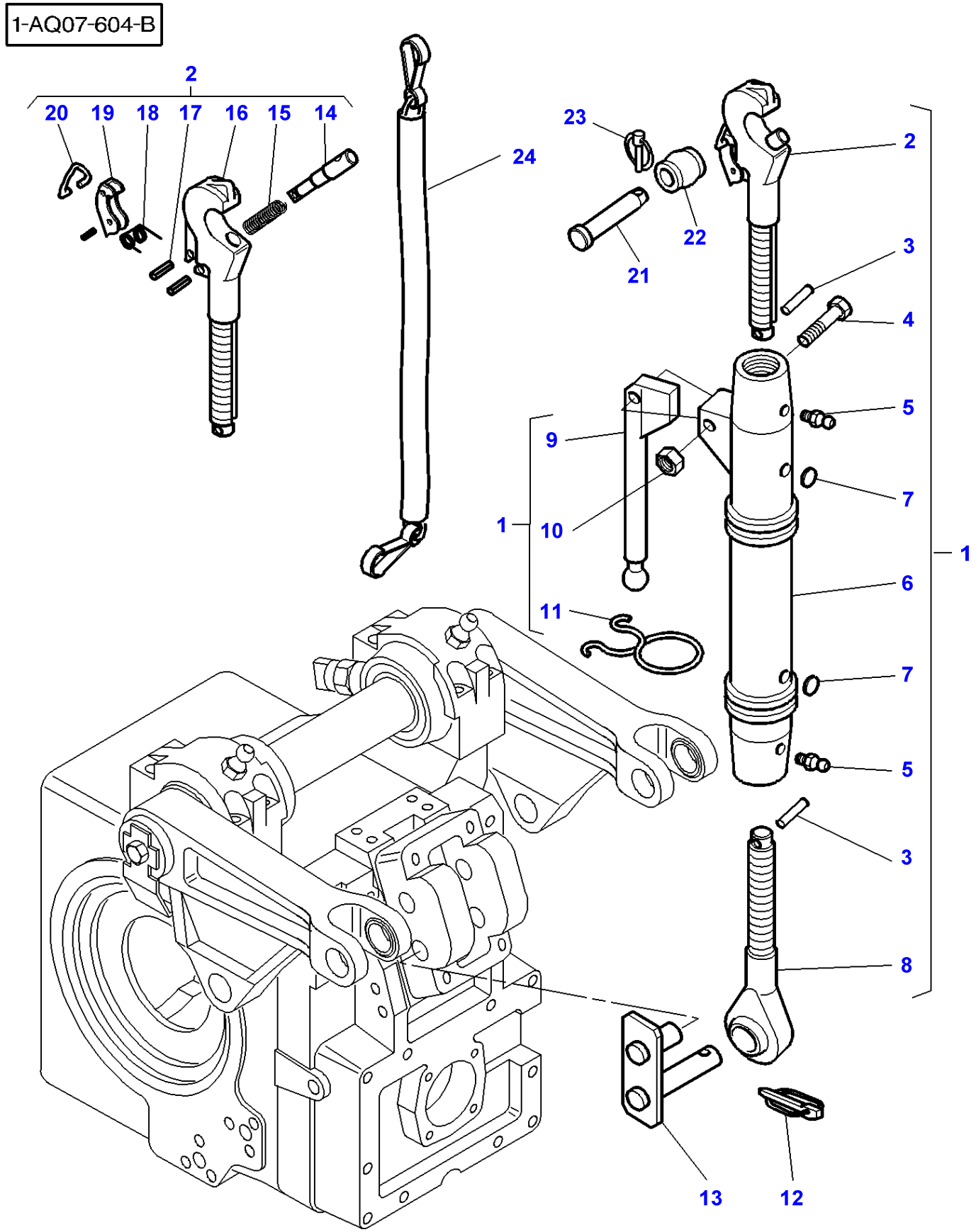
1-AQ07-604-B
2
20
19
18
17
16
15
14
24
23
22
21
2
3
4
5
9
7
1
10
1
6
11
7
5
3
8
13
12

| Item | Part Number | Qty | Description | Comments |
|---|---|---|---|---|
| 1 | 3716607M1 | 1 | Top Link | |
| 2 | 3902908M91 | 1 | Hook | (1) |
| 3 | 3902853M1 | 2 | Clevis Pin | (1) |
| 4 | 339679X1 | 1 | Bolt Metric | (1) |
| 5 | 3902857M1 | 2 | Greaser | (1) |
| 6 | 3902852M1 | 1 | Tube | (1) |
| 7 | 3902858M1 | 2 | Plug | (1) |
| 8 | 3902851M1 | 1 | Toggle | (1) |
| 9 | 3902855M1 | 1 | Lever | (1) |
| 10 | 1440329X1 | 1 | Locknut | (1) |
| 11 | 3902854M1 | 1 | Retainer | (1) |
| 12 | 3387161M2 | 1 | Pin | |
| 13 | 3716129M3 | 1 | Clevis Pin | |
| 14 | 3101927M1 | 1 | Clevis Pin | (2) |
| 15 | 3101929M1 | 1 | Spring | (2) |
| 16 | | 1 | Hook | (2) Not serviced,order REF.2 |
| 17 | 339662X1 | 3 | Pin | (2) |
| 18 | 3101930M1 | 1 | Spring | (2) |
| 19 | 3902909M1 | 1 | Lever | (2) |
| 20 | 3101935M1 | 1 | Tie | (2) |
| 21 | 367073X1 | 1 | Clevis Pin | 31,75 X 130,2MM |
| | 3582043M2 | 1 | Clevis Pin | 25,4 X 124MM |
| 22 | 3042434M1 | 1 | Toggle | CAT.3 |
| | **3042433M1** | 1 | Toggle | CAT.2/3 |
| 23 | 3387161M2 | 1 | Pin | |
| 24 | 3619220M1 | 1 | Chain | Length 1500MM |

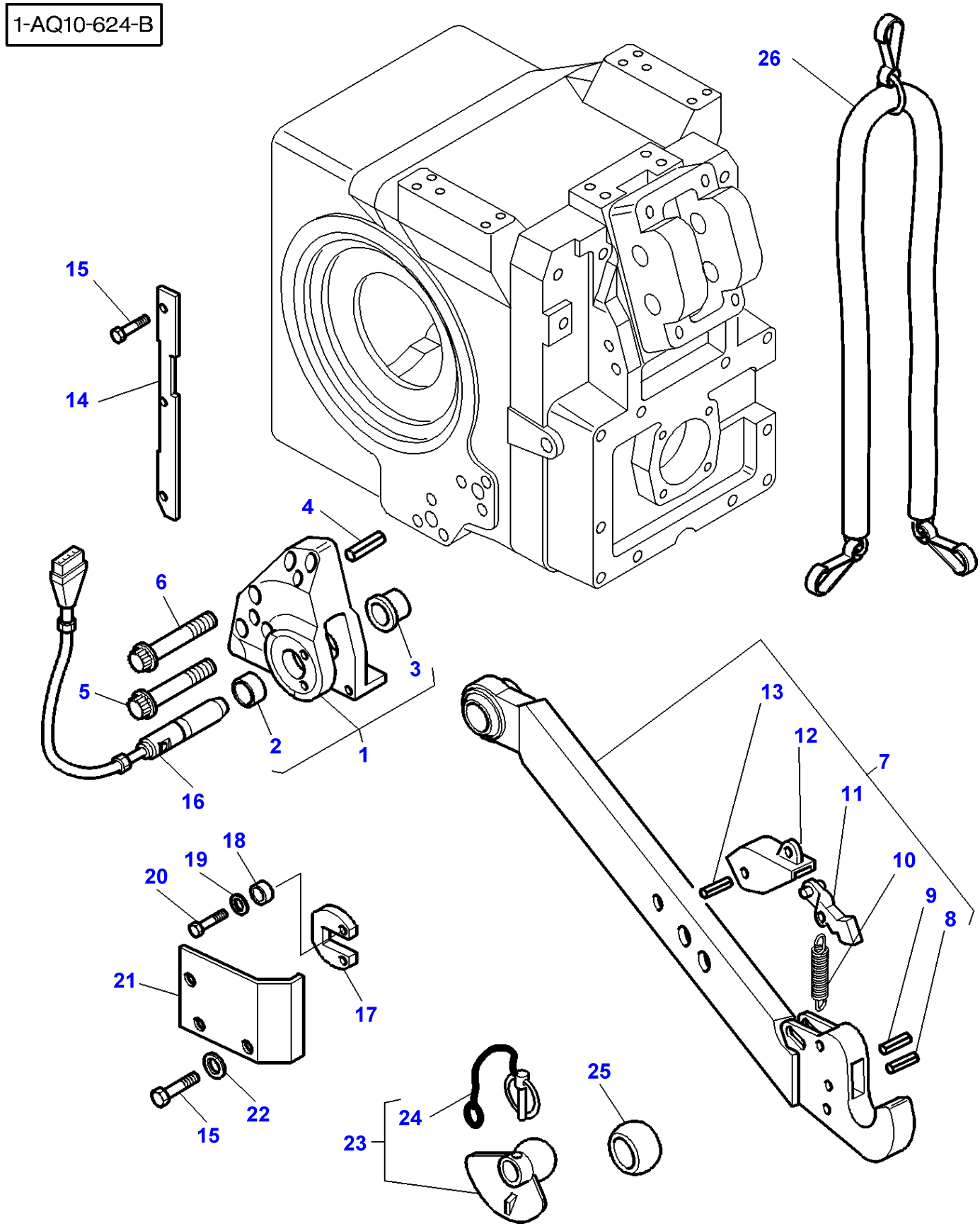
1-AQ10-624-B
26
15
14
4
6
5
3
2
1
16
13
12
7
11
10
9
8
18
19
20
21
17
22
15
24
23
25

| Item | Part Number | Qty | Description | Comments |
|---|---|---|---|---|
| 1 | 3716998M14 | 1 | Clevis | Right Hand |
| | 3716997M14 | 1 | Clevis | Left Hand |
| 2 | 3716994M2 | 1 | Bush | (1) |
| 3 | 3716995M2 | 1 | Bush | (1) |
| 4 | 3716624M1 | 4 | Centraliser | |
| 5 | 3010434X1 | 10 | Screw Metric | M20x80 |
| 6 | 3010558X1 | 2 | Screw Metric | M20x120 |
| 7 | 3716604M1 | 1 | Bar | Left Hand |
| | 3716605M1 | 1 | Bar | Right Hand |
| 8 | 339783X1 | 1 | Pin | (7) Diameter 6X32MM |
| 9 | 3008317X1 | 1 | Pin | (7) |
| 10 | 3101934M1 | 1 | Spring | (7) |
| 11 | 3106461M1 | 1 | Ratchet | (7) |
| 12 | 3103830M1 | 1 | Lever | (7) |
| 13 | 339290X1 | 1 | Pin | (7) |
| 14 | 3791193M1 | 2 | Cowl | |
| 15 | 339124X1 | 12 | Hex. Sock. Screw | M8X16 |
| 16 | **3716981M1** | 2 | Inductive Taker | |
| 17 | 3716499M1 | 2 | Plate | |
| 18 | 3384183M2 | 4 | Bush | |
| 19 | 385362X1 | 4 | Washer | |
| 20 | 3001429X1 | 4 | Screw | M10X35 |
| 21 | 3716983M3 | 1 | Protector | Left Hand |
| | 3716984M3 | 1 | Protector | Right Hand |
| 22 | 390972X1 | 6 | Washer Metric | |
| 23 | **3042427M1** | 1 | Toggle | CAT. 2/3 |
| | **3042428M1** | 1 | Toggle | CAT. 3 |
| 24 | 3102086M91 | 1 | Linch Pin | (23) |
| 25 | **3042430M1** | 1 | Toggle | CAT. 2/3 |
| | **3042431M1** | 1 | Toggle | CAT.3 |
| 26 | 3619219M1 | 1 | Chain | Length 3700MM |

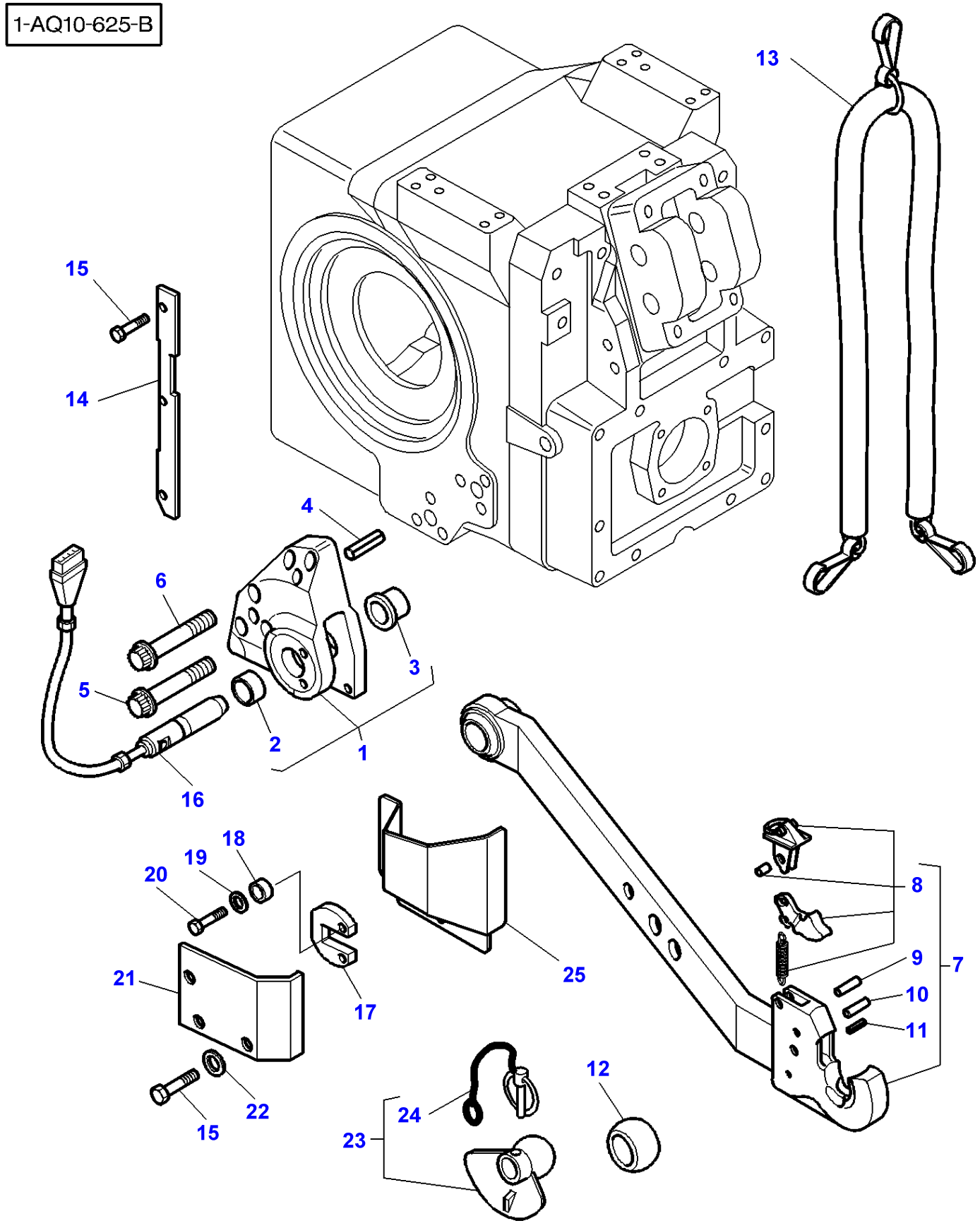
1-AQ10-625-B
13
15
14
4
6
5
3
2
1
16
18
19
20
21
17
22
15
25
8
9
10
11
7
12
24
23

| Item | Part Number | Qty | Description | Comments |
|---|---|---|---|---|
| 1 | 3716998M14 | 1 | Clevis | Right Hand<br>Up to Serial or Engine Number H180022 |
| | 3791868M11 | 1 | Clevis | Right Hand<br>From Serial or Engine Number H180023 |
| | 3716997M14 | 1 | Clevis | Left Hand<br>Up to Serial or Engine Number H180022 |
| | 3791867M11 | 1 | Clevis | Left Hand<br>From Serial or Engine Number H180023 |
| 2 | 3716994M2 | 1 | Bush | (1) |
| 3 | 3716995M2 | 1 | Bush | (1) |
| 4 | 3716624M1 | 4 | Centraliser | |
| 5 | 3010434X1 | 10 | Screw Metric | M20x80 |
| 6 | 3010558X1 | 2 | Screw Metric | M20x120 |
| 7 | 3792536M1 | 1 | Bar | Left Hand |
| | 3792535M1 | 1 | Bar | Right Hand |
| 8 | 3903314M91 | 1 | Kit, Repair | (7) |
| 9 | 3006429X1 | 1 | Pin | (7) |
| 10 | 3008317X1 | 1 | Pin | (7) |
| 11 | 339783X1 | 1 | Pin | (7) |
| 12 | **3042430M1** | 1 | Toggle | CAT. 2/3 |
| | **3042431M1** | 1 | Toggle | CAT.3 |
| 13 | 3619219M1 | 1 | Chain | Length 3700MM |
| 14 | 3791193M1 | 2 | Cowl | |
| 15 | 339124X1 | 12 | Hex. Sock. Screw | M8X16 |
| 16 | **3716981M1** | 2 | Inductive Taker | |
| 17 | 3716499M1 | 2 | Plate | |
| 18 | 3384183M2 | 4 | Bush | |
| 19 | 385362X1 | 4 | Washer | |
| 20 | 3001429X1 | 4 | Screw | M10X35 |
| 21 | 3716983M3 | 1 | Protector | Left Hand<br>Up to Serial or Engine Number H180022 |
| | 3716984M3 | 1 | Protector | Right Hand<br>Up to Serial or Engine Number H180022 |
| 22 | 390972X1 | 6 | Washer Metric | |
| 23 | **3042427M1** | 1 | Toggle | CAT. 2/3 |
| | **3042428M1** | 1 | Toggle | CAT. 3 |
| 24 | 3102086M91 | 1 | Linch Pin | (23) |
| 25 | 3791630M1 | 1 | Protector | Left Hand<br>From Serial or Engine Number H180023 |
| | 3791631M1 | 1 | Protector | Right Hand<br>From Serial or Engine Number H180023 |

1-AQ18-607-A

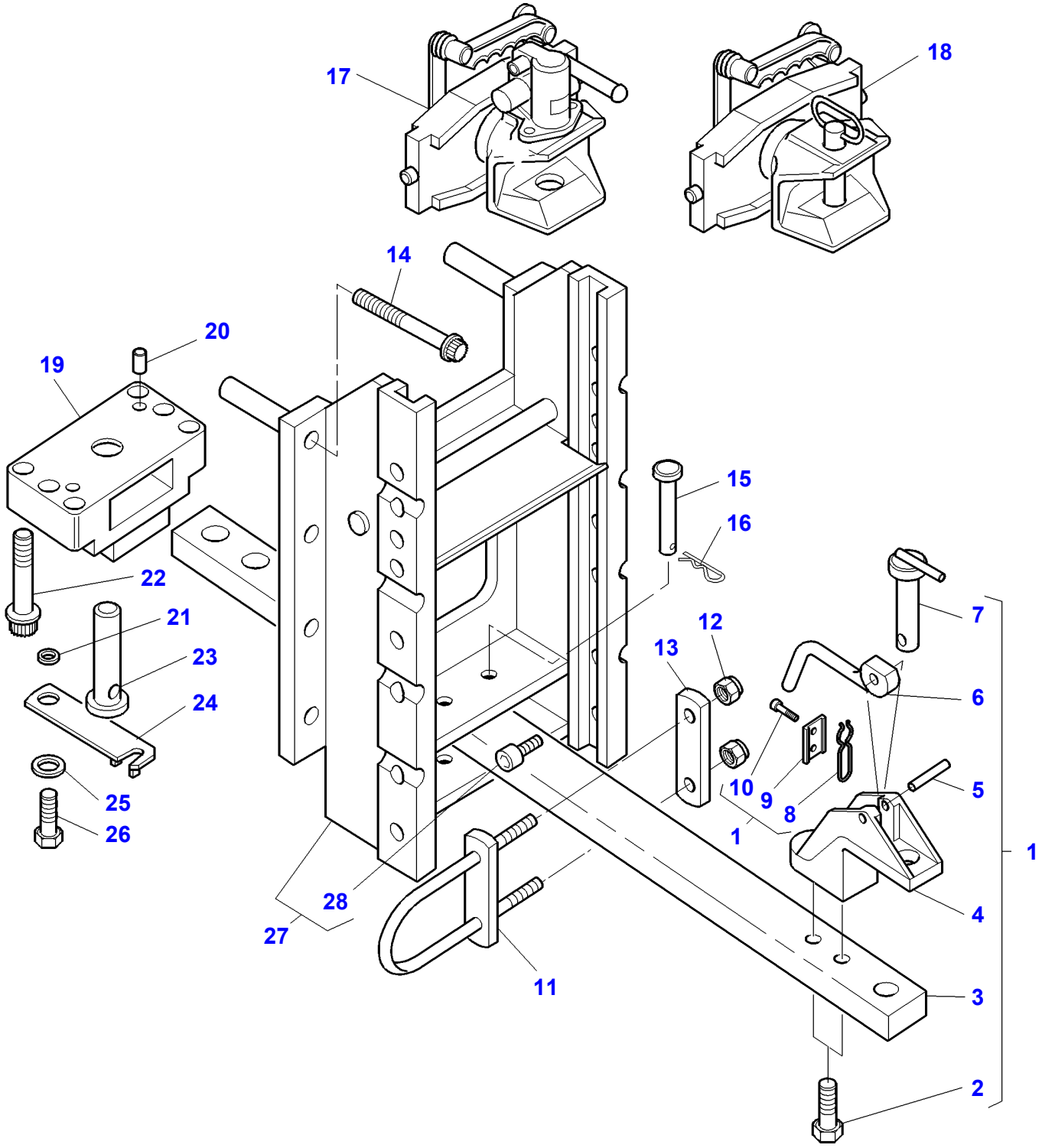

| Item | Part Number | Qty | Description | Comments |
|---|---|---|---|---|
| 1 | 3716631M93 | 1 | Bar | |
| 2 | 1442668X1 | 2 | Screw | (1)<br>M20X80 |
| 3 | | 1 | Bar | (1)<br>Not serviced,order REF.1 |
| 4 | 3716619M2 | 1 | Clevis | (1) |
| 5 | 3010553X1 | 1 | Pin | (1) |
| 6 | 3791643M1 | 1 | Lever | (1) |
| 7 | 3716103M1 | 1 | Pin Hitch | (1) |
| 8 | 3716622M1 | 1 | Thruster | (1) |
| 9 | 3716621M2 | 1 | Plate | (1) |
| 10 | 339560X1 | 2 | Hex. Sock. Screw | (1) |
| 11 | 3716146M1 | 1 | Shackle | |
| 12 | 1442739X1 | 2 | Locknut | |
| 13 | 3716147M1 | 1 | Counterplate | |
| 14 | 3010562X1 | 8 | Screw | M20X230 |
| 15 | 3010560X1 | 2 | Clevis Pin | |
| 16 | 3010932X1 | 2 | Pin | Replace and repair. Old interchangeable with new 3010632X1 |
| 17 | 3791484M1 | 1 | Clevis | See Page - Reference Number 040-0050 |
| 18 | 3791502M1 | 1 | Clevis | See Page - Reference Number 040-0055 |
| 19 | 3716623M3 | 1 | Bearing Carrier | |
| 20 | 3716624M1 | 2 | Centraliser | |
| 21 | 3790749M1 | 1 | Bush | |
| 22 | 3010557X1 | 6 | Screw Metric | M20X100 |
| 23 | 3716121M1 | 1 | Clevis Pin | |
| 24 | 3716306M91 | 1 | Plate | |
| 25 | 385362X1 | 2 | Washer | |
| 26 | 3009492X1 | 2 | Hex. Sock. Screw | M10X25 |
| 27 | 3791483M1 | 1 | Support | |
| 28 | 339114X1 | 1 | Screw Metric | (27)<br>M12X25 |

1-AQ18-608-B

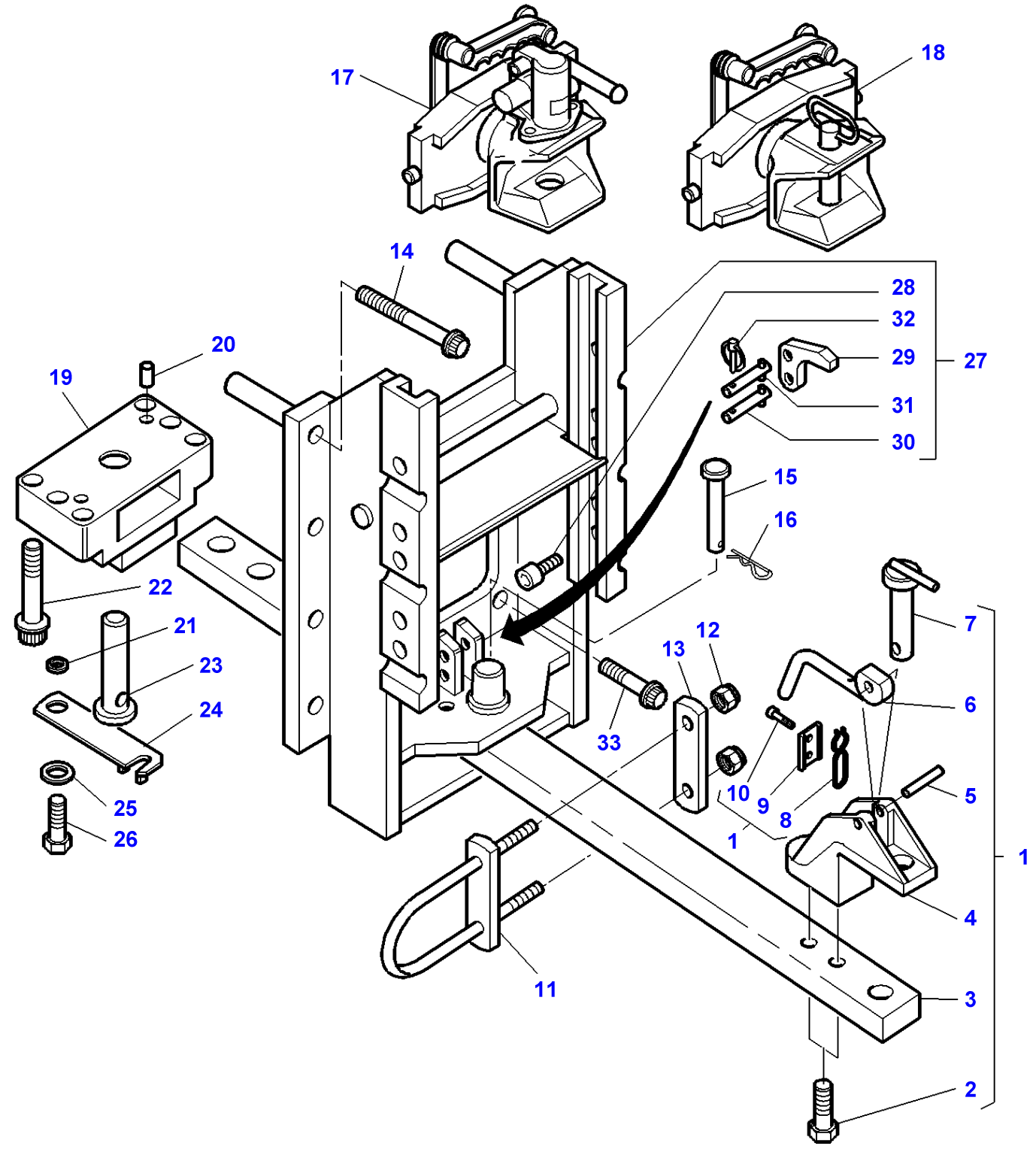
17
18
14
28
32
29
27
31
30
20
19
15
16
22
21
23
24
12
13
7
6
33
10
9
8
5
1
25
26
11
4
3
2
1

| Item | Part Number | Qty | Description | Comments |
|---|---|---|---|---|
| 1 | 3716631M93 | 1 | Bar | |
| 2 | 1442668X1 | 2 | Screw | (1)<br>M20X80 |
| 3 | | 1 | Bar | (1)<br>Not serviced,order REF.1 |
| 4 | 3716619M2 | 1 | Clevis | (1) |
| 5 | 3010553X1 | 1 | Pin | (1) |
| 6 | 3791643M1 | 1 | Lever | (1) |
| 7 | 3716103M1 | 1 | Pin Hitch | (1) |
| 8 | 3716622M1 | 1 | Thruster | (1) |
| 9 | 3716621M2 | 1 | Plate | (1) |
| 10 | 339560X1 | 2 | Hex. Sock. Screw | (1) |
| 11 | 3716146M1 | 1 | Shackle | |
| 12 | 1442739X1 | 2 | Locknut | |
| 13 | 3716147M1 | 1 | Counterplate | |
| 14 | 3010562X1 | 8 | Screw | M20X230 |
| 15 | 3010560X1 | 2 | Clevis Pin | |
| 16 | 3010932X1 | 2 | Pin | Replace and repair. Old interchangeable with new 3010632X1 |
| 17 | 3791484M1 | 1 | Clevis | See Page - Reference Number 040-0050 |
| 18 | 3791502M1 | 1 | Clevis | See Page - Reference Number 040-0055 |
| 19 | 3716623M3 | 1 | Bearing Carrier | |
| 20 | 3716624M1 | 2 | Centraliser | |
| 21 | 3790749M1 | 1 | Bush | |
| 22 | 3010557X1 | 6 | Screw Metric | M20X100 |
| 23 | 3716121M1 | 1 | Clevis Pin | |
| 24 | 3716306M91 | 1 | Plate | |
| 25 | 385362X1 | 2 | Washer | |
| 26 | 3009492X1 | 2 | Hex. Sock. Screw | M10X25 |
| 27 | 3791493M1 | 1 | Support | |
| 28 | 339114X1 | 1 | Screw Metric | (27)<br>M12X25 |
| 29 | 3903017M1 | 1 | Hook | (27) |
| 30 | 3714804M1 | 1 | Clevis Pin | (27) |
| 31 | 3714805M1 | 1 | Clevis Pin | (27) |
| 32 | 3382825M1 | 1 | Pin | (27) |
| 33 | 3010777X1 | 2 | Screw Metric | M20X210 |

1-AQ18-609-A

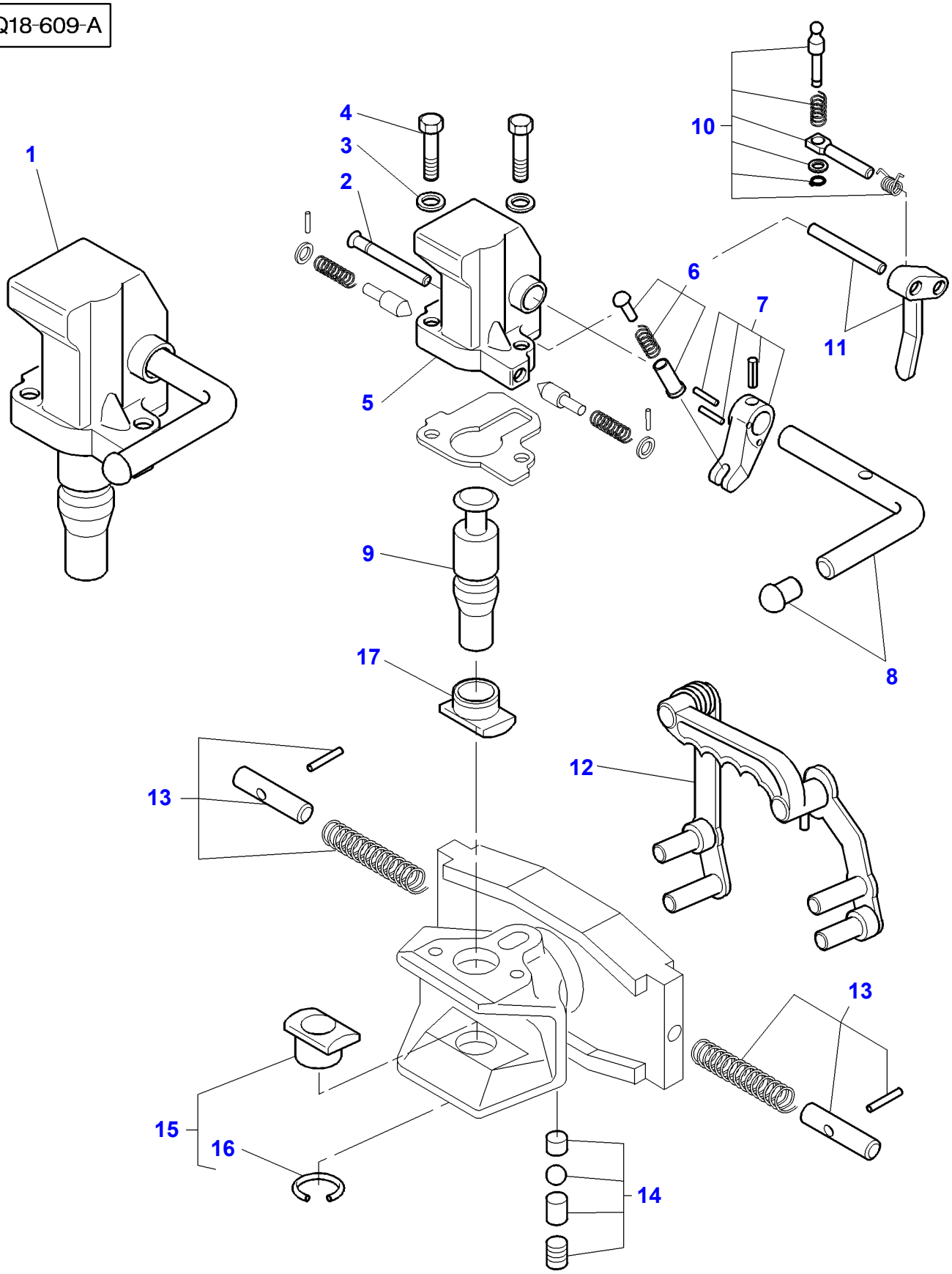

| Item | Part Number | Qty | Description | Comments |
|---|---|---|---|---|
| 1 | 3902974M91 | 1 | Head | |
| 2 | 3902982M1 | 1 | Clevis Pin | (1) |
| 3 | 390734X1 | 2 | Washer | (1) |
| 4 | 339246X1 | 2 | Bolt Metric | (1) |
| 5 | | 1 | Head | (1) Not serviced,order REF. NO 1 |
| 6 | 3902979M91 | 1 | Clevis Pin | (1) |
| 7 | 3902978M91 | 1 | Cam | (1) |
| 8 | 3902977M91 | 1 | Lever | (1) |
| 9 | 3902981M91 | 1 | Clevis Pin | (1) |
| 10 | 3902976M91 | 1 | Clevis Pin | (1) |
| 11 | 3902975M91 | 1 | Lever | (1) |
| 12 | 3107940M92 | 1 | Linkage | |
| 13 | 3107941M91 | 2 | Kit, Rod | |
| 14 | 3105953M91 | 1 | Kit, Brake | |
| 15 | 3902983M91 | 1 | Sleeve | |
| 16 | 395520X1 | 1 | Circlip | (15) |
| 17 | 3902980M91 | 1 | Sleeve | |

1-AQ18-610-A

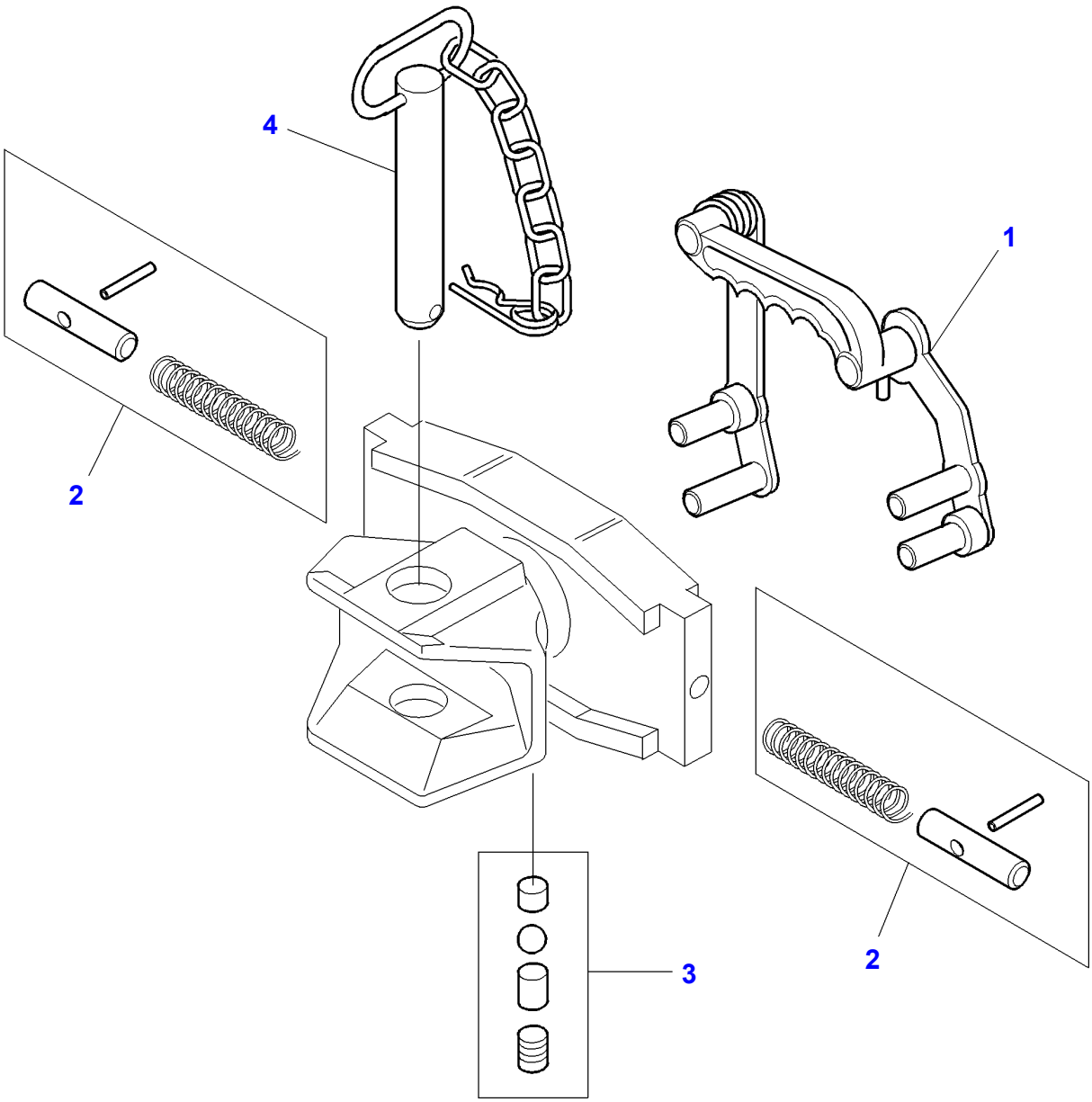

| Item | Part Number | Qty | Description |
|---|---|---|---|
| 1 | 3107940M92 | 1 | Linkage |
| 2 | 3107941M91 | 2 | Kit, Rod |
| 3 | 3105953M91 | 1 | Kit, Brake |
| 4 | 3902984M91 | 1 | Pin Hitch |

1-AQ16-605-A

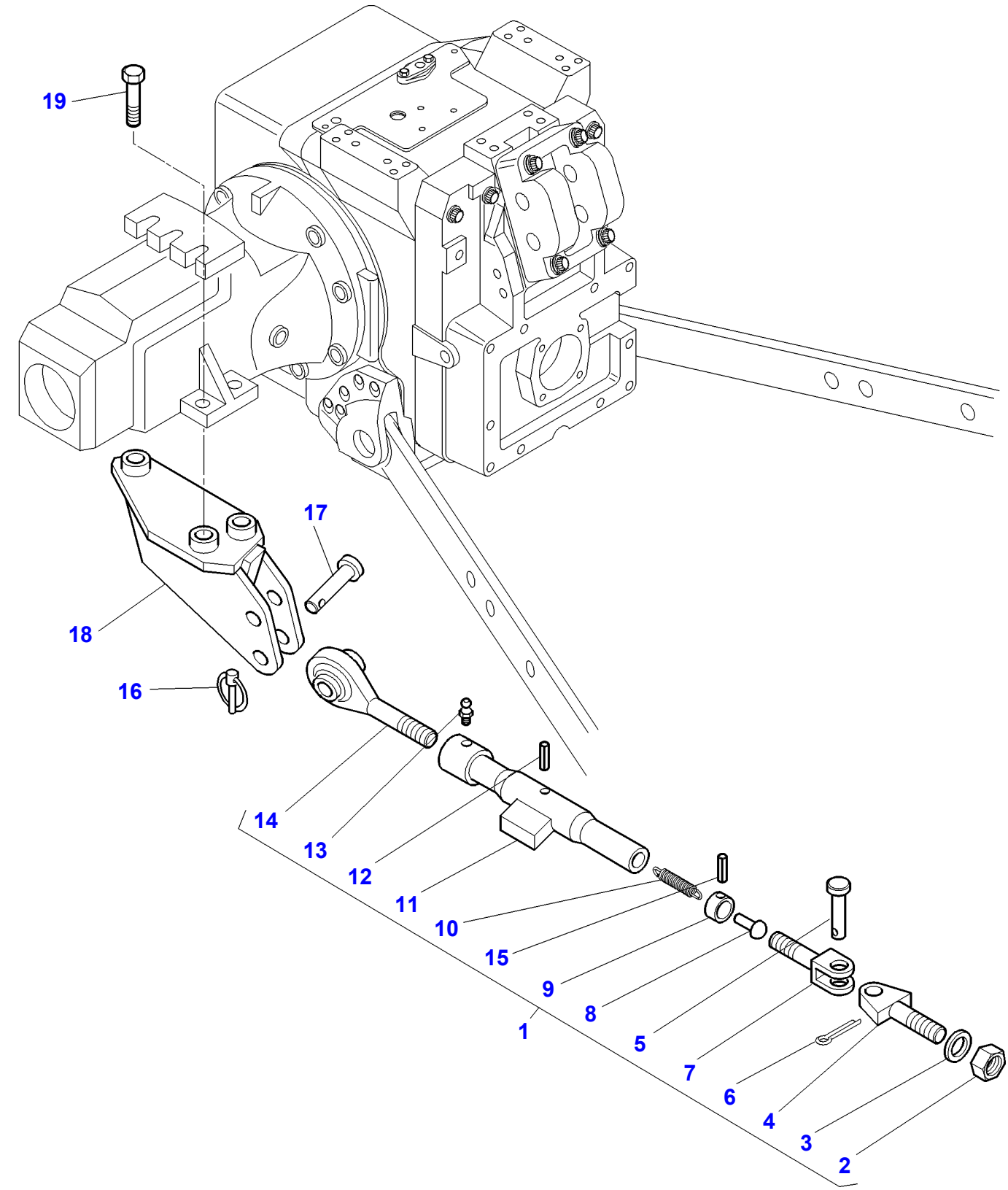

| Item | Part Number | Qty | Description | Comments |
|---|---|---|---|---|
| 1 | 3716775M1 | 2 | Stabiliser | |
| 2 | 3902877M1 | 1 | Nut | (1) |
| 3 | 3902879M1 | 1 | Washer | (1) |
| 4 | 3902875M1 | 1 | Journal | (1) |
| 5 | 3902876M1 | 1 | Clevis Pin | (1) |
| 6 | 354068X1 | 1 | Pin | (1) |
| 7 | 3902872M1 | 1 | Clevis | (1) |
| 8 | 3902873M1 | 1 | Clevis Pin | (1) |
| 9 | 3902874M1 | 1 | Bush | (1) |
| 10 | 3902871M1 | 1 | Spring | (1) |
| 11 | 3902870M1 | 1 | Tube | (1) |
| 12 | 390383X1 | 1 | Pin | (1) |
| 13 | 3900862M1 | 1 | Greaser | (1) |
| 14 | 3902878M1 | 1 | Toggle | (1) |
| 15 | 339304X1 | 1 | Pin | (1) |
| 16 | 3792034M1 | 2 | Pin | |
| 17 | 3582043M2 | 2 | Clevis Pin | |
| 18 | 3716126M1 | 1 | Support | Left Hand |
| | 3716127M1 | 1 | Support | Right Hand |
| 19 | 3010047X1 | 2 | Screw | M20X60 |
| | 3010562X1 | 4 | Screw | M20X230 |

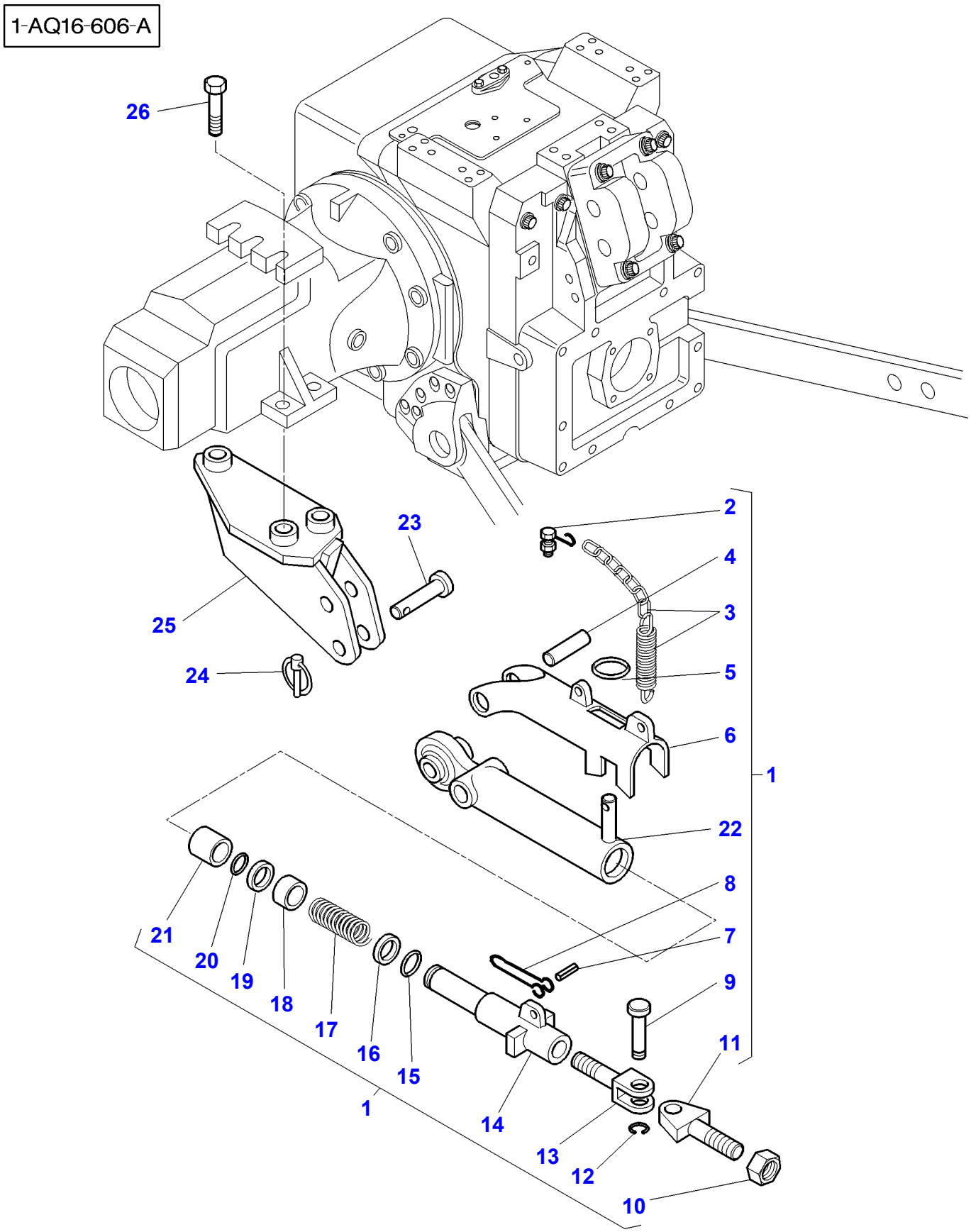
1-AQ16-606-A
26
23
25
24
2
4
3
5
6
1
22
8
7
9
11
21
20
19
18
17
16
15
1
14
13
12
10

| Item | Part Number | Qty | Description | Comments |
|---|---|---|---|---|
| 1 | 3716608M1 | 2 | Stabiliser | |
| 2 | 3902906M1 | 1 | Retainer | (1) |
| 3 | 3902905M91 | 1 | Parts Pack | (1) |
| 4 | 3902891M1 | 1 | Pin | (1) |
| 5 | 3902890M1 | 1 | Ring | (1) |
| 6 | 3902889M1 | 1 | Latch | (1) |
| 7 | 3000046X1 | 1 | Pin | (1) |
| 8 | 3902899M1 | 1 | Handle | (1) |
| 9 | 3902901M1 | 1 | Screw | (1) |
| 10 | 3902904M1 | 1 | Nut | (1) |
| 11 | 3902903M1 | 1 | Journal | (1) |
| 12 | 3902902M1 | 1 | Clip | (1) |
| 13 | 3902900M1 | 1 | Clevis | (1) |
| 14 | 3902898M1 | 1 | Tube | (1) |
| 15 | 3902897M1 | 1 | Clip | (1) |
| 16 | 3902894M1 | 1 | Bush | (1) |
| 17 | 3902896M1 | 1 | Spring | (1) |
| 18 | 3902895M1 | 1 | Bush | (1) |
| 19 | 3902894M1 | 1 | Bush | (1) |
| 20 | 3902893M1 | 1 | Clip | (1) |
| 21 | 3902892M1 | 1 | Bush | (1) |
| 22 | 3902888M1 | 1 | Toggle | (1) |
| 23 | 3582043M2 | 2 | Clevis Pin | |
| 24 | 3792034M1 | 2 | Pin | |
| 25 | 3716126M1 | 1 | Support | Left Hand |
| | 3716127M1 | 1 | Support | Right Hand |
| 26 | 3010047X1 | 2 | Screw | M20X60 |
| | 3010562X1 | 4 | Screw | M20X230 |

| Page Title | Page Number |
|---|---|
| Pto Shaft | 050-0005 |
| Independant Power Take Off Clutch - 7 Disc | 050-0010 |
| Independant Power Take Off Drive Mechanism - Two Speed - Brakes | 050-0015 |
| Independant Power Take Off Clutch | 050-0020 |
| Pto Shaft | 050-0025 |
| Pto Shaft - Cable Control | 050-0030 |
| Pto Shaft | 050-0035 |
| Pto-Coupling Drive Mechanism - PTO CONTROL 750/1000 RPM | 050-0040 |
| Pto-Proportional Drive Mechanism - Cable Control | 050-0045 |

1-AX18-604-A

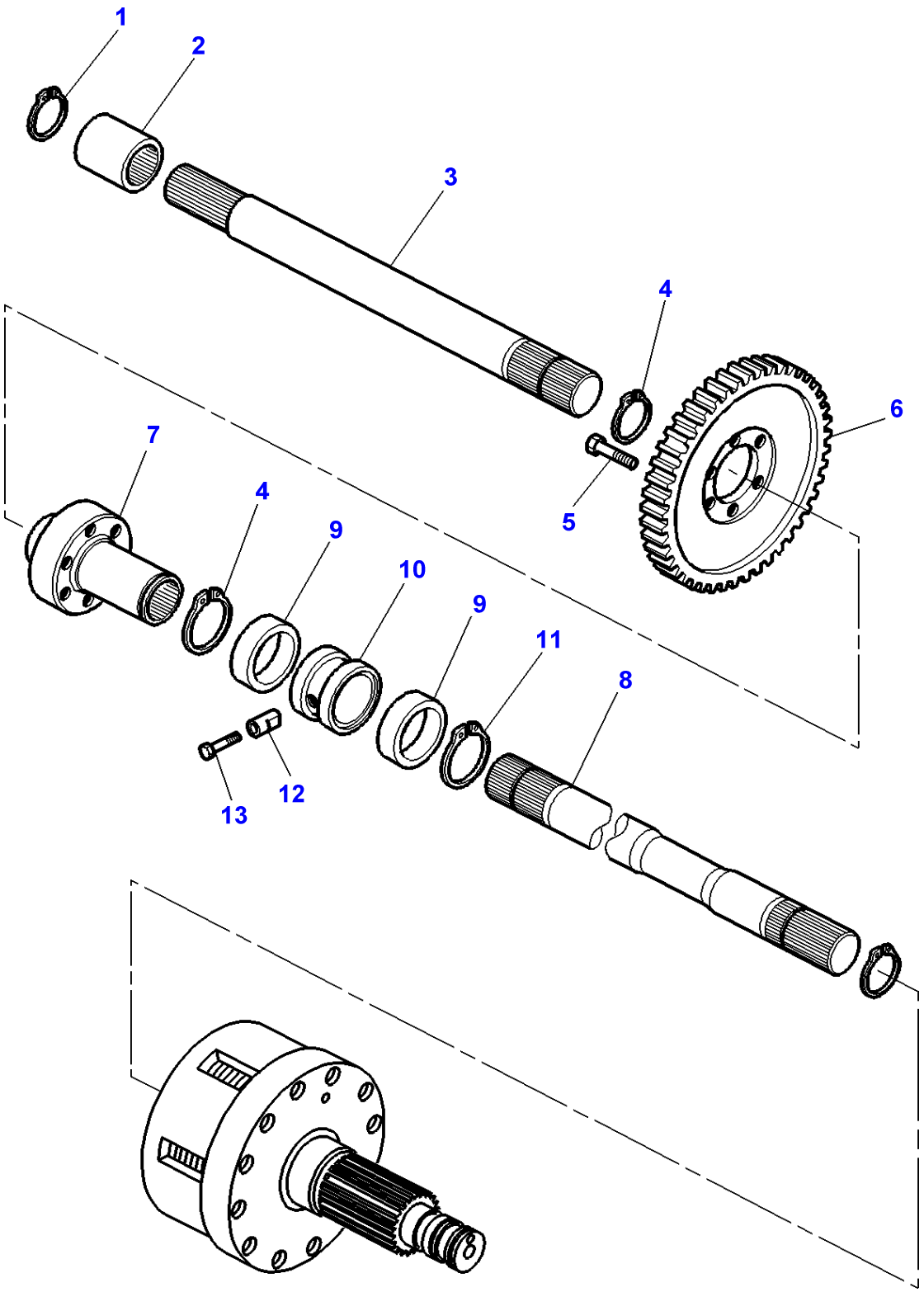

| Item | Part Number | Qty | Description | Comments |
|---|---|---|---|---|
| 1 | 3019268X1 | 1 | Circlip | |
| 2 | 3716460M1 | 1 | Sleeve | |
| 3 | 3716417M1 | 1 | Shaft | Length 370MM |
| 4 | 339469X1 | 2 | Circlip | |
| 5 | 339081X1 | 6 | Screw Metric | M10X20 |
| 6 | 3716420M1 | 1 | Pinion | Number of teeth/spines 87 |
| 7 | 3716489M1 | 1 | Hub | |
| 8 | 3716421M2 | 1 | Shaft | |
| 9 | 3003277X1 | 2 | Bear. 6010 | |
| 10 | 3716564M2 | 1 | Bush | |
| 11 | 391129X1 | 1 | Circlip | |
| 12 | 3716807M1 | 1 | Pin | |
| 13 | 3019642X1 | 1 | Plug | M16 |

1-AG23-615-A

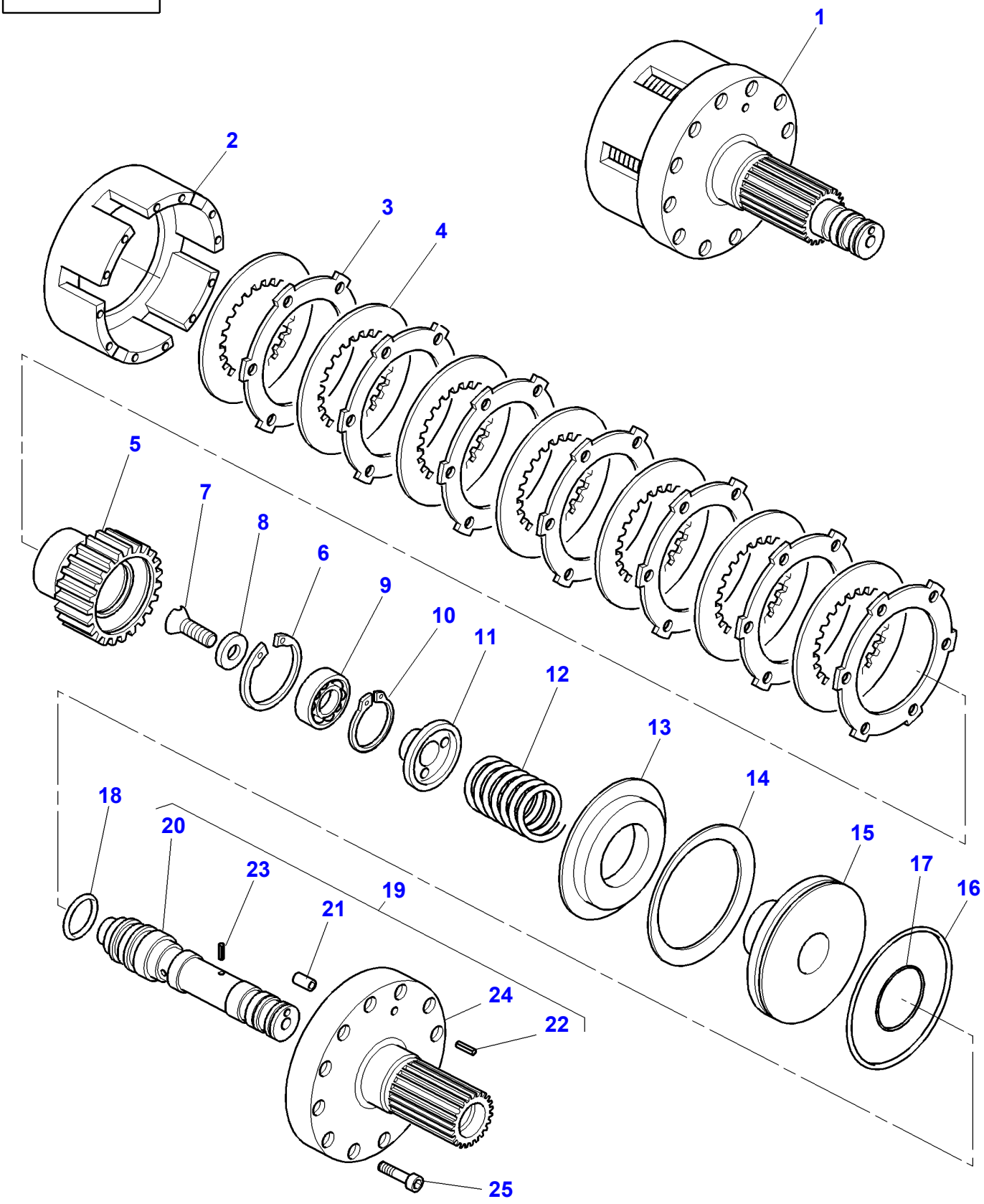

| Item | Part Number | Qty | Description | Comments |
|---|---|---|---|---|
| 1 | 3716008M14 | 1 | Kit, Clutch | |
| 2 | 3716032M1 | 1 | Cover | (1) |
| 3 | 3387347M1 | 7 | Disc | (1) |
| 4 | 3387346M1 | 7 | Counterplate | (1) |
| 5 | 3716033M1 | 1 | Hub | (1) |
| 6 | 3716080M1 | 1 | Ring | (1) |
| 7 | 3009450X1 | 1 | Screw | (1)<br>M10X20 |
| 8 | 3389211M1 | 1 | Washer | (1) |
| 9 | 3010767X1 | 1 | Bear. 6004 | (1) |
| 10 | 391061X1 | 1 | Circlip | (1) |
| 11 | 3716034M1 | 1 | Stop | (1) |
| 12 | 3582893M1 | 1 | Spring | (1) |
| 13 | 3387198M1 | 1 | Support | (1) |
| 14 | 3619148M1 | 1 | Cup Spring | (1) |
| 15 | 3387193M1 | 1 | Piston | (1) |
| 16 | 3582933M1 | 1 | O Ring | (1) |
| 17 | 3582934M1 | 1 | Gasket | (1)<br>Diameter 29,74X3,53MM |
| 18 | 367156X1 | 1 | O Ring | (1)<br>Diameter 26,64X2,62MM |
| 19 | 3716061M91 | 1 | Support | (1) |
| 20 | 3716030M1 | 1 | Clevis Pin | (19) |
| 21 | 3009351X1 | 1 | Screw | (19)<br>M6x8 |
| 22 | 1872134M92 | 1 | Valve Check | (19) |
| 23 | 3006442X1 | 1 | Pin | (19)<br>Diameter 2 MM<br>Length 12 MM |
| 24 | | 1 | Hub Carrier | (19)<br>Not serviced,order REF 19 |
| 25 | 3010785X1 | 12 | Screw Metric | M8X50 |

1-AG24-603-A

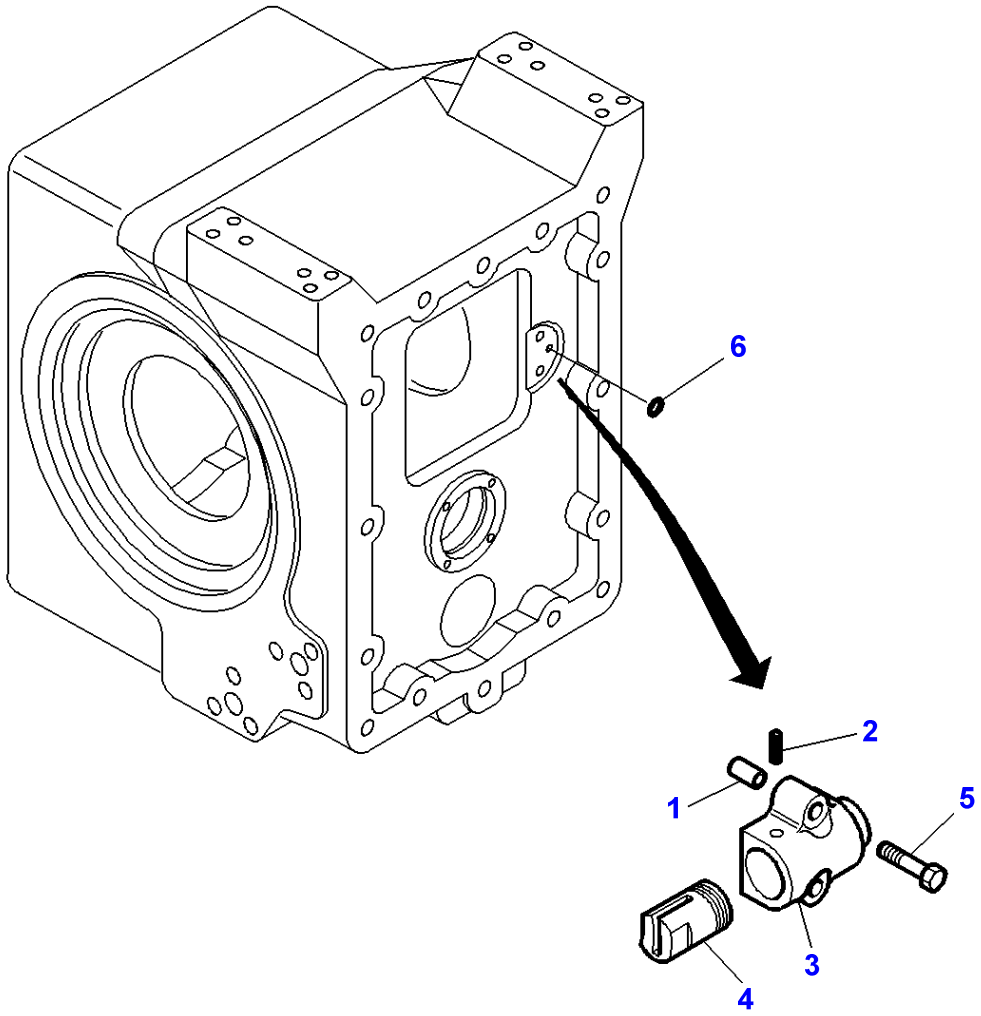

| Item | Part Number | Qty | Description | Comments |
|---|---|---|---|---|
| 1 | 3000052X1 | 2 | Sleeve | |
| 2 | 1440961X1 | 1 | Pin | Diameter 4 MM<br>Length 10 MM |
| 3 | 3716181M1 | 1 | Case Assy | |
| 4 | 3716180M1 | 1 | Piston | |
| 5 | 3004715X1 | 2 | Screw | M8X60 |
| 6 | 1440011X1 | 1 | O Ring | |

1-AG23-613-B

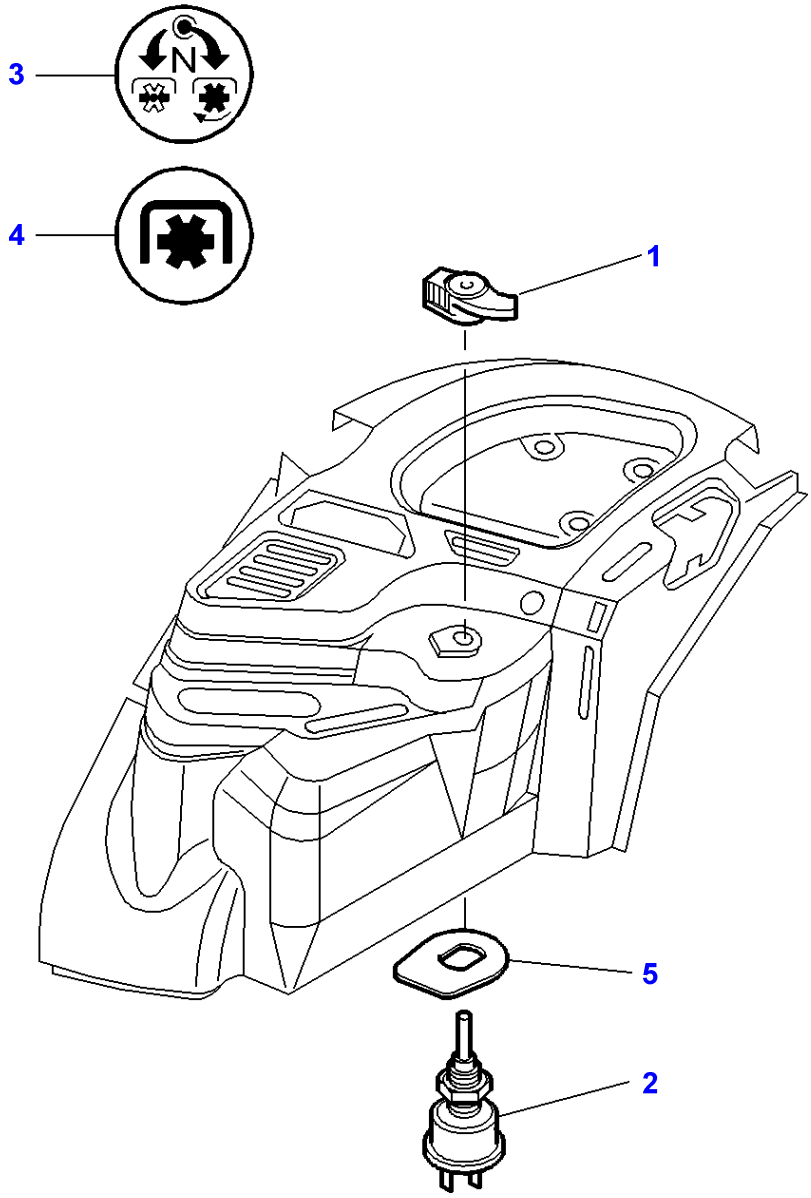

| Item | Part Number | Qty | Description | Comments |
|---|---|---|---|---|
| 1 | 3778562M2 | 1 | Button | |
| 2 | **3619445M1** | 1 | Switch,Indirect | |
| 3 | 3778564M1 | 1 | Decal | [A]<br>Up to Serial or Engine Number G300004 |
| 4 | 3781792M1 | 1 | Decal | [A]<br>From Serial or Engine Number G300005 |
| 5 | 3781924M1 | 1 | Plate | From Serial or Engine Number G300005 |

**FOOTNOTE [A]** WITH PTO BRAKES

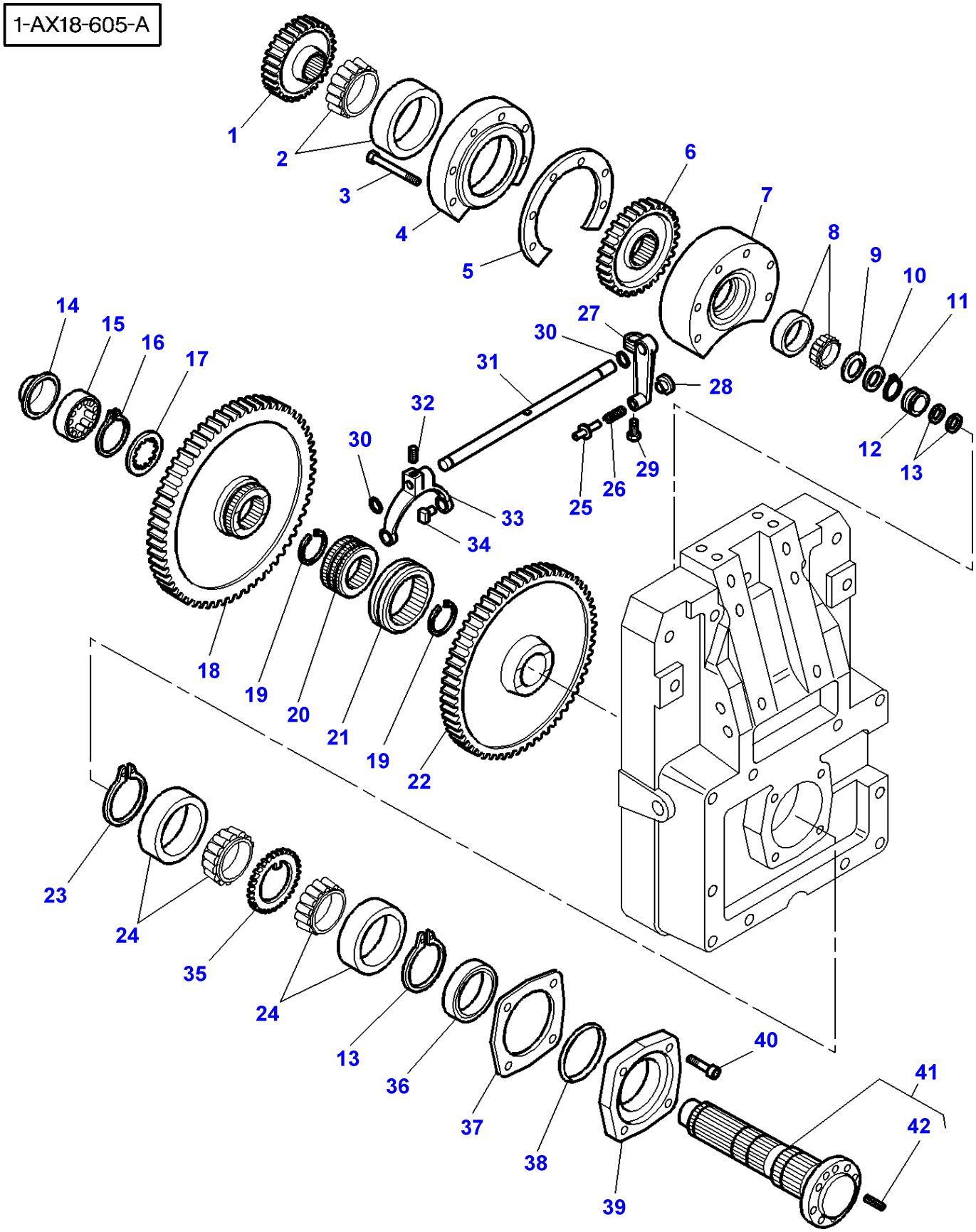
1-AX18-605-A
1
2
3
4
5
6
7
8
9
10
11
12
13
14
15
16
17
18
19
20
21
19
22
23
24
35
24
13
36
37
38
39
40
41
42
25
26
27
28
29
30
31
32
30
33
34

| Item | Part Number | Qty | Description | Comments |
|---|---|---|---|---|
| 1 | 3716005M1 | 1 | Pinion | Number of teeth/spines 37<br>750 RPM |
| 2 | 968634M91 | 1 | Bearing Assy | |
| 3 | 339488X1 | 6 | Bolt Metric | M10x85 |
| 4 | 3716002M2 | 1 | Bearing Carrier | |
| 5 | 3716037M1 | X | Chock | Thickness 0,1 MM |
| | 3716038M1 | X | Chock | Thickness 0,4 MM |
| 6 | 3716006M1 | 1 | Pinion | Number of teeth/spines 44<br>1000 RPM |
| 7 | 3716003M2 | 1 | Case Assy | |
| 8 | 3009853X1 | 1 | Bearing Taper | |
| 9 | 3716007M1 | 1 | Washer | |
| 10 | 3716028M1 | 1 | Washer | |
| 11 | 3010624X1 | 1 | Ring | |
| 12 | 3382868M1 | 1 | Bush | |
| 13 | 3382874M1 | 2 | Segment | |
| 14 | 3716024M1 | 1 | Deflector | |
| 15 | 1612707M1 | 1 | Bearing Assy | |
| 16 | 391129X1 | 1 | Circlip | |
| 17 | 3716027M2 | 1 | Washer | |
| 18 | 3716009M13 | 1 | Pinion | Number of teeth/spines 99<br>750 RPM |
| 19 | 3010555X1 | 2 | Ring | |
| 20 | 3716025M2 | 1 | Hub | |
| 21 | 3382069M2 | 1 | Slider Bearing | |
| 22 | 3716012M12 | 1 | Pinion | Number of teeth/spines 92<br>1000 RPM |
| 23 | 3010554X1 | 2 | Circlip | |
| 24 | 968634M91 | 2 | Bearing Assy | |
| 25 | 3383009M1 | 1 | Clevis Pin | |
| 26 | 1426515M1 | 1 | Spring | |
| 27 | 3581440M1 | 1 | Lever | |
| 28 | 973052M1 | 1 | Knob | |
| 29 | 1440350X1 | 1 | Screw Metric | M6 |
| 30 | 195868M1 | 2 | O Ring | |
| 31 | 3716049M1 | 1 | Stem | |
| 32 | 3382979M1 | 1 | Screw Special | M8x20 |
| 33 | 3382971M1 | 1 | Fork | |
| 34 | 3382972M1 | 2 | Skate | |
| 35 | 3716014M2 | 1 | Spacer | |
| 36 | 3716017M1 | 1 | Gasket | |
| 37 | 3716053M1 | X | Chock | Thickness 0,1 MM |
| | 3716054M1 | X | Chock | Thickness 0,4 MM |
| 38 | 152623M1 | 1 | O Ring | |
| 39 | 3716022M1 | 1 | Hub | |
| 40 | 3009292X1 | 4 | Screw | M10x25 |
| 41 | 3716057M13 | 1 | Shaft | |
| 42 | 3006290X1 | 1 | Centraliser | (41)<br>Diameter 10 MM<br>Length 30 MM |

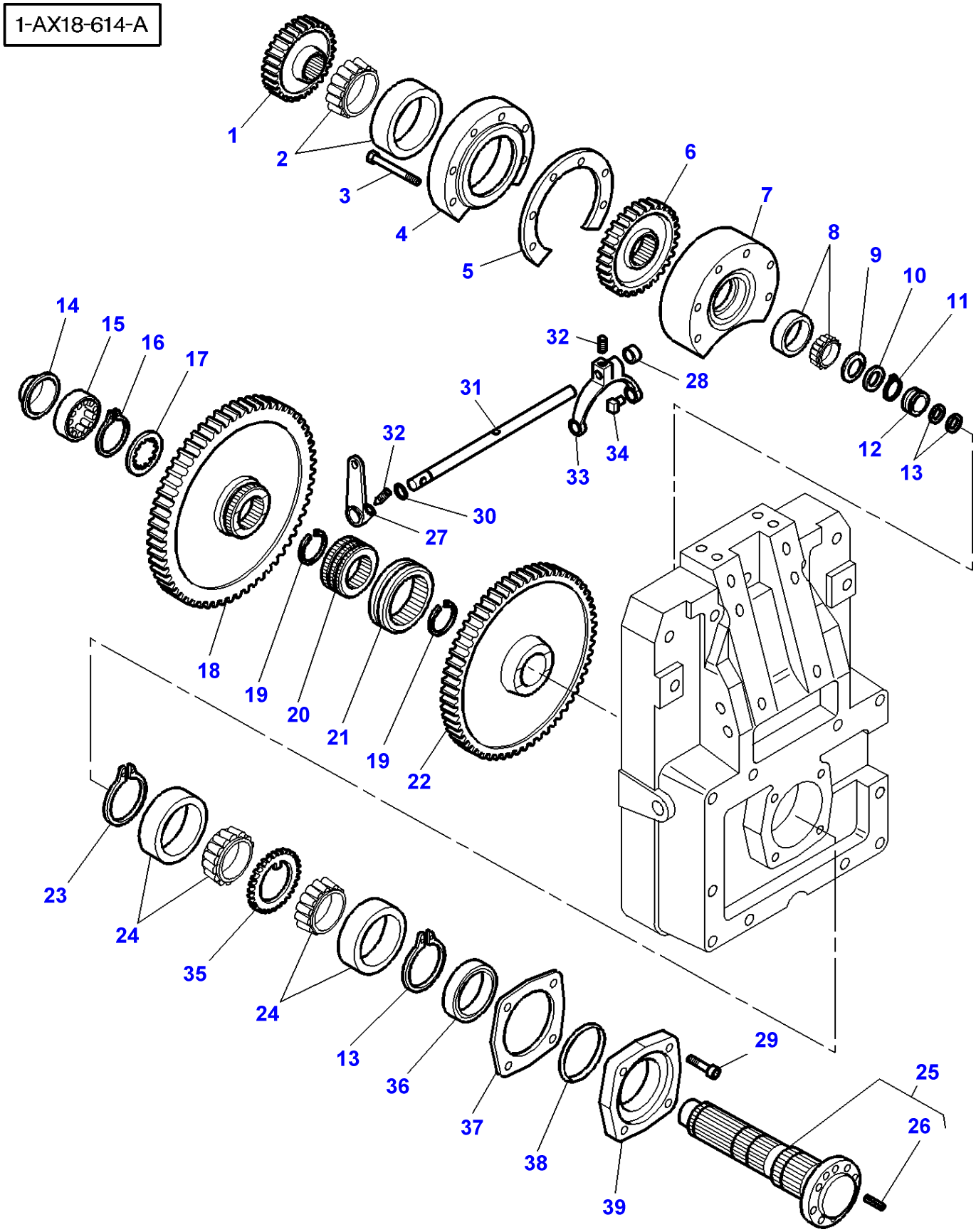
1-AX18-614-A
1
2
3
4
5
6
7
8
9
10
11
12
13
14
15
16
17
18
19
20
21
19
22
23
24
35
24
13
36
37
38
39
29
25
26
27
30
31
32
33
34
32
28

| Item | Part Number | Qty | Description | Comments |
|---|---|---|---|---|
| 1 | 3716288M1 | 1 | Pinion | Number of teeth/spines 29<br>540 RPM |
| | 3716005M1 | 1 | Pinion | Number of teeth/spines 37<br>750 RPM |
| 2 | 968634M91 | 1 | Bearing Assy | |
| 3 | 339488X1 | 6 | Bolt Metric | M10x85 |
| 4 | 3716002M2 | 1 | Bearing Carrier | |
| 5 | 3716037M1 | X | Chock | Thickness 0,1 MM |
| | 3716038M1 | X | Chock | Thickness 0,4 MM |
| 6 | 3716006M1 | 1 | Pinion | Number of teeth/spines 44<br>1000 RPM |
| 7 | 3716003M2 | 1 | Case Assy | |
| 8 | 3009853X1 | 1 | Bearing Taper | |
| 9 | 3716007M1 | 1 | Washer | |
| 10 | 3716028M1 | 1 | Washer | |
| 11 | 3010624X1 | 1 | Ring | |
| 12 | 3382868M1 | 1 | Bush | |
| 13 | 3382874M1 | 2 | Segment | |
| 14 | 3716024M1 | 1 | Deflector | |
| 15 | 1612707M1 | 1 | Bearing Assy | |
| 16 | 391129X1 | 1 | Circlip | |
| 17 | 3716027M2 | 1 | Washer | |
| 18 | 3716290M12 | 1 | Pinion | Number of teeth/spines 107<br>540 RPM |
| | 3716009M13 | 1 | Pinion | Number of teeth/spines 99<br>750 RPM |
| 19 | 3010555X1 | 2 | Ring | |
| 20 | 3716025M2 | 1 | Hub | |
| 21 | 3382069M2 | 1 | Slider Bearing | |
| 22 | 3716012M12 | 1 | Pinion | Number of teeth/spines 92<br>1000 RPM |
| 23 | 3010554X1 | 2 | Circlip | |
| 24 | 968634M91 | 2 | Bearing Assy | |
| 25 | 3716057M13 | 1 | Shaft | |
| 26 | 3006290X1 | 1 | Centraliser | (25)<br>Diameter 10 MM<br>Length 30 MM |
| 27 | 3389580M2 | 1 | Lever | |
| 28 | 391563X1 | 1 | Plug | |
| 29 | 3009292X1 | 4 | Screw | M10x25 |
| 30 | 195868M1 | 1 | O Ring | |
| 31 | 3791859M1 | 1 | Stem | |
| 32 | 3382979M1 | 2 | Screw Special | M8x20 |
| 33 | 3382971M1 | 1 | Fork | |
| 34 | 3382972M1 | 2 | Skate | |
| 35 | 3716014M2 | 1 | Spacer | |
| 36 | 3716017M1 | 1 | Gasket | |
| 37 | 3716053M1 | X | Chock | Thickness 0,1 MM |
| | 3716054M1 | X | Chock | Thickness 0,4 MM |
| 38 | 152623M1 | 1 | O Ring | |
| 39 | 3716022M1 | 1 | Hub | |

1-AX18-613-A

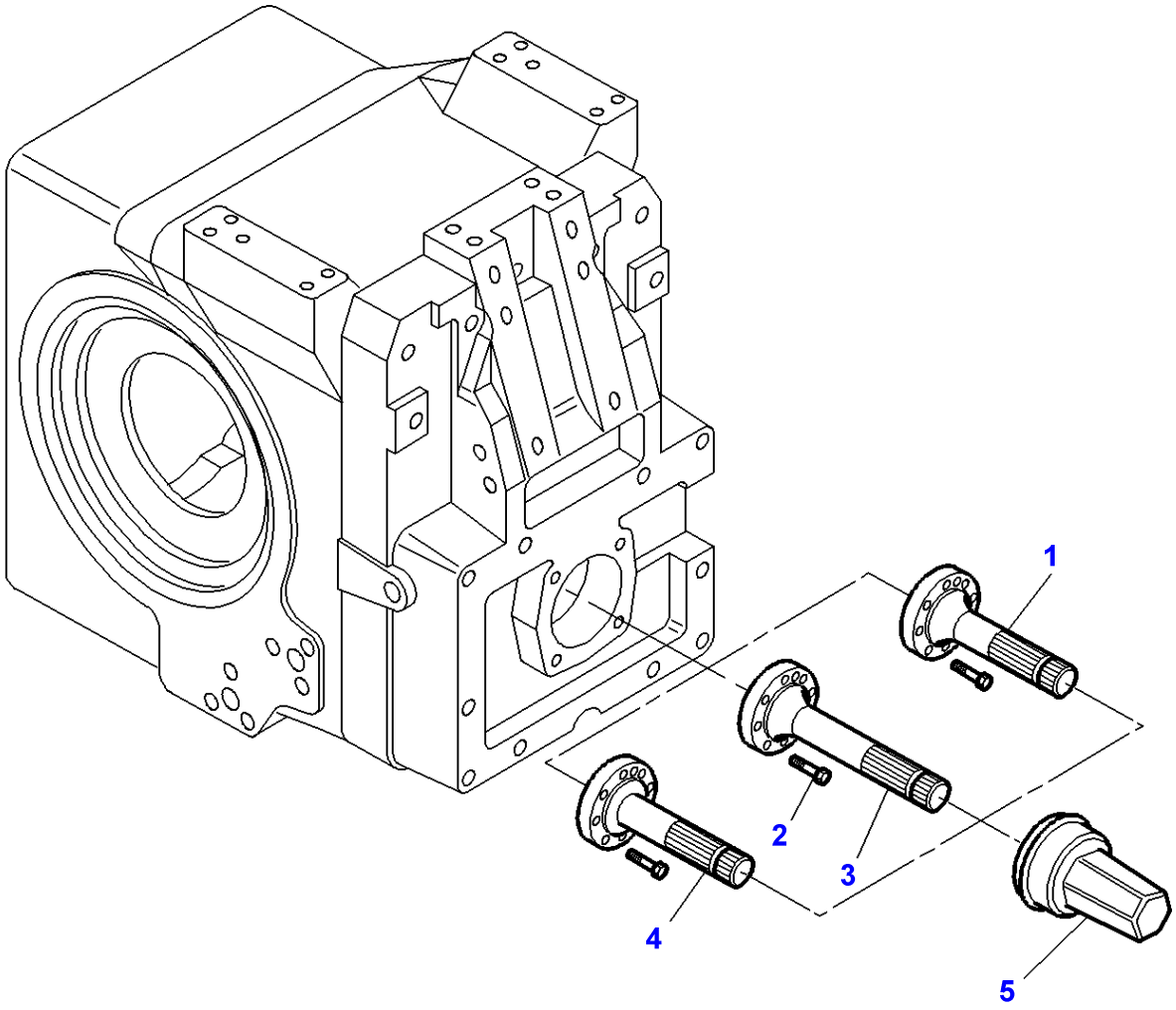

| Item | Part Number | Qty | Description | Comments |
|---|---|---|---|---|
| 1 | 3716016M1 | 1 | Shaft | Number of teeth/spines 21<br>Diameter 1"3/8-34,9 MM<br>Length 137,45 MM<br>1000 RPM |
| 2 | 3010800X1 | 8 | Screw | M12x35 |
| 3 | 3716019M1 | 1 | Shaft | Number of teeth/spines 20<br>Diameter 1"3/4-44,2 MM<br>Length 137,45 MM<br>1000 RPM |
| 4 | 3716018M1 | 1 | Shaft | Number of teeth/spines 6<br>Diameter 1"3/8-34,9 MM<br>Length 177,45 MM<br>540 RPM |
| 5 | 3716021M1 | 1 | Protector | |

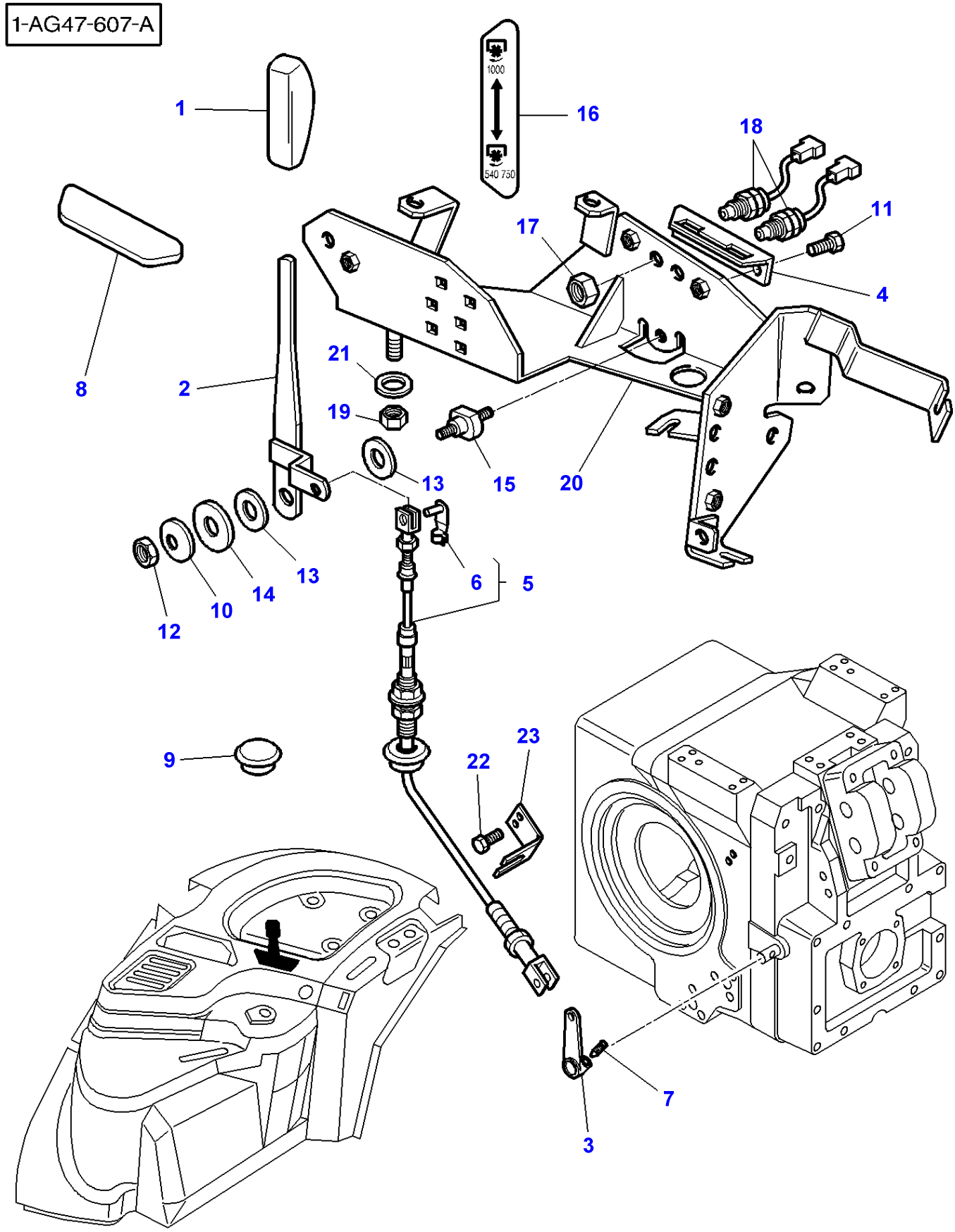
1-AG47-607-A
1000
540 750
1
16
18
11
17
4
8
2
21
19
13
15
20
13
14
10
12
6
5
9
22
23
7
3

| Item | Part Number | Qty | Description | Comments |
|---|---|---|---|---|
| 1 | 3712976M2 | 1 | Handle | [A] |
| | 3777016M1 | 1 | Knob | [B] |
| 2 | 3712282M3 | 1 | Lever | |
| 3 | 3389580M2 | 1 | Lever | M16X50 |
| 4 | 3715489M3 | 1 | Grille | |
| 5 | 3715483M1 | 1 | Cable | |
| 6 | 3600190M1 | 1 | Clevis Pin | (5) Length 28MM |
| | 3600191M1 | 1 | Clevis Pin | (5) Length 40MM |
| 7 | 3382979M1 | 1 | Screw Special | |
| 8 | 3712984M1 | X | Plate | |
| 9 | 3715587M1 | 1 | Decal | Diameter 22MM |
| 10 | 3386192M1 | 1 | Washer | |
| 11 | 339228X1 | 2 | Screw Metric | M8X12 |
| 12 | 1441461X1 | 2 | Locknut | |
| 13 | 3386166M1 | 2 | Washer | |
| 14 | 1442174X1 | 1 | Washer | |
| 15 | 3712277M1 | 1 | Clevis Pin | |
| 16 | 3715185M2 | 1 | Decal | |
| 17 | 3386198M1 | 2 | Nut Special | |
| 18 | **3780581M1** | 2 | Switch,Indirect | |
| 19 | 1441461X1 | 4 | Locknut | |
| 20 | 3778480M91 | 1 | Support | |
| 21 | 385361X1 | 4 | Washer | |
| 22 | 391989X1 | 2 | Screw Metric | M8X20 |
| 23 | 3791860M1 | 1 | Thruster | |

**FOOTNOTE [A]** BLACK
**FOOTNOTE [B]** YELLOW

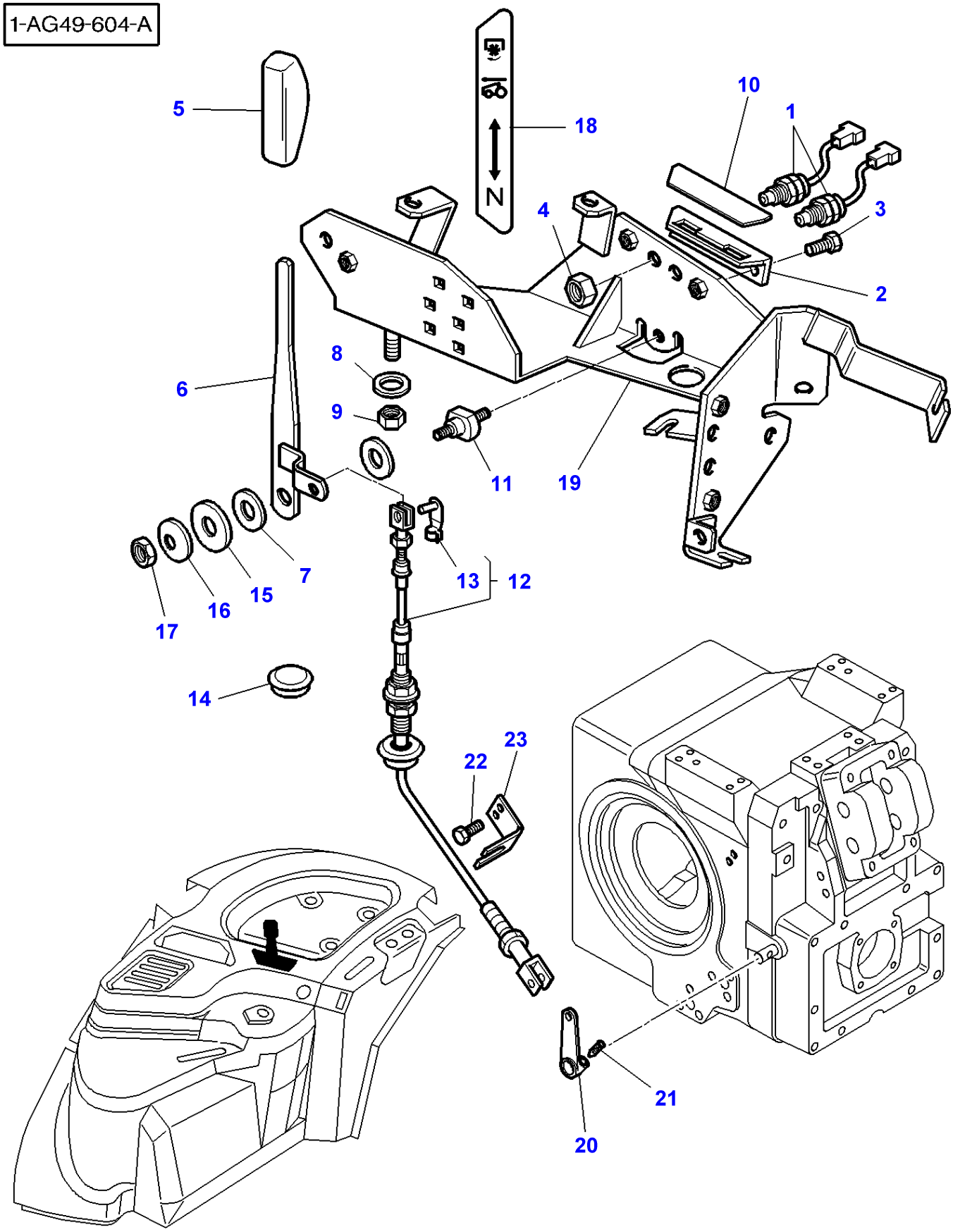
1-AG49-604-A
5
18
N
10
1
3
4
2
8
6
9
11
19
7
15
16
17
13
12
14
23
22
21
20

| Item | Part Number | Qty | Description | Comments |
|---|---|---|---|---|
| 1 | **3780581M1** | 2 | Switch,Indirect | |
| 2 | 3712275M1 | 1 | Grille | |
| 3 | 339228X1 | 2 | Screw Metric | M8X12 |
| 4 | 3386198M1 | 2 | Nut Special | |
| 5 | 3712976M2 | 1 | Handle | [A] |
| | 3777016M1 | 1 | Knob | [B] |
| 6 | 3712282M3 | 1 | Lever | |
| 7 | 3386166M1 | 2 | Washer | |
| 8 | 385361X1 | 4 | Washer | |
| 9 | 1441461X1 | 4 | Locknut | |
| 10 | 3712984M1 | 1 | Plate | |
| 11 | 3712277M1 | 1 | Clevis Pin | |
| 12 | 3715483M1 | 1 | Cable | |
| 13 | 3600190M1 | 1 | Clevis Pin | (12) Length 28MM |
| | 3600191M1 | 1 | Clevis Pin | (12) Length 40MM |
| 14 | 3713587M1 | 1 | Plug | |
| 15 | 1442174X1 | 1 | Washer | |
| 16 | 3386192M1 | 1 | Washer | |
| 17 | 1441461X1 | 1 | Locknut | |
| 18 | 3780175M1 | 1 | Decal | |
| 19 | 3778480M91 | 1 | Support | |
| 20 | 3389580M2 | 1 | Lever | |
| 21 | 3382979M1 | 1 | Screw Special | |
| 22 | 391989X1 | 2 | Screw Metric | M8X20 |
| 23 | 3791860M1 | 1 | Thruster | |

**FOOTNOTE [A]** BLACK
**FOOTNOTE [B]** YELLOW

| Page Title | Page Number |
|---|---|
| Belly Weight | 060-0005 |
| Weight Frame And Tow Pin | 060-0010 |
| Front Axle | 060-0015 |
| Front Axle 4 Wheel Drive - Clutch | 060-0020 |
| Guard And Transmission Shaft | 060-0025 |
| Front Axle 4 Wheel Drive | 060-0030 |
| Front Axle 4 Wheel Drive - Steering Cylinders | 060-0035 |
| Front Axle 4 Wheel Drive - Housing | 060-0040 |
| Front Axle 4 Wheel Drive - Differential | 060-0045 |
| Front Axle 4 Wheel Drive - Differential Lock Mechanism | 060-0050 |
| Front Axle 4 Wheel Drive - Final Drive | 060-0055 |
| Front Axle 4 Wheel Drive - Final Drive | 060-0060 |

1-AJ07-604-A

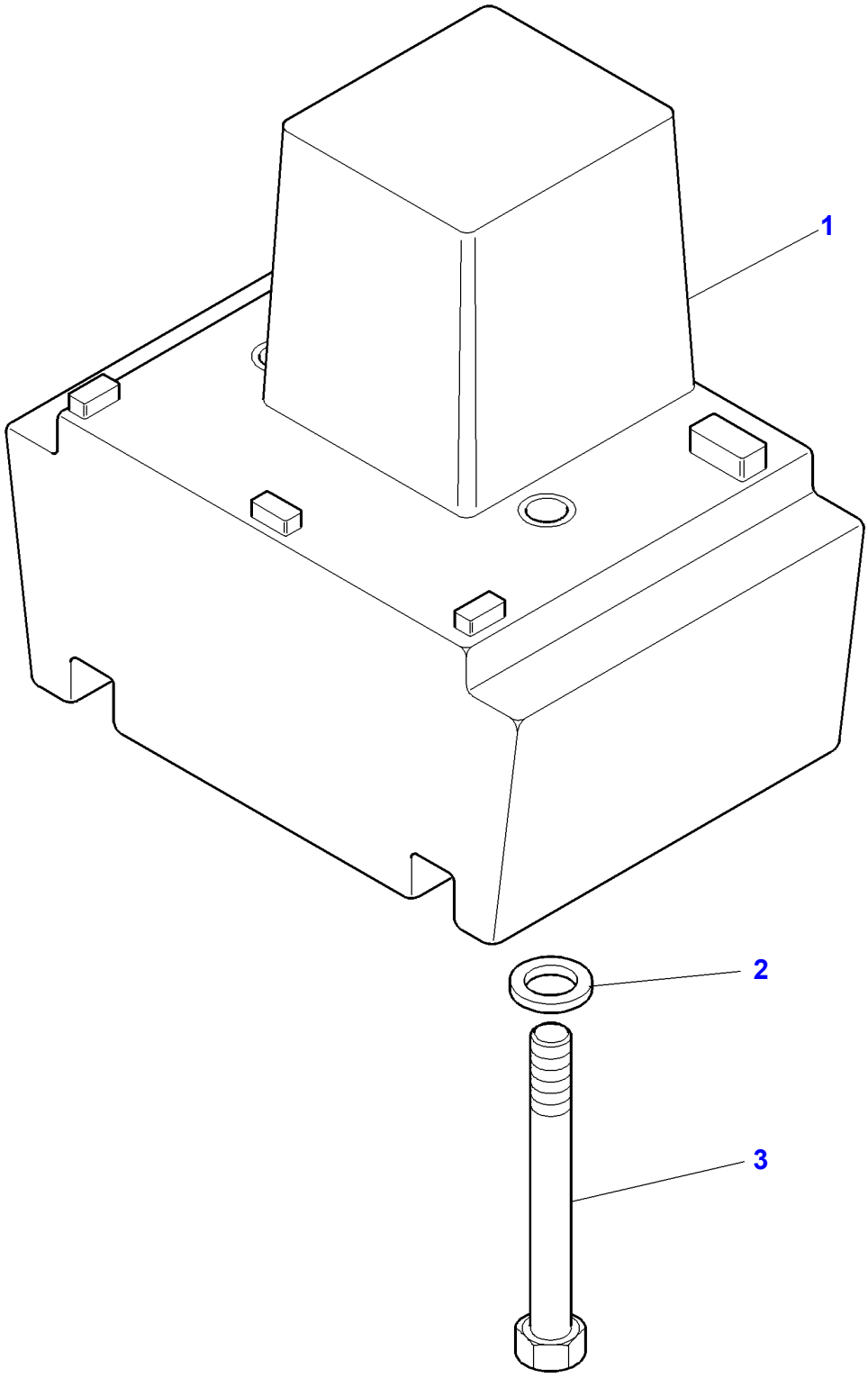

| Item | Part Number | Qty | Description | Comments |
|---|---|---|---|---|
| 1 | 3715563M1 | 1 | Weight | 540 KGS |
| 2 | 3384348M1 | 2 | Washer | |
| 3 | 3010613X1 | 2 | Screw | M20X280 |

1-AX15-612-B

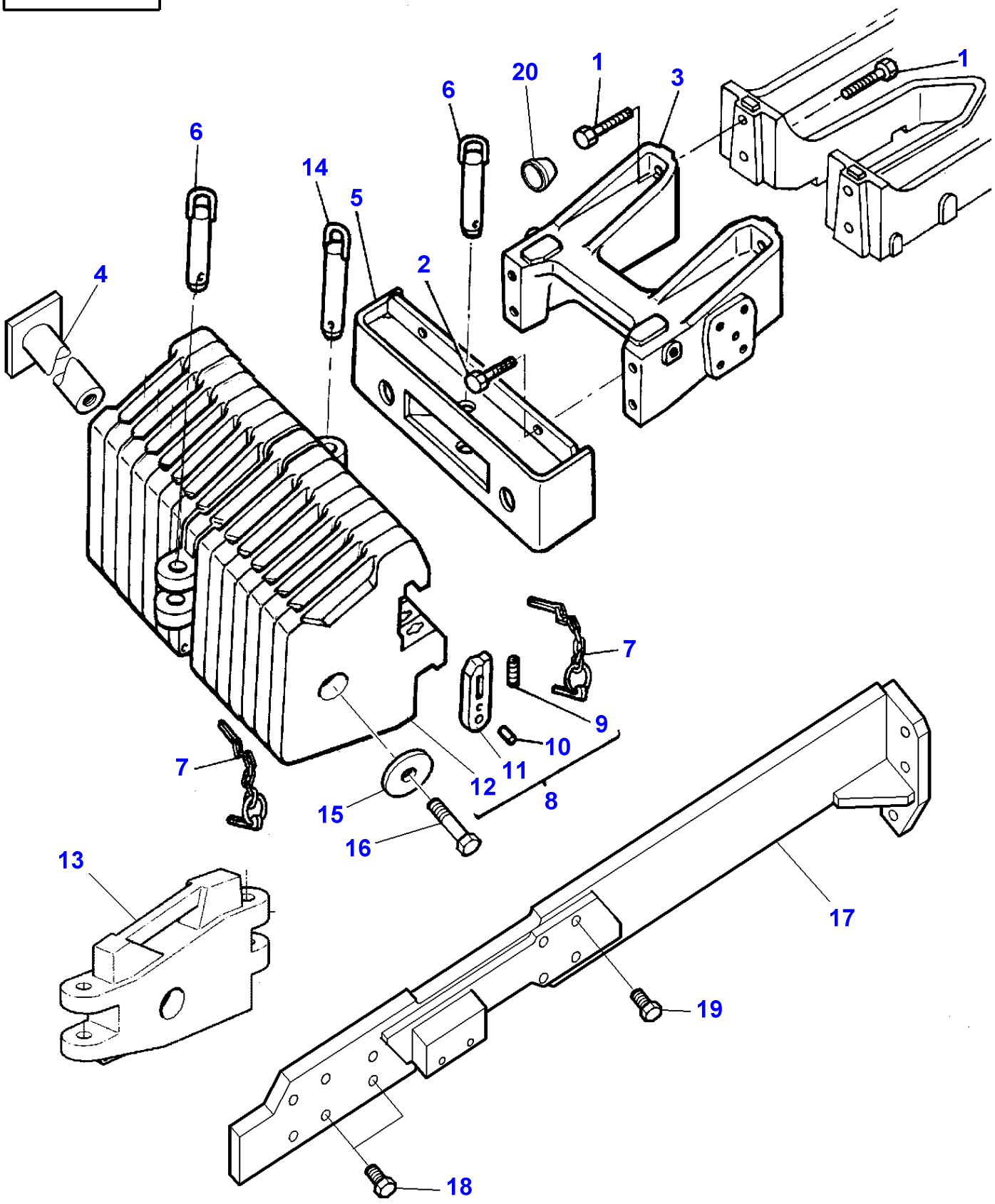

| Item | Part Number | Qty | Description | Comments |
|---|---|---|---|---|
| 1 | 3580231M1 | 4 | Screw | M20X75 |
| 2 | 1441704X1 | 4 | Screw Metric | M20X40 |
| | 1441590X1 | 4 | Bolt Metric | M20x50 |
| 3 | 3715537M1 | 1 | Spacer | |
| 4 | 3618712M1 | 1 | Bridle | Length 558MM |
| 5 | 3580888M2 | 1 | Support | |
| 6 | 3387270M91 | 1 | Pin Hitch | Length 171,5MM |
| 7 | 3382812M91 | 2 | Pin | |
| 8 | 3582867M92 | X | Weight | Thickness 35MM<br>45KG |
| 9 | 1680172M1 | 1 | Spring | (8) |
| 10 | 339080X1 | 1 | Roll Pin | (8) |
| 11 | 3581636M1 | 1 | Hasp | (8) |
| 12 | | 1 | Weight | (8)<br>Not serviced,order REF NO 8 |
| 13 | 3382789M4 | 1 | Weight | |
| 14 | 3382813M91 | 1 | Pin Hitch | Length 215MM |
| 15 | 3385963M1 | 1 | Washer | |
| 16 | 1441685X1 | 1 | Screw Metric | M16X60 |
| | 3000171X1 | 1 | Screw Metric | M16X90 |
| 17 | 3777187M2 | 1 | Runner | Left Hand |
| | 3777188M2 | 1 | Runner | Right Hand |
| 18 | 1442668X1 | 12 | Screw | M20X70 |
| 19 | 3010045X1 | 8 | Screw | M20X90 |
| 20 | 3385835M1 | 2 | Plug | |

1-AJ01-617-B

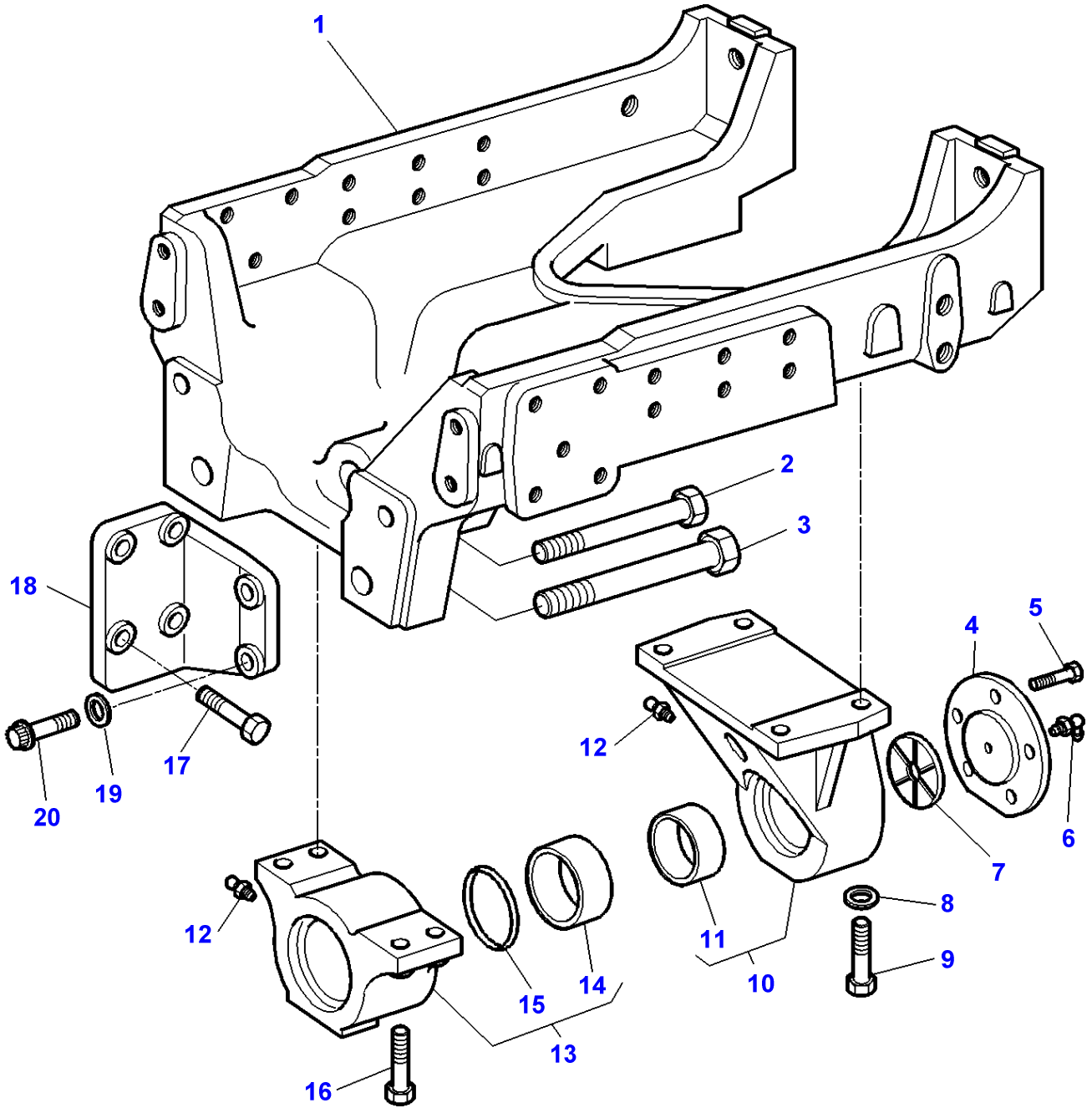

| Item | Part Number | Qty | Description | Comments |
|---|---|---|---|---|
| 1 | 3715695M4 | 1 | Axle Holder | |
| 2 | 3389552M1 | 2 | Screw | M20X155 |
| 3 | 3389553M1 | 2 | Screw | M24X165 |
| 4 | 72500774 | 1 | Blanking Cover | Up to Serial or Engine Number G309032 |
| | 3781213M1 | 1 | Blanking Cover | From Serial or Engine Number G309033 |
| 5 | 339299X1 | 5 | Screw Metric | M12X30 |
| 6 | 1441858X1 | 1 | Grease Nipple | Up to Serial or Engine Number G309032 |
| | 3781256M1 | 1 | Greaser | From Serial or Engine Number G309033 |
| 7 | 72500771 | 1 | Washer | |
| 8 | 385365X1 | 4 | Washer | |
| 9 | 3386216M1 | 4 | Screw | M20X60 |
| 10 | 3715500M11 | 1 | Bearing Carrier | |
| 11 | **3715502M1** | 1 | Bush | (10)<br>Diameter 101,6MM |
| 12 | 339608X1 | 2 | Grease Nipple | |
| 13 | 3715485M11 | 1 | Axle Carrier | |
| 14 | **3715487M1** | 1 | Bush | (13)<br>Diameter 146MM |
| 15 | 3010608X1 | 1 | Gasket | (13) |
| 16 | 3581527M1 | 4 | Screw | M20X75 |
| 17 | V529802280 | 8 | Screw | |
| 18 | V836338482 | 1 | Support | Left Hand |
| | V836338483 | 1 | Support | Right Hand |
| 19 | 3010875X1 | 4 | Washer | |
| 20 | 3009806X1 | 4 | Plough Bolt | M16X70 |

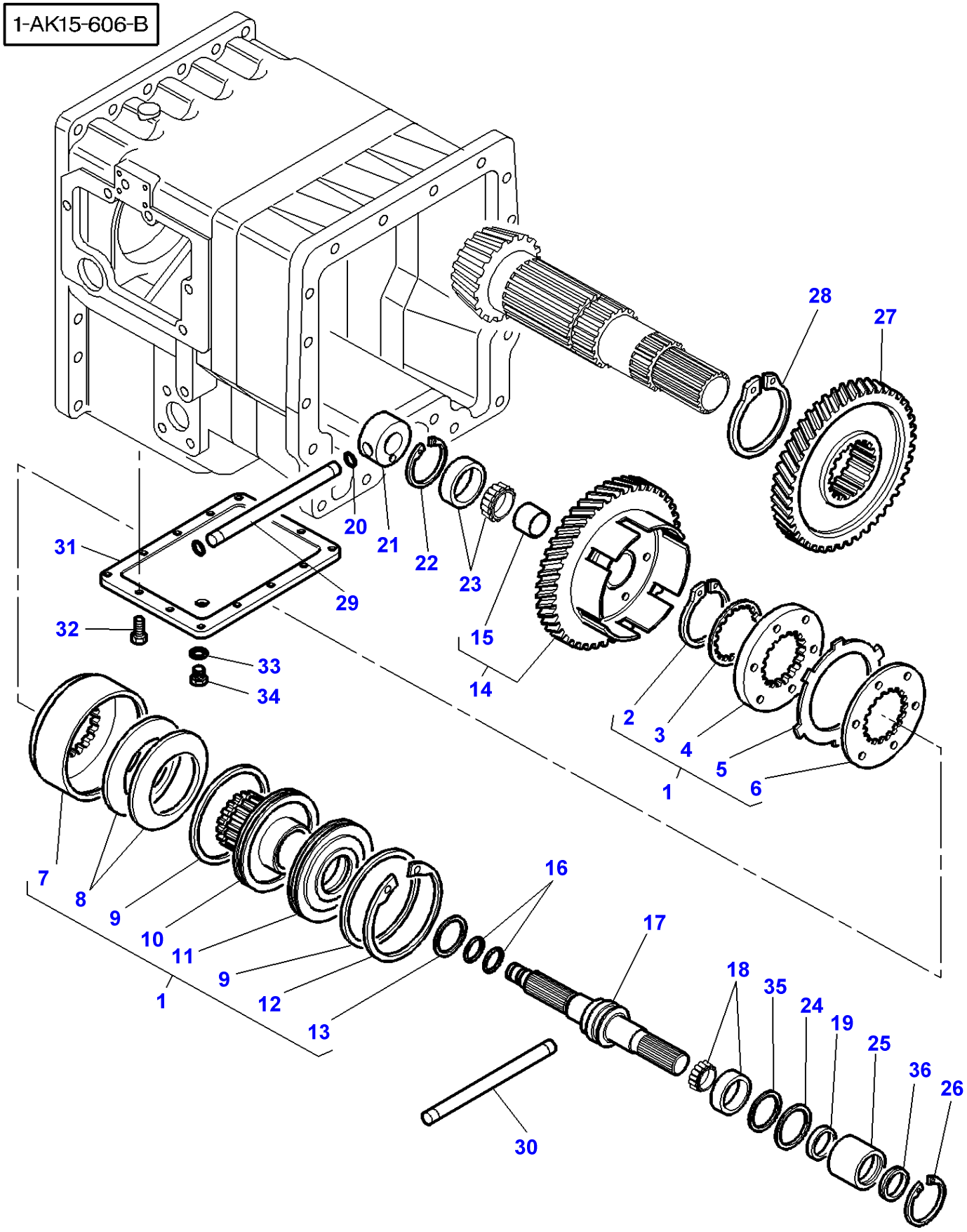
1-AK15-606-B
28
27
20
21
22
23
31
29
32
33
34
15
14
2
3
4
5
6
1
7
8
9
10
11
9
12
13
16
17
18
35
24
19
25
36
26
30

| Item | Part Number | Qty | Description | Comments |
|---|---|---|---|---|
| 1 | 3716078M13 | 1 | Clutch | |
| 2 | 1440533X1 | 1 | Circlip | (1) |
| 3 | 3387182M1 | X | Shim | (1)<br>Thickness 0,6 MM |
| | 3033343M1 | X | Shim | (1)<br>Thickness 0,8 MM |
| | 3713553M1 | X | Shim | (1)<br>Thickness 1,4 MM |
| | 3713554M1 | X | Shim | (1)<br>Thickness 1,7 MM |
| 4 | 3617232M1 | 1 | Tray | (1) |
| 5 | 3616400M2 | 7 | Disc | (1) |
| 6 | 3384488M1 | 6 | Tray | (1) |
| 7 | 3384414M2 | 1 | Housing | (1) |
| 8 | 3619473M1 | 2 | Cup Spring | (1) |
| 9 | 3384524M1 | 2 | O Ring | (1) |
| 10 | 3716509M3 | 1 | Hub | (1) |
| 11 | 3384427M1 | 1 | Cover | (1) |
| 12 | 1441403X1 | 1 | Circlip | (1) |
| 13 | 3384523M1 | 1 | O Ring | (1) |
| 14 | 3716530M13 | 1 | Pinion | Number of teeth/spines 47 |
| 15 | 3387727M1 | 1 | Bush | (14) |
| 16 | 3382874M1 | 2 | Segment | |
| 17 | 3716518M11 | 1 | Shaft | |
| 18 | 3010697X91 | 1 | Bearing Assy | |
| 19 | 3716067M2 | 1 | Oil Seal | |
| 20 | 377494X1 | 2 | O Ring | |
| 21 | 3716441M2 | 1 | Bush | |
| 22 | 1440480X1 | 1 | Circlip | |
| 23 | 339481X1 | 1 | Bearing Taper | |
| 24 | 1441885X1 | 1 | O Ring | |
| 25 | 3716815M3 | 1 | Sealing Holder | |
| 26 | 1440819X1 | 1 | Circlip | Replace and repair. Old interchangeable with new 1442770X1 |
| 27 | 3716531M3 | 1 | Pinion | Number of teeth/spines 41 |
| 28 | 1440533X1 | 1 | Circlip | |
| 29 | 3716573M1 | 1 | Tube | Length 160 MM |
| 30 | 3716572M1 | 1 | Tube | Length 95 MM |
| 31 | 3716553M2 | 1 | Cover | |
| 32 | 3009493X1 | 13 | Hex. Sock. Screw | M10x30 |
| 33 | 831497M1 | 1 | O Ring | |
| 34 | 3716563M2 | 1 | Plug | |
| 35 | 3716801M1 | X | Chock | Thickness 0,1 MM |
| | 3716802M1 | X | Chock | Thickness 0,2 MM |
| | 3716803M1 | X | Chock | Thickness 0,5 MM |
| | 3716804M1 | X | Chock | Thickness 0,8 MM |
| 36 | 3791400M1 | 1 | Gasket | |

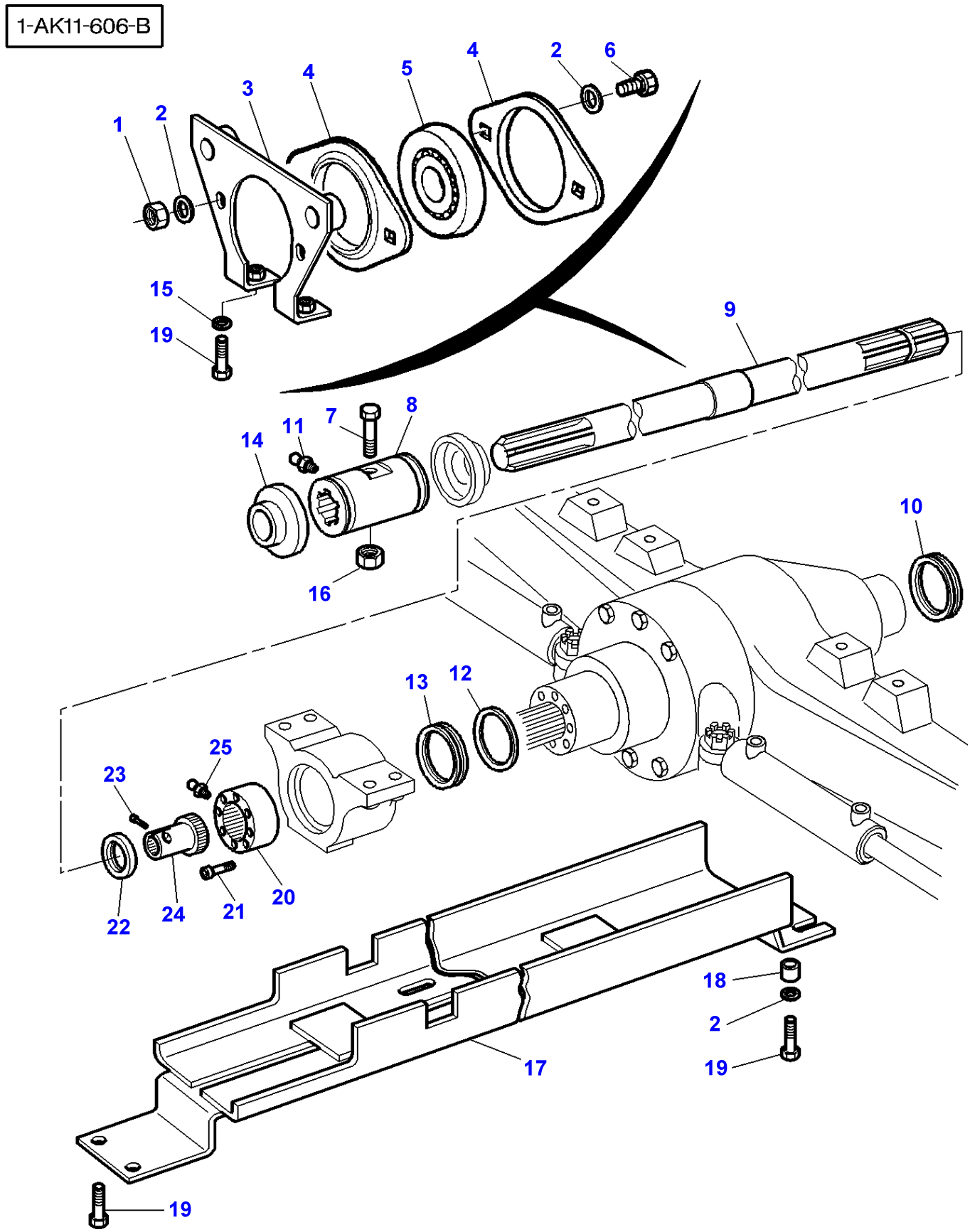
1-AK11-606-B
1
2
3
4
5
4
2
6
15
19
9
7
8
11
14
16
10
13
12
25
23
22
24
21
20
18
2
19
17
19

| Item | Part Number | Qty | Description | Comments |
|---|---|---|---|---|
| 1 | 3009693X1 | 2 | Nut Metric | |
| 2 | 390734X1 | 6 | Washer | |
| 3 | 3715987M1 | 1 | Bearer | |
| 4 | 3712872M1 | 2 | Bearing Carrier | |
| 5 | 3712873M1 | 1 | Bearing Assy | |
| 6 | 3009493X1 | 2 | Hex. Sock. Screw | M10X30 |
| 7 | 1440922X1 | 1 | Bolt | M6X60 |
| 8 | 3714416M2 | 1 | Sleeve | |
| 9 | 3715986M1 | 1 | Shaft | Length 2020MM |
| 10 | 72500775 | 1 | Seal | |
| 11 | 1441858X1 | 1 | Grease Nipple | |
| 12 | 3715944M1 | 1 | Washer | |
| 13 | 72500709 | 1 | Seal | |
| 14 | 3714575M1 | 2 | Bellows | |
| 15 | 390597X1 | 2 | Washer Metric | |
| 16 | 1441500X1 | 1 | Locknut | |
| 17 | 3715985M2 | 1 | Cowl | |
| 18 | 3042637M2 | 2 | Spacer | |
| 19 | 392054X1 | 6 | Screw | M10X22 |
| 20 | 3715981M2 | 1 | Annular Gear | |
| 21 | 1440352X1 | 8 | Bolt | M10X60 |
| 22 | 3715982M1 | 1 | Gasket | |
| 23 | 3009292X1 | 1 | Screw | M10X25 |
| 24 | 3715983M2 | 1 | Hub | |
| 25 | 339608X1 | 1 | Grease Nipple | |

1-AK01-603-A

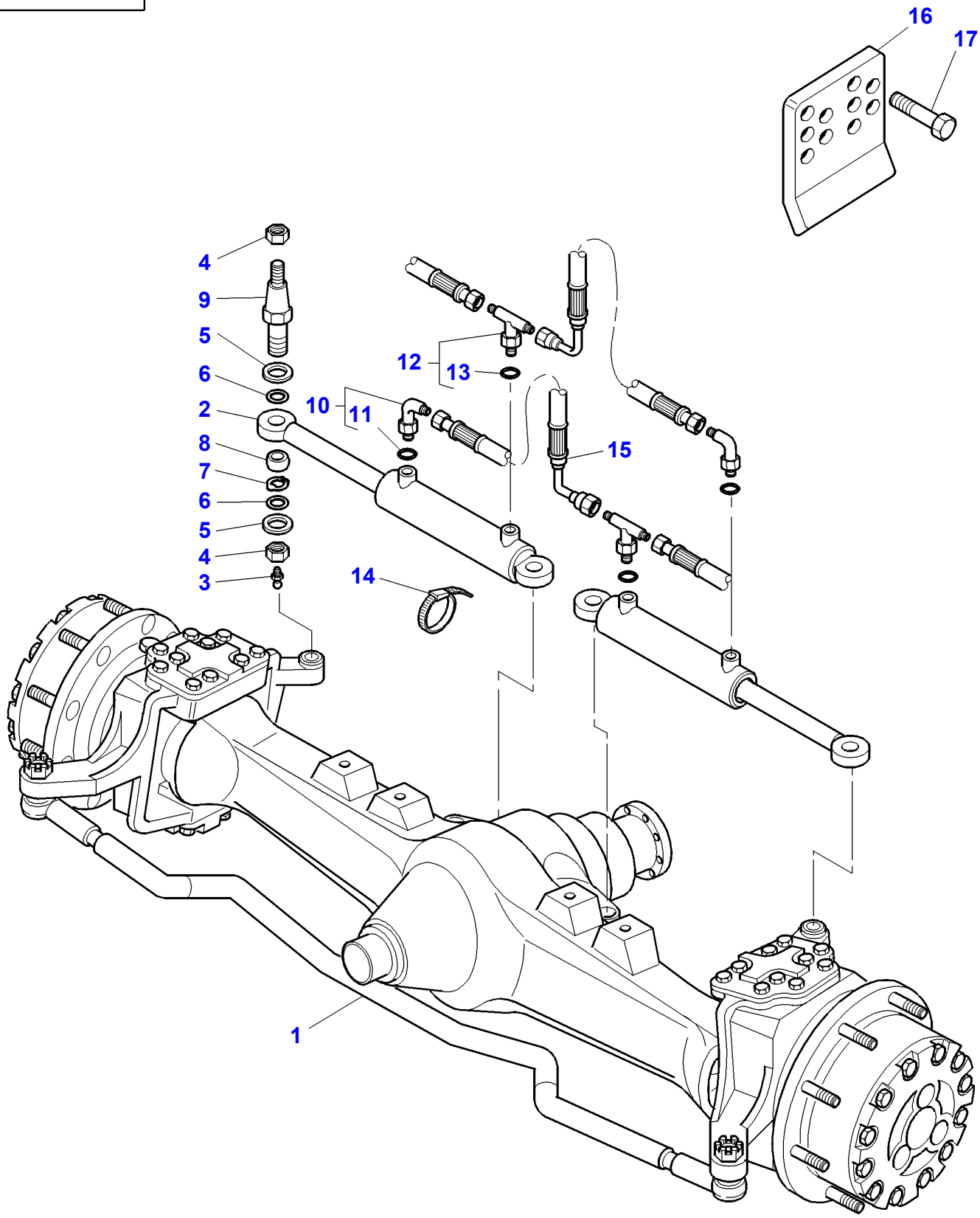

| Item | Part Number | Qty | Description | Comments |
|---|---|---|---|---|
| 1 | 3715075M1 | 1 | Front Live Axle | |
| 2 | 72163177 | 2 | Cylinder | |
| 3 | 339608X1 | 4 | Grease Nipple | |
| 4 | 353457X1 | 8 | Nut Fns | |
| 5 | 353777X1 | 8 | Washer | |
| 6 | 72161188 | 8 | Spacer | |
| 7 | 72161187 | 4 | Ring | |
| 8 | 72161185 | 4 | Bearing | |
| 9 | 72161186 | 4 | Stud | |
| 10 | 357197X91 | 2 | Elbow | |
| 11 | **831452M1** | 1 | O Ring | (10) |
| 12 | 3595495M91 | 2 | Teepiece | |
| 13 | 3019397X1 | 1 | O Ring | (12) |
| 14 | 3619622M1 | 2 | Cable Tie | |
| 15 | 3777186M91 | 2 | Hydr Hose | Length 770MM |
| 16 | 3777718M1 | 2 | Stop | |
| 17 | 1441590X1 | 4 | Bolt Metric | M20X50 |

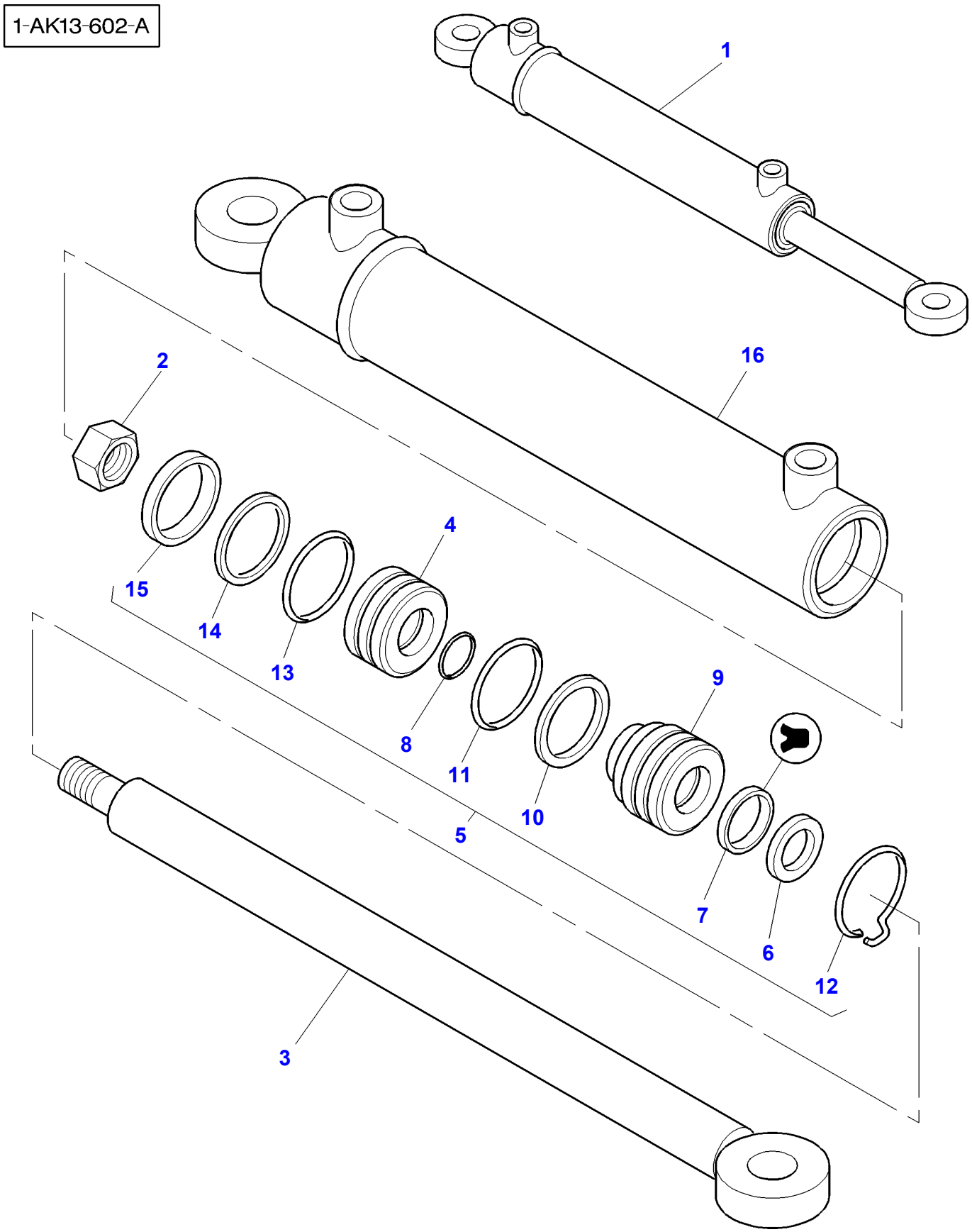
1-AK13-602-A
1
16
2
15
14
13
4
8
11
10
5
9
7
6
12
3

| Item | Part Number | Qty | Description | Comments |
|---|---|---|---|---|
| 1 | 72163177 | 1 | Cylinder | |
| 2 | 72162714 | 1 | Nut | (1)<br>3/4"-16 UTC |
| 3 | 72162716 | 1 | Rod | (1) |
| 4 | 72162715 | 1 | Piston | (1) |
| 5 | 72162718 | 1 | Kit, Seal | (1) |
| 6 | 72162723 | 1 | Wiper | (5) |
| 7 | 72162722 | 1 | Seal | (5) |
| 8 | 70923945 | 1 | O Ring | (5)<br>1/16"X3/4"ID |
| 9 | 72162717 | 1 | Gland | (1) |
| 10 | 72162721 | 1 | Washer | (5) |
| 11 | 70923826 | 1 | O Ring | (5)<br>3/16"X1-5/8"ID<br>Replace and repair. Old not interchangeable with new 72162613 |
| 12 | 72162724 | 1 | Wire | (5) |
| 13 | 72162719 | 1 | O Ring | (5) |
| 14 | 72162720 | 1 | Ring | (5) |
| 15 | 72162725 | 1 | Oil Seal | (5) |
| 16 | 72162713 | 1 | Tube | (1) |

1-AK03-604-B

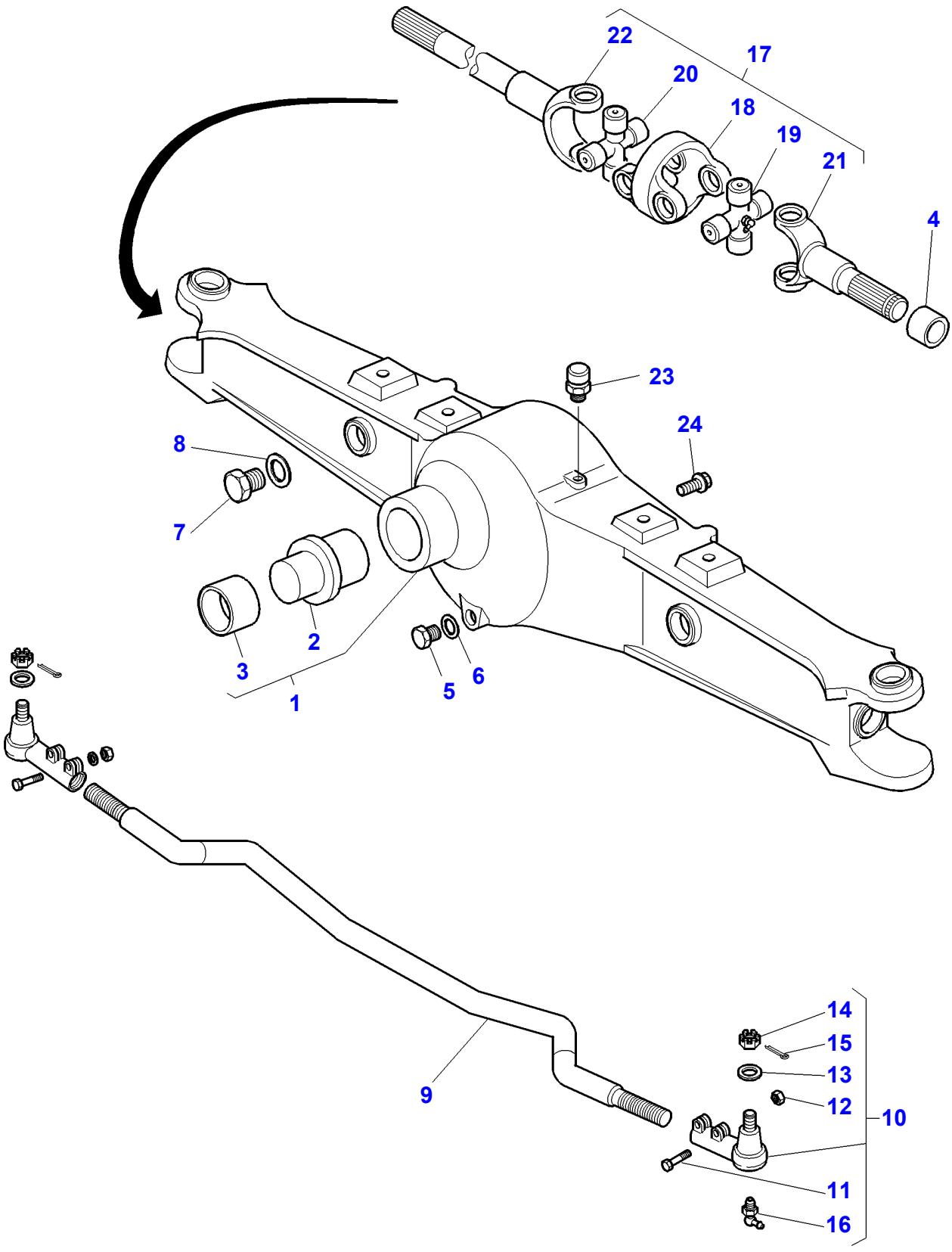

| Item | Part Number | Qty | Description | Comments |
|---|---|---|---|---|
| 1 | 72162751 | 1 | Housing | |
| 2 | 72506030 | 1 | Clevis Pin | (1) |
| 3 | 72506031 | 1 | Bush | (1) |
| 4 | 2374317 | 2 | Bush | |
| 5 | 72506039 | 1 | Plug | |
| 6 | 72162292 | 1 | Ring | |
| 7 | 72162293 | 1 | Plug | M42-1,5 |
| 8 | 72162294 | 1 | Ring | |
| 9 | 72162756 | 1 | Rod | |
| 10 | **72162306** | 1 | Toggle | Right Hand |
| | **72162307** | 1 | Toggle | Left Hand |
| | | | | Replace and repair. Old not interchangeable with new 4350393 |
| 11 | 72162732 | 4 | Capscrew | (10) |
| | | | | M10-1,0X40MM |
| 12 | 72162309 | 4 | Nut | (10) |
| | | | | M10-1,0 |
| 13 | 72162310 | 2 | Seal | (10) |
| 14 | 72162311 | 2 | Nut | (10) |
| | | | | M24-1,5 |
| 15 | PZND4021V | 2 | Pin | (10) |
| | | | | M5X50 |
| 16 | 1120697 | 2 | Greaser | (10) |
| | | | | M8-1 |
| 17 | 4347032 | 2 | Shaft | Replace and repair. Old not interchangeable with new 72506033 |
| 18 | 72162300 | 1 | Knuckle | (17) |
| 19 | 72162302 | 1 | Crosspiece | (17) |
| | | | | INNER |
| 20 | 72162301 | 1 | Crosspiece | (17) |
| | | | | OUTER |
| 21 | 72162303 | 1 | Shaft | (17) |
| | | | | SHORT |
| 22 | 72162304 | 1 | Shaft | (17) |
| | | | | LONG |
| 23 | 72162295 | 1 | Breather | |
| 24 | 4347037 | 4 | Capscrew | M14x50 |
| | | | | Replace and repair. Old not interchangeable with new 72162731 |
| | 1162825 | 8 | Capscrew | M14x40 |
| | | | | Replace and repair. Old not interchangeable with new 72162730 |

1-AK04-608-B

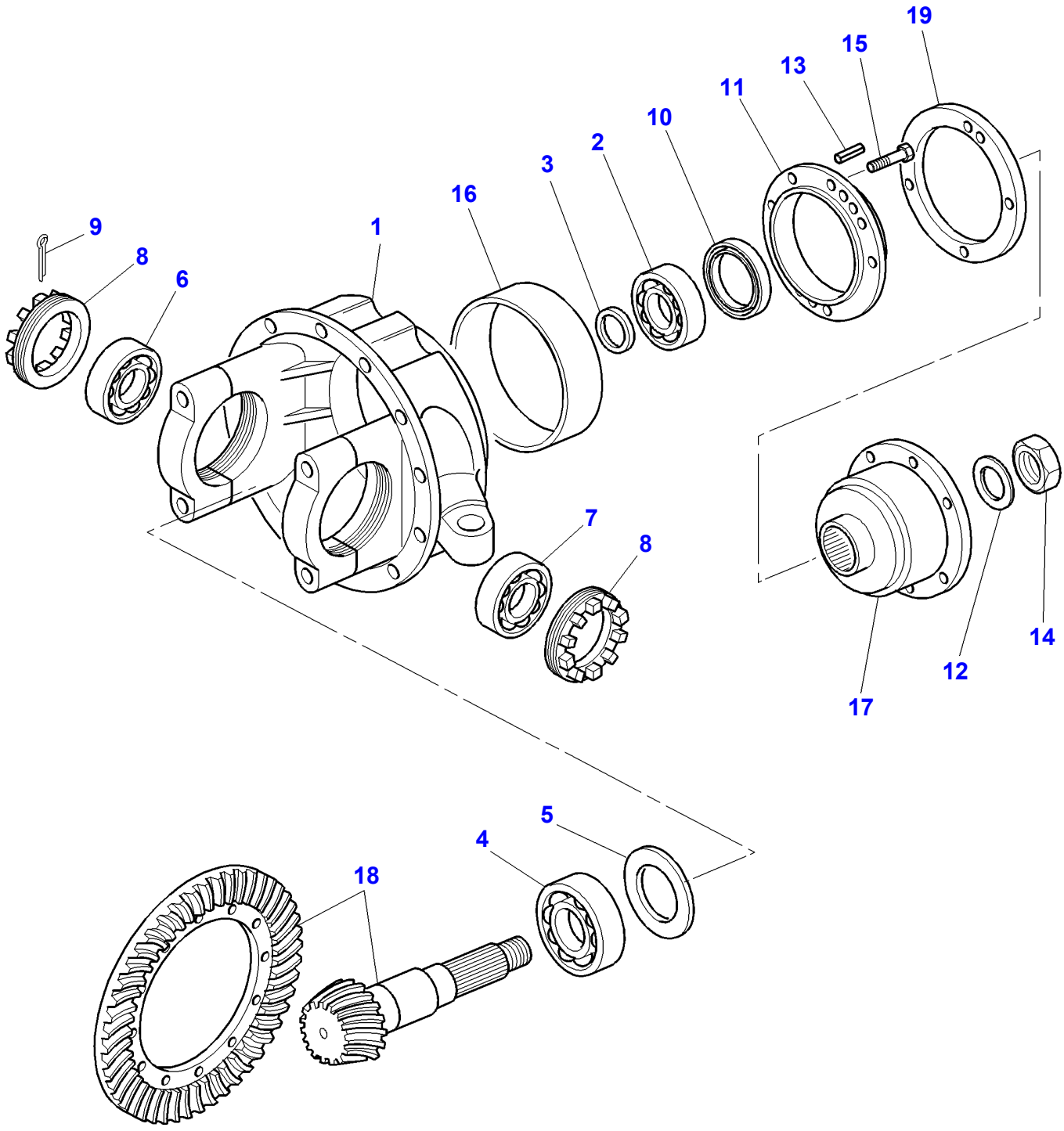

| Item | Part Number | Qty | Description | Comments |
|---|---|---|---|---|
| 1 | 72506017 | 1 | Housing | |
| 2 | 72506018 | 1 | Bearing | |
| 3 | 72162237 | X | Shim | Thickness 6,6MM |
| | 72162238 | X | Shim | Thickness 6,4MM |
| | 72162239 | X | Shim | Thickness 6,2MM |
| | 72162240 | X | Shim | Thickness 6,0MM |
| | 72162241 | X | Shim | Thickness 5,8MM |
| | 72162242 | X | Shim | Thickness 5,6MM |
| | 72162243 | X | Shim | Thickness 5,4MM |
| 4 | 72506019 | 1 | Bearing | |
| 5 | 72162246 | X | Shim | Thickness 3,0MM |
| | 72162247 | X | Shim | Thickness 2,9MM |
| | 72162248 | X | Shim | Thickness 2,8MM |
| | 72162249 | X | Shim | Thickness 2,7MM |
| | 72162250 | X | Shim | Thickness 2,0MM |
| | 72162251 | X | Shim | Thickness 1,9MM |
| | 72162252 | X | Shim | Thickness 1,8MM |
| | 72162253 | X | Shim | Thickness 1,7MM |
| | 72162254 | X | Shim | Thickness 1,6MM |
| | 72162255 | X | Shim | Thickness 1,5MM |
| | 72162256 | X | Shim | Thickness 1,4MM |
| | 72162257 | X | Shim | Thickness 1,3MM |
| | 72162258 | X | Shim | Thickness 1,2MM |
| | 72162259 | X | Shim | Thickness 1,1MM |
| 6 | 72506020 | 1 | Bearing | Right Hand |
| 7 | 72506021 | 1 | Bearing | Left Hand |
| 8 | 72162264 | 2 | Nut | |
| 9 | 1132649 | 2 | Pin | Diameter 6.3 MM<br>Length 45 MM |
| 10 | 72514095 | 1 | Oil Seal | |
| 11 | 72506023 | 1 | Flange | |
| 12 | 72514096 | 1 | Washer | |
| 13 | 72162922 | 1 | Pin | M7X30 |
| 14 | 4324788 | 1 | Nut | M30-1,5 |
| 15 | 1440350X1 | 3 | Screw Metric | M6X20 |
| 16 | 72506025 | 1 | Bush | |
| 17 | 72515313 | 1 | Flange | |
| 18 | 72514094 | 1 | Kit, Bevel Gear | |
| 19 | 72515314 | 1 | Seal | |

1-AK12-605-A

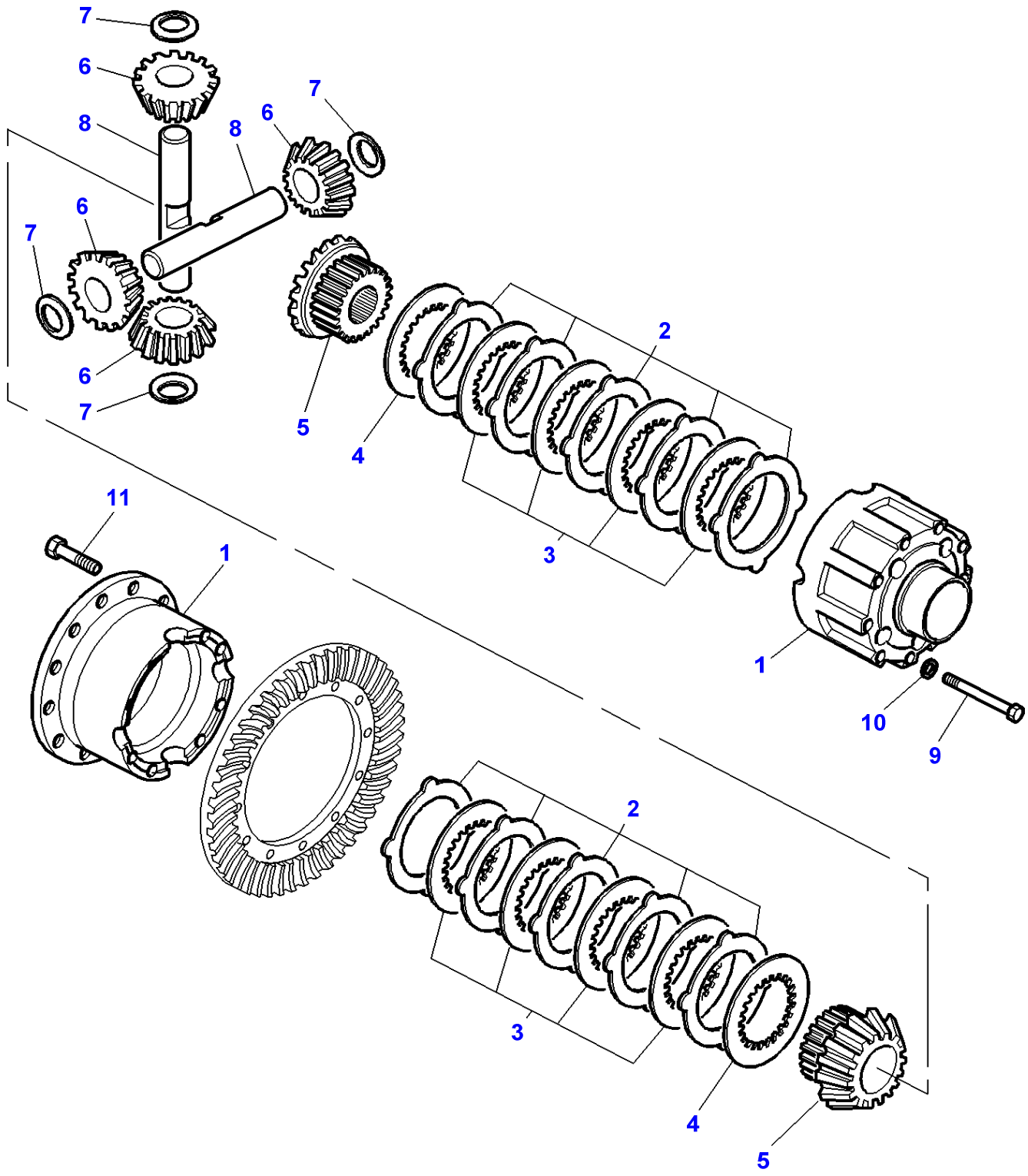

| Item | Part Number | Qty | Description | Comments |
|---|---|---|---|---|
| | 4325142 | 1 | Differential | |
| 1 | 72162727 | 1 | Case | |
| 2 | 72506027 | 10 | Plate | Thickness 1,8MM |
| | 72162272 | 10 | Plate | Thickness 1,9MM |
| | 72162273 | 10 | Plate | Thickness 2,0MM |
| 3 | 72162274 | 8 | Disc | |
| 4 | 72162275 | 2 | Plate | Thickness 3,1MM |
| 5 | 72162280 | 2 | Gear | Number of teeth/spines 29 |
| 6 | 72162281 | 4 | Pinion | |
| 7 | 72162282 | 4 | Washer | |
| 8 | 72162283 | 2 | Shaft | |
| 9 | 72162728 | 8 | Capscrew | M12X95 |
| 10 | 72162455 | 8 | Washer | M12 |
| 11 | 72162729 | 12 | Capscrew | M14X25 |

1-AK05-607-A

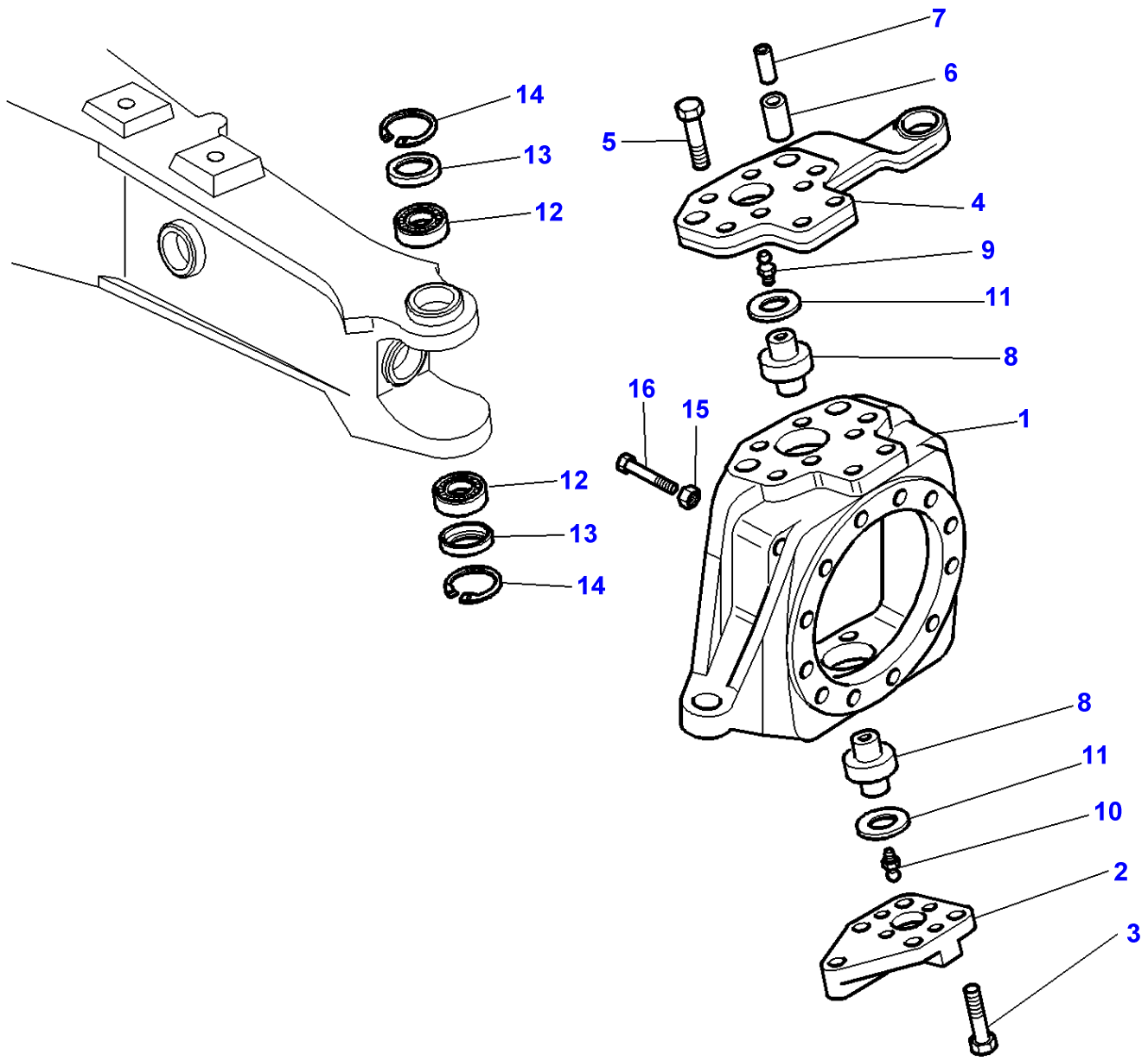

| Item | Part Number | Qty | Description | Comments |
|---|---|---|---|---|
| 1 | 4350433 | 1 | Housing | Left Hand |
| | 72162753 | 1 | Housing | Right Hand |
| 2 | 72162315 | 2 | Cover | |
| 3 | 1112619 | 8 | Capscrew | M14X40 |
| 4 | 4325207 | 1 | Arm | Left Hand |
| | | | | Replace and repair. Old not interchangeable with new 72162317 |
| | 72162316 | 1 | Arm | Right Hand |
| 5 | 1111677 | 12 | Capscrew | M14X55 |
| 6 | 1115520 | 4 | Pin | Diameter 20X50 |
| 7 | 1137371 | 4 | Pin | Diameter 12X50 |
| 8 | 4325209 | 4 | Pivot | |
| 9 | 1168226 | 2 | Greaser | M10 |
| 10 | 1120698 | 2 | Greaser | 45' |
| 11 | 72162322 | X | Shim | Thickness 2,8MM |
| | 72162323 | X | Shim | Thickness 2,9MM |
| | 72162324 | X | Shim | Thickness 3,0MM |
| | 72162325 | X | Shim | Thickness 3,1MM |
| | 72162326 | X | Shim | Thickness 3,2MM |
| | 72162327 | X | Shim | Thickness 3,3MM |
| | 72162328 | X | Shim | Thickness 3,4MM |
| | 72162329 | X | Shim | Thickness 3,5MM |
| | 72162330 | X | Shim | Thickness 3,6MM |
| 12 | 72162331 | 4 | Bearing | |
| 13 | 4324772 | 4 | Cap | |
| 14 | 4324773 | 4 | O Ring | Diameter 4X57 ID |
| 15 | 72162884 | 4 | Nut | M18 |
| 16 | 72162752 | 4 | Stop | |

1-AK05-608-A

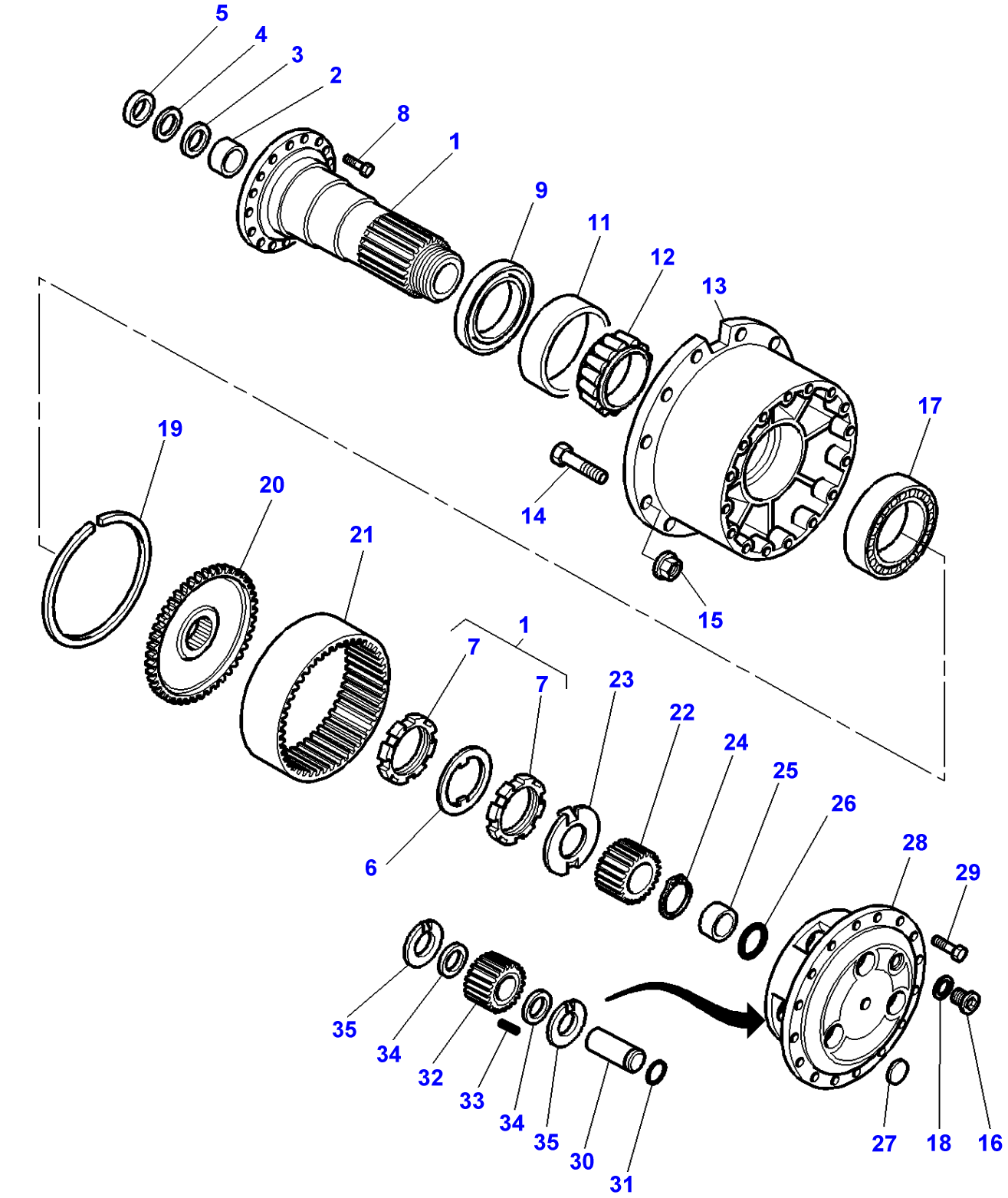
5
4
3
2
8
1
9
11
12
13
17
19
20
21
14
15
1
7
7
23
22
24
25
26
28
29
6
35
34
32
33
34
35
30
31
27
18
16

| Item | Part Number | Qty | Description | Comments |
|---|---|---|---|---|
| 1 | 72162335 | 2 | Spindle | |
| 2 | 2374317 | 2 | Bush | Replace and repair. Old not interchangeable with new 72162296 |
| 3 | 4341193 | 2 | Seal | Replace and repair. Old not interchangeable with new 72162297 |
| 4 | 4342918 | 2 | Ring | Replace and repair. Old not interchangeable with new 72162298 |
| 5 | 4341194 | 2 | Plate | |
| 6 | 72162336 | 2 | Washer | |
| 7 | 72162337 | 4 | Nut | (1)<br>M70X1.5 |
| 8 | 72506034 | 24 | Capscrew | M16X35 |
| 9 | 72506036 | 2 | Seal | Diameter 140MM OD |
| 10 | 72162339 | 2 | Washer | [A] |
| 11 | 834951M1 | 2 | Cone Cup | |
| 12 | 4336119 | 2 | Bearing Cone | |
| 13 | 72162342 | 2 | Hub | |
| 14 | 72162343 | 24 | Bolt | M22-1.5 |
| 15 | 72162344 | 24 | Nut | M22 |
| 16 | 72506038 | 4 | Plug | M24-1.5 |
| 17 | 72506035 | 2 | Bearing | |
| 18 | 72162292 | 4 | Ring | |
| 19 | 72162347 | 2 | Ring | |
| 20 | 72162734 | 2 | Carrier | |
| 21 | 72162349 | 2 | Gear | Number of teeth/spines 63 |
| 22 | 72162350 | 2 | Gear | Number of teeth/spines 15 |
| 23 | 72162351 | 2 | Washer | |
| 24 | 72162352 | 2 | Ring | |
| 25 | 72162353 | 2 | Plug | |
| 26 | 72162354 | X | Shim | Thickness 0,3MM |
| | 72162355 | X | Shim | Thickness 0,5MM |
| | 72162356 | X | Shim | Thickness 1,0MM |
| | 72162357 | X | Shim | Thickness 3,0MM |
| 27 | 72162358 | 2 | Cap | |
| 28 | 72162735 | 2 | Carrier | |
| 29 | 1112619 | 32 | Capscrew | M14X40 |
| 30 | 72162360 | 6 | Pin | |
| 31 | 72162361 | 6 | Ring | |
| 32 | 4346050 | 6 | Gear | |
| 33 | 72162363 | 138 | Roller | |
| 34 | 72506037 | 12 | Washer | |
| 35 | 72162365 | 12 | Washer | |

**FOOTNOTE [A]** NOT ILLUSTRATED

| Page Title | Page Number |
|---|---|
| Steering - Steering Wheel And Column | 070-0005 |
| Steering - Steering Wheel And Column - Telescopic Steering Wheel | 070-0010 |
| Steering - Steering Pump - 4 Wheels Drive | 070-0015 |
| Steering Hydraulic Lines - 4 Wheels Drive | 070-0020 |
| Hydraulics Load Sensing - Hydraulic Cover Lh - With Pump 45cc | 070-0025 |
| Hydraulics Load Sensing - Hydraulic Cover Lh - With Pump 150 L/mm | 070-0030 |
| Hydraulics Load Sensing - Hydraulic Cover Rh - With Pump 45cc | 070-0035 |
| Hydraulics Load Sensing - Hydraulic Cover Rh - Pump 45cc / With Trailer Braking | 070-0040 |
| Hydraulics Load Sensing - Hydraulic Cover Rh - With Pump 110 L/mm - Without Trailer Braking | 070-0045 |
| Hydraulics Load Sensing - Hydraulic Cover Rh - Pump 45cc / Hydr. Lines / With Trailor Braking | 070-0050 |
| Hydraulics Load Sensing - Hydraulic Cover Rh - Pump 45cc / Hydr. Lines / Without Trailor Braking | 070-0055 |
| Hydraulics Load Sensing - Hydraulic Cover Rh - With Hydraulic Pump 110 L/mn / DUAL CONTROL DISTRIBUTOR FEEDING | 070-0060 |
| Hydraulics - Hydraulic Cover Rh - Pump 45cc / Electrovalves | 070-0065 |
| Hydraulics - Hydraulic Cover Rh - Pump 45cc / Hydr. Lines | 070-0070 |
| Hydraulics - Hydraulic Cover Rh - Pump 60cc / Hydr. Lines | 070-0075 |
| Hydraulics Load Sensing - Hydraulic Cover Rh - With Pump 150 L/mm | 070-0080 |
| Hydraulics Load Sensing - Hydraulic Cover Rh - With Pump 150 L/mm - Without Trailor Braking | 070-0085 |
| Hydraulics Load Sensing - Hydraulic Cover Rh - With Pump 150 L/mm - With Trailor Braking | 070-0090 |
| Hydraulics Load Sensing - Hydraulic Cover Rh - Pump 60cc / Hydr. Lines - With Trailor Braking | 070-0095 |
| Hydraulics Load Sensing - Hydraulic Cover Rh - WITH PUMP 60CC / HYDR. LINES / WITH OR WITHOUT TR AILOR BRAKING | 070-0100 |
| Hydraulics - Hydraulic Cover Rh - Pump 60cc / Electrovalves | 070-0105 |
| Hydraulic Circuit Lube Systeme - With Full Powershift | 070-0110 |
| Hydraulic Circuit Lube Systeme - With Full Powershift | 070-0115 |
| Hydraulic Circuit Lube Systeme - With Pump 45cc | 070-0120 |
| Hydraulic Circuit Lube Systeme - With Pump 150 L/mm | 070-0125 |
| Oil Cooler | 070-0130 |
| Brakes - Pedals | 070-0135 |
| Brakes - Master Cylinder - ASSISTED - WITHOUT TRAILER BRAKING | 070-0140 |
| Brakes - Master Cylinder - ASSISTED - FULL POWERSHIFT - WITH TRAILER BRAKING | 070-0145 |
| Brake Pipes And Master Cylinder - ASSISTED - WITHOUT TRAILER BRAKING | 070-0150 |
| Brake Pipes And Master Cylinder - ASSISTED - FULL POWERSHIFT - WITH TRAILER BRAKING | 070-0155 |
| ASSISTED BRAKES - PIPES AND FITTING | 070-0160 |
| ASSISTED BRAKES - PIPES AND FITTING | 070-0165 |
| ASSISTED BRAKES - PIPES AND FITTING - Without Trailer Braking | 070-0170 |
| ASSISTED BRAKES - PIPES AND FITTING - With Trailer Braking | 070-0175 |
| ASSISTED BRAKES - PIPES AND FITTING - Accumulator | 070-0180 |
| Brakes - Hydraulic Pipes - With Rear Axle Housings Outer Gear | 070-0185 |
| Brakes - Hydraulic Pipes | 070-0190 |
| Electronic Lift - Hydraulic Valve | 070-0195 |
| Electronic Lift - Hydraulic Valve | 070-0200 |
| Auxiliary Hydraulics - Distributor Installation - 2 Distributors | 070-0205 |
| Auxiliary Hydraulics - Distributor Installation - 3 Distributors | 070-0210 |
| Auxiliary Hydraulics - Distributor Installation - 4 Distributors | 070-0215 |
| Dipstick / Centre Housing | 070-0220 |
| Hydraulic Coupling | 070-0225 |
| Distributor - 2 Distributors | 070-0230 |
| Auxiliary Hydraulics - Distributor Installation - 2 DISTRIBUTORS - PLUMBING | 070-0235 |

| | |
|---|---|
| Distributor - 3 Distributors | 070-0240 |
| Auxiliary Hydraulics - Distributor Installation - 3 DISTRIBUTORS - Plumbing | 070-0245 |
| Distributor - 3 DISTRIBUTORS - FOR HYDRAULIC MOTOR | 070-0250 |
| Auxiliary Hydraulics - Distributor Installation - 3 DISTRIBUTORS - FOR HYDRAULIC MOTOR - PLUMBING | 070-0255 |
| Distributor - 3 Distributors | 070-0260 |
| Auxiliary Hydraulics - Distributor Installation - 3 DISTRIBUTORS - Plumbing | 070-0265 |
| Distributor - 3 DISTRIBUTORS - DUAL CONTROL | 070-0270 |
| Auxiliary Hydraulics - Distributor Installation - 3 DISTRIBUTORS - DUAL CONTROL - PLUMBING | 070-0275 |
| Distributor - 4 Distributors | 070-0280 |
| Distributor - 4 DISTRIBUTORS - FOR HYDRAULIC MOTOR | 070-0285 |
| Auxiliary Hydraulics - Distributor Installation - 4 DISTRIBUTORS - FOR HYDRAULIC MOTOR - PLUMBING | 070-0290 |
| Distributor - 4 Distributors | 070-0295 |
| Auxiliary Hydraulics - Distributor Installation - 4 Distributors | 070-0300 |
| Distributor - 4 DISTRIBUTORS - DUAL CONTROL | 070-0305 |
| Auxiliary Hydraulics - Distributor Installation - 4 DISTRIBUTORS - DUAL CONTROL - PLUMBING | 070-0310 |
| Distributor - 4 DISTRIBUTORS - FOR HYDRAULIC MOTOR - DUAL CONTRO L | 070-0315 |
| Auxiliary Hydraulics - Distributor Installation - 4 DISTRIBUTORS - FOR HYDRAULIC MOTOR - DUAL CONTRO L - PLUMBING | 070-0320 |
| Auxiliary Hydraulics - 2 LOAD SENSING DISTRIBUTORS CONTROL | 070-0325 |
| Auxiliary Hydraulics - 3 LOAD SENSING DISTRIBUTORS CONTROL | 070-0330 |
| Auxiliary Hydraulics - 4 Distributors | 070-0335 |

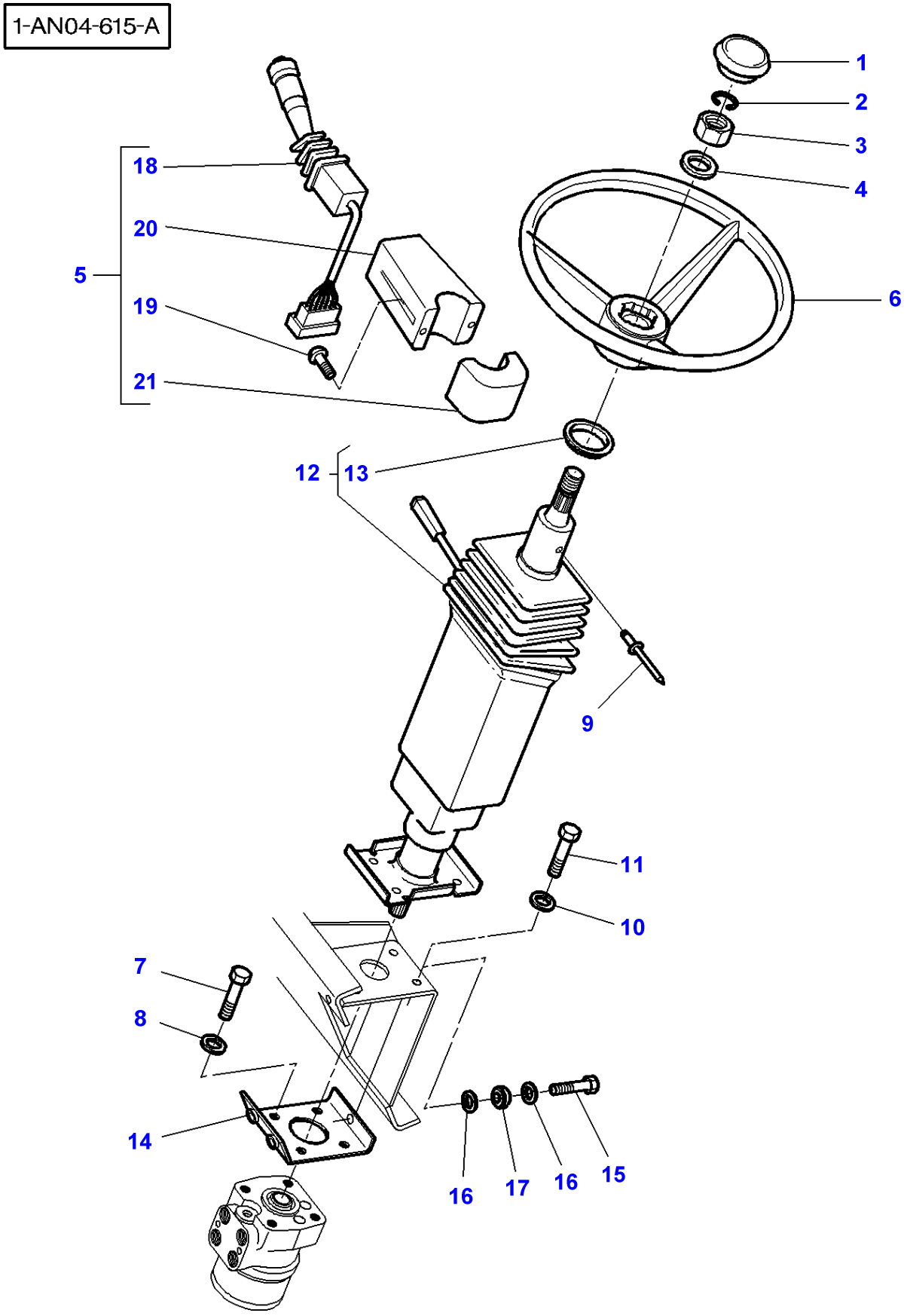
1-AN04-615-A
1
2
3
4
5
6
7
8
9
10
11
12
13
14
15
16
16
17
18
19
20
21

| Item | Part Number | Qty | Description | Comments |
|---|---|---|---|---|
| 1 | 3618970M91 | 1 | Helmet | |
| 2 | 961714M1 | 1 | Ring | Up to Serial or Engine Number H176010 |
| 3 | 339571X1 | 1 | Nut Metric | M14 |
| 4 | 390585X1 | 1 | Washer Metric | Up to Serial or Engine Number H036021<br>Diameter M16 |
| | 390973X1 | 1 | Washer Metric | From Serial or Engine Number H036022<br>Diameter 15X28X2,5MM |
| 5 | 3713679M92 | 1 | Switch,Indirect | |
| 6 | 3385796M2 | 1 | Steering Wheel | Up to Serial or Engine Number H176010 |
| | 3809661M1 | 1 | Steering Wheel | From Serial or Engine Number H176011 |
| 7 | 339282X1 | 4 | Screw Metric | M10X16 |
| 8 | 390734X1 | 4 | Washer | |
| 9 | 338941X1 | 1 | Rivet | 4 X 7,5MM |
| 10 | 1440921X1 | 4 | Washer Metric | M8 |
| 11 | 339124X1 | 4 | Hex. Sock. Screw | |
| 12 | 3713868M2 | 1 | Column | See Page - Reference Number 070-0010/1 |
| 13 | | 1 | Gasket | See Page - Reference Number 070-0010/16 |
| 14 | 3388920M93 | 1 | Support | |
| 15 | 3009494X1 | 3 | Screw Metric | M10X35 |
| 16 | 3389958M1 | 6 | Washer | |
| 17 | 1619912M1 | 3 | Vibration Mount | |
| 18 | **3713669M2** | 1 | Switch,Indirect | (5) |
| 19 | 3713785M1 | 6 | Screw | (5) |
| 20 | 3713680M1 | 1 | Case Assy | (5) |
| 21 | 3713784M1 | 1 | Cover | (5) |

1-AN04-603-A

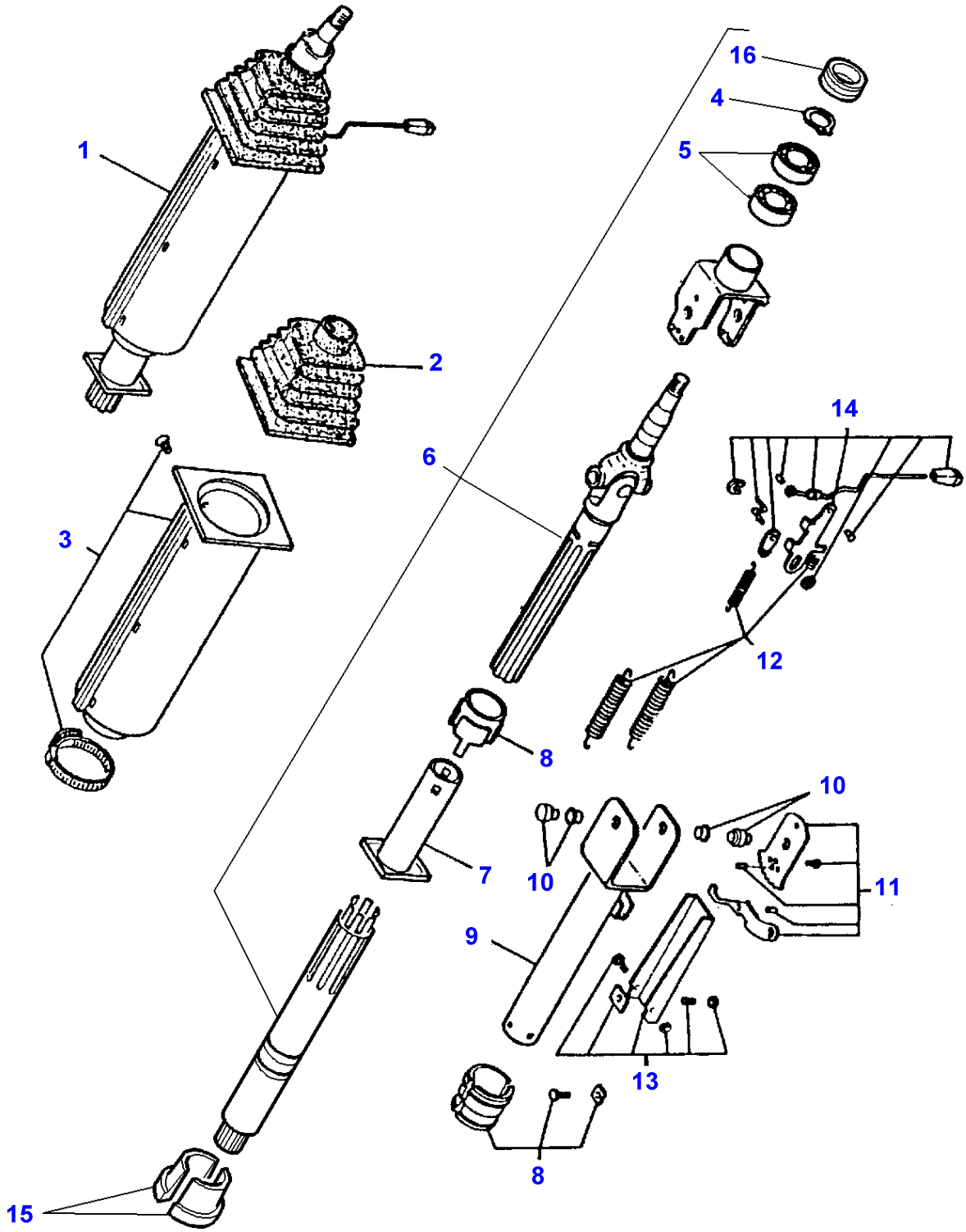

| Item | Part Number | Qty | Description | Comments |
|---|---|---|---|---|
| 1 | 3713868M2 | 1 | Column | |
| 2 | 3902566M91 | 1 | Bellows | (1) |
| 3 | 3902568M91 | 1 | Case Assy | (1) |
| 4 | 1440475X1 | 1 | Circlip | (6) |
| 5 | 1440872X1 | 2 | Bear. 6004 Rs | (6) |
| 6 | 3902564M1 | 1 | Shaft | (1) |
| 7 | 3902565M1 | 1 | Column | (1) |
| 8 | 3900242M91 | 1 | Parts Pack | (1) |
| 9 | 3900241M91 | 1 | Column | (1) |
| 10 | 3900164M91 | 1 | Clevis Pin | (1) |
| 11 | 3900146M91 | 1 | Kit, Lever | (1) |
| 12 | 3900167M91 | 1 | Kit, Spring | (1) |
| 13 | 3900166M91 | 1 | Kit, Brake | (1) |
| 14 | 3902567M91 | 1 | Kit, Lever | (1) |
| 15 | 3900145M1 | 1 | Bearing | (1) |
| 16 | 3902578M1 | 1 | Gasket | (6) |

1-AN07-605-B

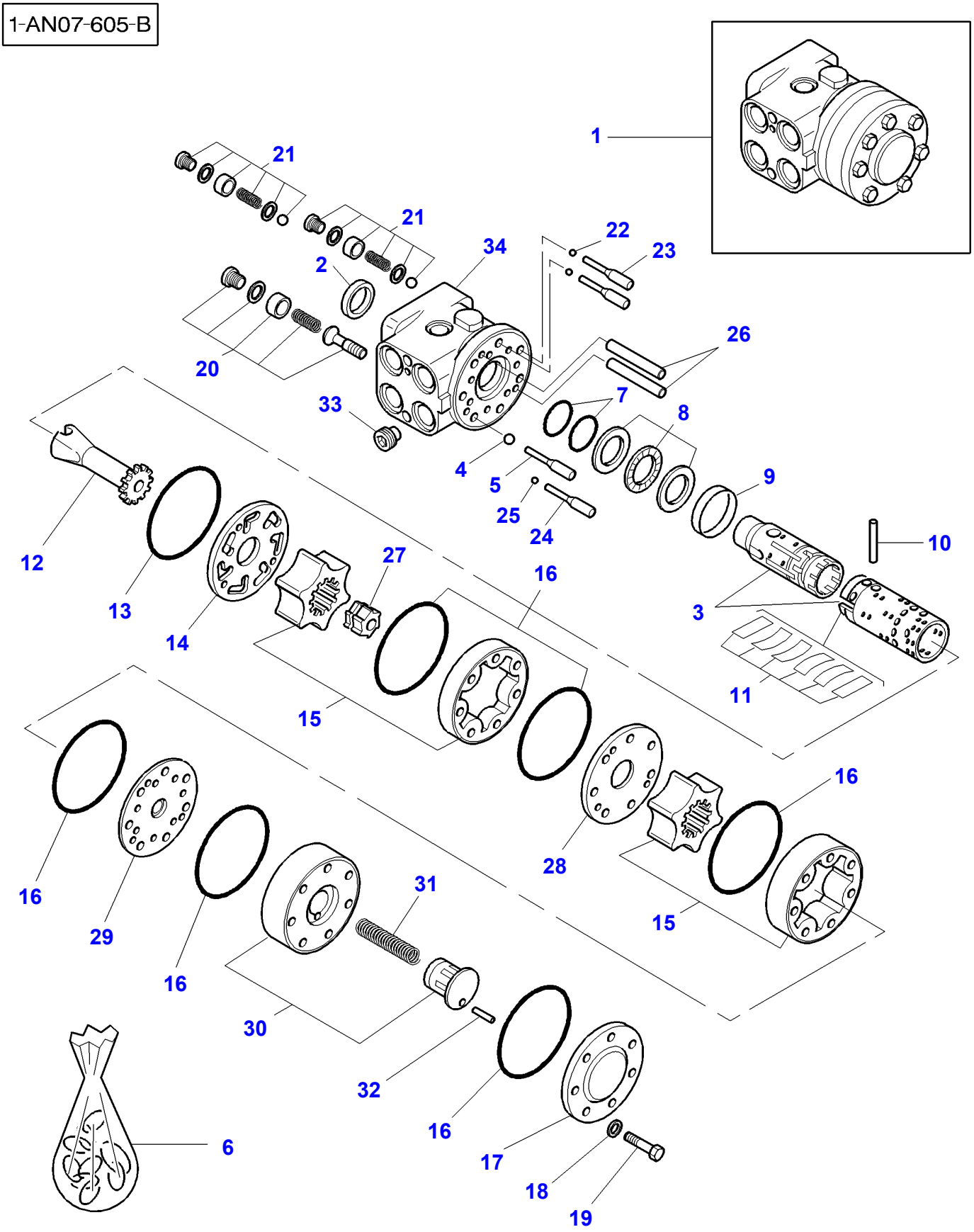
1
21
21
22
23
34
2
20
26
33
7
8
4
5
25
24
9
10
12
13
14
27
16
3
11
15
16
16
29
16
31
28
15
30
32
16
6
17
18
19

| Item | Part Number | Qty | Description | Comments |
|---|---|---|---|---|
| 1 | 3716328M1 | 1 | Distributor | OSPD 100/260 LS |
| 2 | 1887719M1 | 1 | Seal | (6) |
| 3 | | 1 | Pump | (1) |
| | | | | Not serviced,order REF 1 |
| 4 | 1806311M1 | 1 | Ball | (1) |
| 5 | 3902962M91 | 1 | Roll Pin | (1) |
| 6 | 3903005M91 | 1 | Parts Pack | (1) |
| 7 | | 1 | O Ring | (6) |
| | | | | Not serviced,order REF 6 |
| 8 | 1894414M91 | 1 | Bearing Assy | (1) |
| 9 | 1806303M1 | 1 | Bush | (1) |
| 10 | 1806310M1 | 1 | Pin | (1) |
| 11 | 1894415M1 | 1 | Kit, Spring | (1) |
| 12 | 3902963M1 | 1 | Shaft | (1) |
| 13 | 1806314M1 | 1 | Seal | (6) |
| 14 | 3902966M91 | 1 | Plate | (1) |
| 15 | 3902964M91 | 1 | Kit, Gear | (1) |
| | | | | 100CC |
| | 3902965M91 | 1 | Kit, Gear | (1) |
| | | | | 260CC |
| 16 | 3902967M1 | 6 | O Ring | (6) |
| 17 | 1806316M1 | 1 | Cap | (1) |
| 18 | 1806317M1 | 7 | Washer | (6) |
| 19 | 3902968M1 | 7 | Screw | (1) |
| 20 | 3902076M91 | 1 | Pressure Valve | (1) |
| 21 | 1897432M91 | 2 | Parts Pack | (1) |
| 22 | 1897434M1 | 2 | Ball | (1) |
| 23 | 3903002M91 | 2 | Roll Pin | (1) |
| 24 | 3902969M91 | 1 | Pressure Valve | (1) |
| 25 | 3902970M1 | 1 | Ball | (1) |
| 26 | 3902971M1 | 2 | Pin | (1) |
| 27 | 3902972M1 | 1 | Shaft | (1) |
| 28 | 3902973M1 | 1 | Plate | (1) |
| 29 | 3903001M1 | 1 | Plate | (1) |
| 30 | | 1 | Body Pump | (1) |
| | | | | Not serviced,order REF 1 |
| 31 | 3792595M1 | 1 | Ring | (1) |
| | | | | Replace and repair. Old interchangeable with new 3902791M1 |
| 32 | 3903004M1 | 1 | Pin | (1) |
| 33 | 3903006M91 | 1 | Pressure Valve | (1) |
| 34 | | | Body Pump | (1) |
| | | | | Not serviced,order REF 1 |

1-AN06-626-C

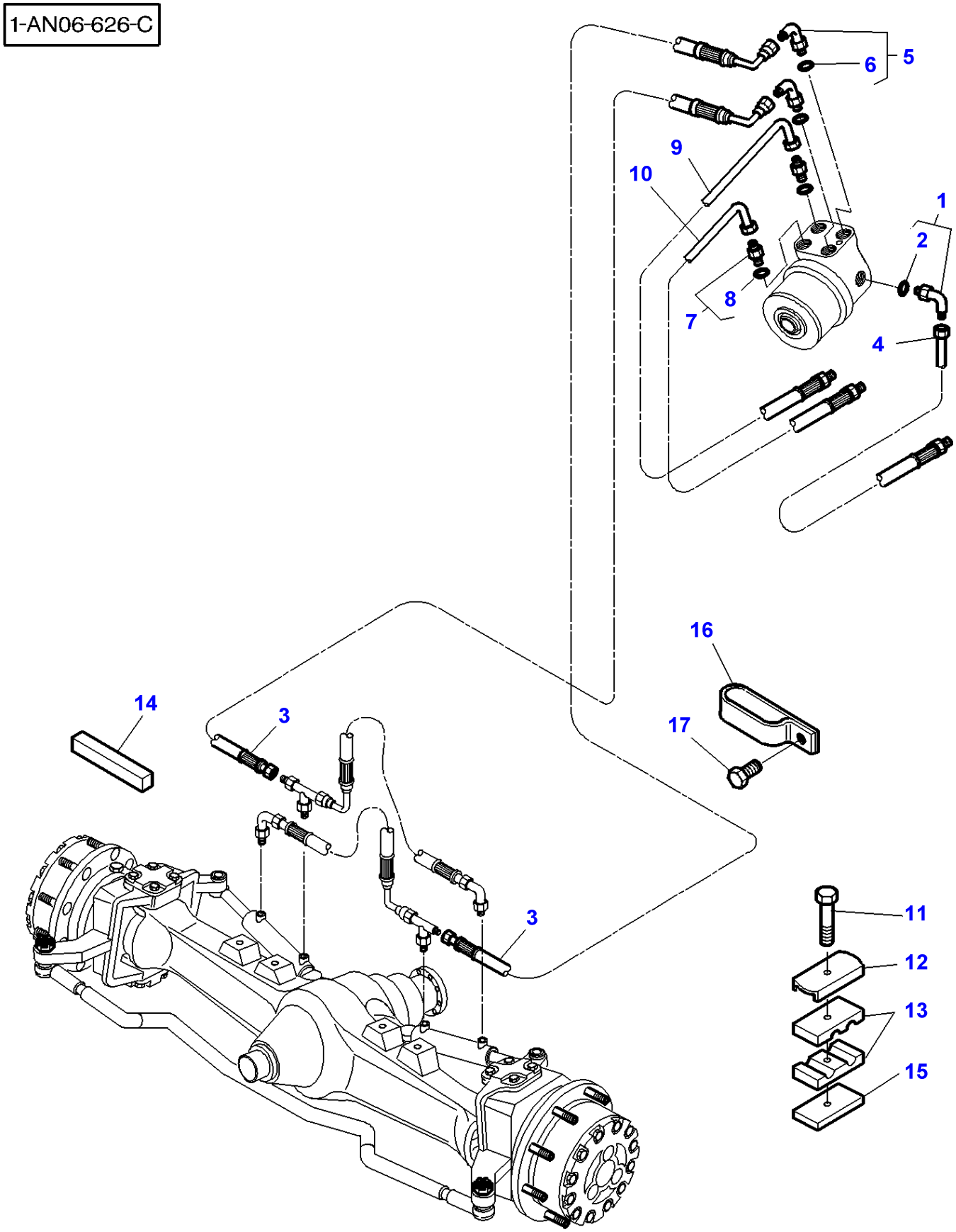

| Item | Part Number | Qty | Description | Comments |
|---|---|---|---|---|
| 1 | 3019410X91 | 1 | Elbow Nipple | M12 |
| 2 | 3019394X1 | 1 | O Ring | (1) |
| 3 | 3778587M1 | 2 | Hydr Hose | Length 3350MM |
| 4 | 3778589M1 | 1 | Tube | |
| 5 | 3019588X91 | 2 | Union | M18 |
| 6 | 3019394X1 | 1 | O Ring | (5) |
| 7 | 3019383X91 | 2 | Adaptor | M18 |
| 8 | 3019397X1 | 1 | O Ring | (7) |
| 9 | 3779448M2 | 1 | Tube | |
| 10 | 3778590M2 | 1 | Tube | |
| 11 | 339168X1 | 2 | Screw | M8X50 |
| | 339368X1 | 1 | Bolt Metric | M8X60 |
| | | | | Up to Serial or Engine Number G245013 |
| 12 | 1626672M2 | 2 | Bridle | |
| 13 | 3040060M1 | 4 | Block | |
| 14 | 3617376M1 | 1 | Gasket | |
| 15 | 3780484M1 | 1 | Spacer | Up to Serial or Engine Number G245013 |
| 16 | 70930748 | 1 | Strap | From Serial or Engine Number G245014 |
| 17 | 339337X1 | 1 | Hex. Sock. Screw | M8X30 |
| | | | | From Serial or Engine Number G245014 |

1-AP60-604-C

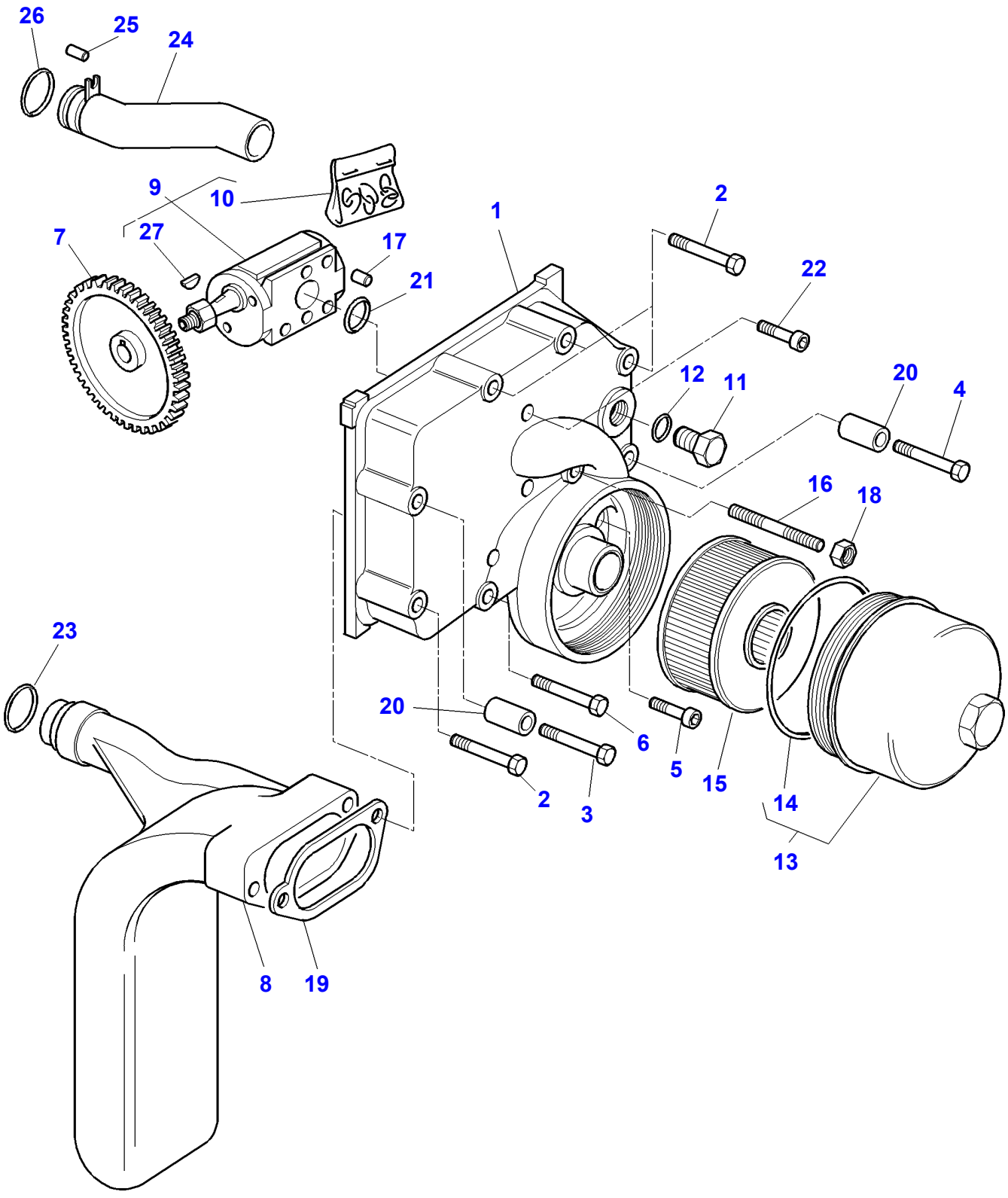

| Item | Part Number | Qty | Description | Comments |
|---|---|---|---|---|
| 1 | 3791328M3 | 1 | Cover | Up to Serial or Engine Number H092010 |
| | 3791328M4 | 1 | Cover | From Serial or Engine Number H092011 |
| 2 | 3009517X1 | 4 | Bolt Metric | M12X100 |
| 3 | 3015344X1 | 1 | Screw | M12X115 |
| | | | | Up to Serial or Engine Number H092010 |
| | 3009517X1 | 1 | Bolt Metric | M12X100 |
| | | | | From Serial or Engine Number H092011 |
| 4 | 1444034X1 | 1 | Screw | M12X125 |
| 5 | 3009300X1 | 1 | Screw | M12X70 |
| 6 | 3009519X1 | 1 | Screw | M12X120 |
| | | | | Up to Serial or Engine Number H092010 |
| | 3009517X1 | 1 | Bolt Metric | M12X100 |
| | | | | From Serial or Engine Number H092011 |
| 7 | 3716351M1 | 1 | Pinion | Number of teeth/spines 70 |
| 8 | 3793088M1 | 1 | Manifold | |
| 9 | 3618001M3 | 1 | Pump | 60CM3/RPM |
| 10 | 3903020M91 | 1 | Kit, Joint | (9) |
| | | | | Replace and repair. Old not interchangeable with new 3900998M91 |
| 11 | 3005645X1 | 1 | Plug | M30 |
| | | | | Up to Serial or Engine Number H092010 |
| | 3019438X1 | 1 | Plug | M30 |
| | | | | From Serial or Engine Number H092011 |
| 12 | 391265X1 | 1 | Gasket | |
| 13 | 3715772M91 | 1 | Cover | |
| 14 | 3715773M1 | 1 | O Ring | (13) |
| 15 | **3714453M1** | 1 | Strainer | |
| 16 | 3010766X1 | 2 | Stud | M8X115 |
| | | | | Up to Serial or Engine Number H092010 |
| | 392531X1 | 2 | Stud | M8X105 |
| | | | | From Serial or Engine Number H092011 |
| 17 | 1442522X1 | 2 | Dowel | Diameter 6X12 |
| 18 | 339169X1 | 2 | Nut | |
| 19 | 3791530M1 | 1 | Gasket | |
| 20 | 3000705X1 | 2 | Pin | Diameter 16X18 |
| 21 | 851150M1 | 1 | Ring | |
| 22 | 3009297X1 | 2 | Screw Metric | M10X90 |
| 23 | 1001489M1 | 1 | O Ring | |
| 24 | 3716375M91 | 1 | Tube | |
| 25 | 1441722X1 | 1 | Pin | Diameter 3X16 |
| 26 | 364777X1 | 1 | O Ring | |
| 27 | 1440360X1 | 1 | Key | (9) |

1-AP60-609-B

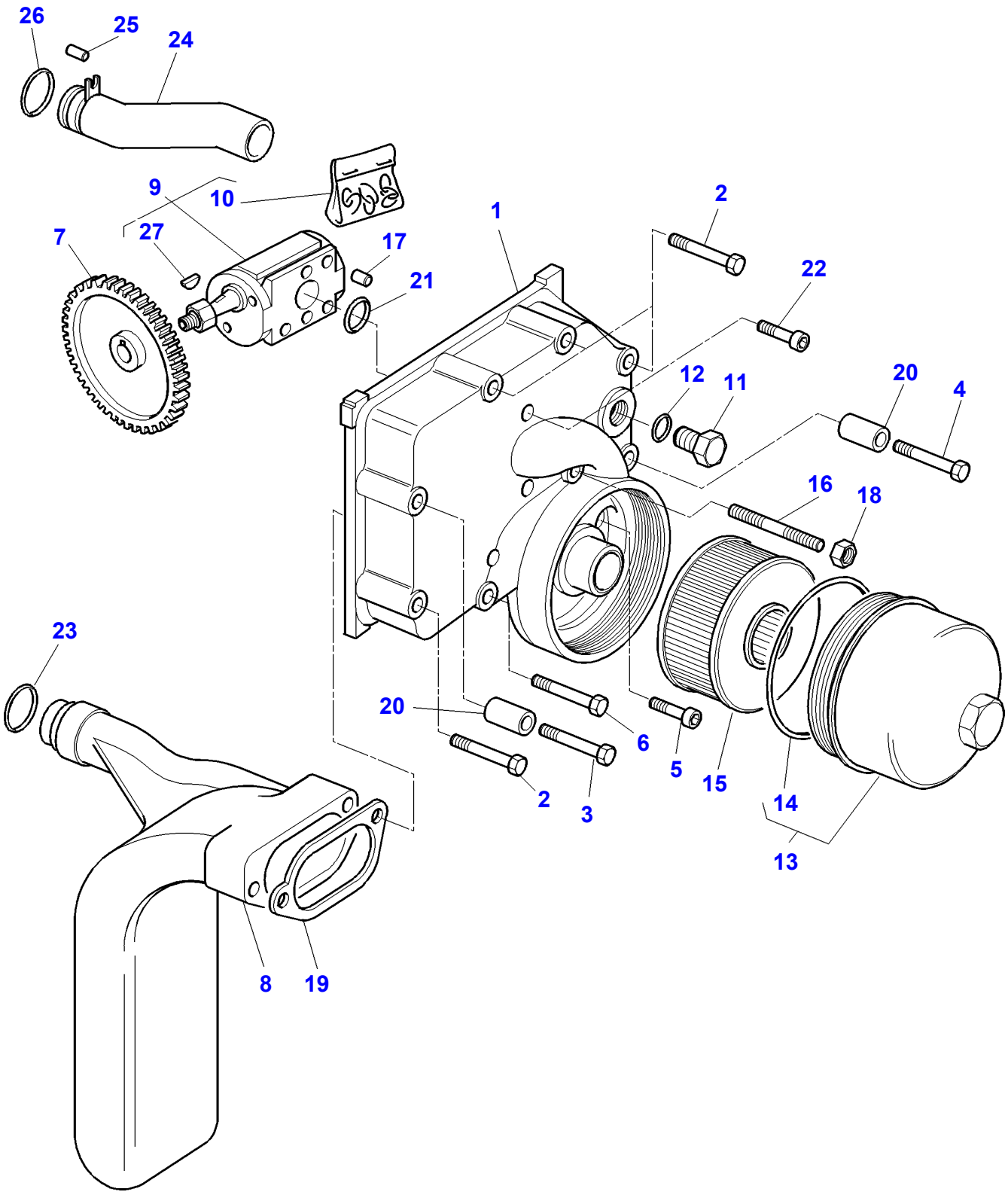

| Item | Part Number | Qty | Description | Comments |
|---|---|---|---|---|
| 1 | 3791328M3 | 1 | Cover | Up to Serial or Engine Number H092010 |
| | 3791328M4 | 1 | Cover | From Serial or Engine Number H092011 |
| 2 | 3009518X1 | 4 | Screw | M12X110 |
| 3 | 3015344X1 | 1 | Screw | M12X115 |
| | | | | Up to Serial or Engine Number H092010 |
| | 3009517X1 | 1 | Bolt Metric | M12X100 |
| | | | | From Serial or Engine Number H092011 |
| 4 | 1444034X1 | 1 | Screw | M12X125 |
| 5 | 3009300X1 | 1 | Screw | M12X70 |
| | | | | From Serial or Engine Number H092011 |
| 6 | 3009519X1 | 1 | Screw | M12X120 |
| | | | | Up to Serial or Engine Number H092010 |
| | 3009517X1 | 1 | Bolt Metric | M12X100 |
| | | | | From Serial or Engine Number H092011 |
| 7 | 3716351M1 | 1 | Pinion | Number of teeth/spines 70 |
| 8 | 3793088M1 | 1 | Manifold | |
| 9 | 3791900M1 | 1 | Pump | 80CM3/RPM |
| 10 | 3903020M91 | 1 | Kit, Joint | (9) |
| 11 | 3005645X1 | 1 | Plug | M30 |
| | | | | Up to Serial or Engine Number H092010 |
| | 3019438X1 | 1 | Plug | M30 |
| | | | | From Serial or Engine Number H092011 |
| 12 | 391265X1 | 1 | Gasket | |
| 13 | 3790001M91 | 1 | Cover | |
| 14 | 3715773M1 | 1 | O Ring | (13) |
| 15 | **3790002M1** | 1 | Strainer | Length 139MM |
| 16 | 3010766X1 | 2 | Stud | M8X115 |
| | | | | From Serial or Engine Number H092011 |
| | 392531X1 | 2 | Stud | M8X105 |
| | | | | From Serial or Engine Number H092011 |
| 17 | 1442522X1 | 2 | Dowel | |
| 18 | 339169X1 | 2 | Nut | |
| 19 | 3791530M1 | 1 | Gasket | |
| 20 | 3000705X1 | 2 | Pin | Diameter 16X18 |
| 21 | 851150M1 | 1 | Ring | |
| 22 | 3009297X1 | 2 | Screw Metric | M10X90 |
| 23 | 1001489M1 | 1 | O Ring | |
| 24 | 3716375M91 | 1 | Tube | |
| 25 | 1441722X1 | 1 | Pin | Diameter 3X16 |
| 26 | 364777X1 | 1 | O Ring | |
| 27 | 1440360X1 | 1 | Key | (9) |

1-AP61-616-C

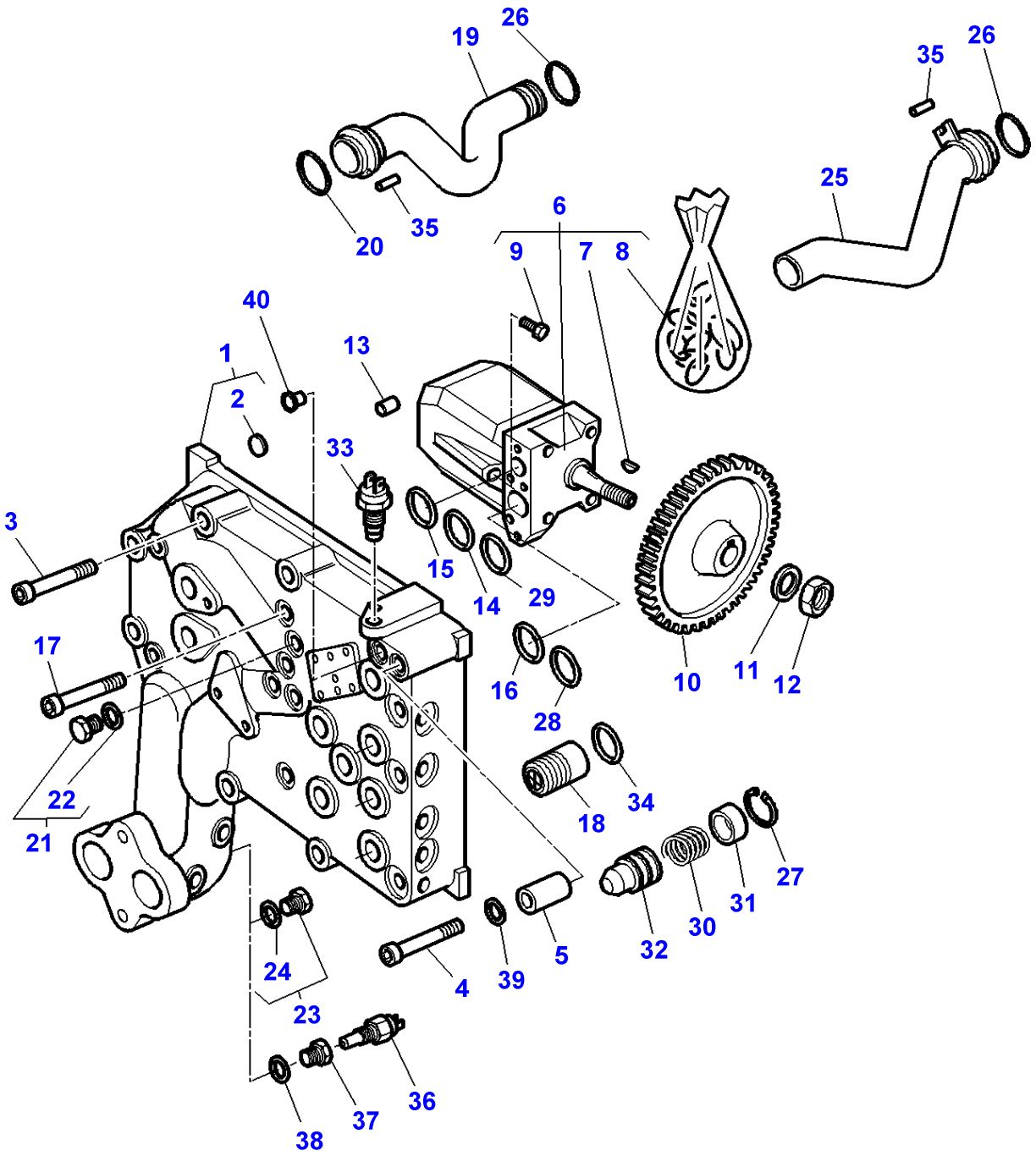
19
26
20
35
35
26
25
6
9
7
8
40
1
2
13
33
3
15
14
29
10
11
12
16
28
17
22
21
18
34
27
31
30
32
5
39
4
24
23
36
37
38

| Item | Part Number | Qty | Description | Comments |
|---|---|---|---|---|
| 1 | 3716703M14 | 1 | Cover | |
| 2 | 391563X1 | 2 | Plug | [B]<br>(1)<br>Diameter 16MM |
| | 391563X1 | 2 | Plug | [A]<br>(1)<br>Up to Serial or Engine Number 10/98<br>Diameter 16MM |
| | 3006020X1 | 2 | Plug | [B]<br>(1)<br>Diameter 20MM |
| | 3006020X1 | 2 | Plug | [A]<br>(1)<br>Up to Serial or Engine Number 10/98 |
| 3 | 3009302X1 | 6 | Screw Metric | M12X90 |
| 4 | 3009303X1 | 2 | Screw | M12X100 |
| 5 | 3000705X1 | 2 | Pin | Diameter 16X18MM |
| 6 | 3716370M2 | 1 | Pump | 45CM3/RPM |
| 7 | 22277X | 1 | Key | (6) |
| 8 | 3902614M91 | 1 | Kit,Joint/Gasket | (6) |
| 9 | 3902662M1 | 1 | Plug | (6) |
| 10 | 3716365M1 | 1 | Pinion | Number of teeth/spines 73 |
| 11 | 353775X1 | 1 | Washer | |
| 12 | 353436X1 | 1 | Nut Unf | |
| 13 | 1442522X1 | 2 | Dowel | Diameter 6X12MM |
| 14 | **1001833M1** | 1 | O Ring | Diameter 6,07X1,78MM |
| 15 | 359299X1 | 1 | O Ring | Diameter 23,4X3,53MM |
| 16 | 378251X1 | 1 | O Ring | Diameter 36,17X2,62MM |
| 17 | 1440354X1 | 4 | Screw Metric | M12X50 |
| 18 | 3715621M92 | 1 | Non Return Valve | 5BARS |
| 19 | 3716376M92 | 1 | Tube | |
| 20 | 3389745M1 | 1 | Gasket | |
| 21 | 3019639X91 | 1 | Plug | M14 |
| 22 | 3019395X1 | 1 | O Ring | (21) |
| 23 | 3019645X91 | 1 | Plug | [B]<br>M22 |
| 24 | 3019398X1 | 2 | O Ring | (23) |
| 25 | 3716377M91 | 1 | Tube | |
| 26 | 364777X1 | 2 | O Ring | |
| 27 | 1441785X1 | 1 | Clip | |
| 28 | **1007240M1** | 2 | O Ring | Diameter 9,2X2,62MM |
| 29 | 195562M1 | 1 | O Ring | Diameter 10,77X2,62MM |
| 30 | 3715619M1 | 1 | Spring | |
| 31 | 3715618M1 | 1 | Cup | |
| 32 | 3715616M1 | 1 | Non Return Valve | 22BARS |
| 33 | **3381387M4** | 1 | Low Pr.Oil Trmtr | |
| 34 | 359300X1 | 1 | O Ring | |
| 35 | 1441722X1 | 2 | Pin | Diameter 3X16MM |
| 36 | | 1 | Thermocontact | [B,C] |
| 37 | | 1 | Adaptor | [B,C] |
| 38 | | 1 | O Ring | [B,C] |
| 39 | 3792365M1 | 1 | Washer | From Serial or Engine Number G281016 |
| 40 | 3792347M1 | 1 | Plug | Diameter 14MM<br>From Serial or Engine Number 10/98 |
| | 3792314M1 | 1 | Plug | Diameter 15MM<br>From Serial or Engine Number 10/98 |

**FOOTNOTE [A]** WITH DYNASHIFT
**FOOTNOTE [B]** WITH FULL POWERSHIFT
**FOOTNOTE [C]** NOT USED

1-AP61-637-C

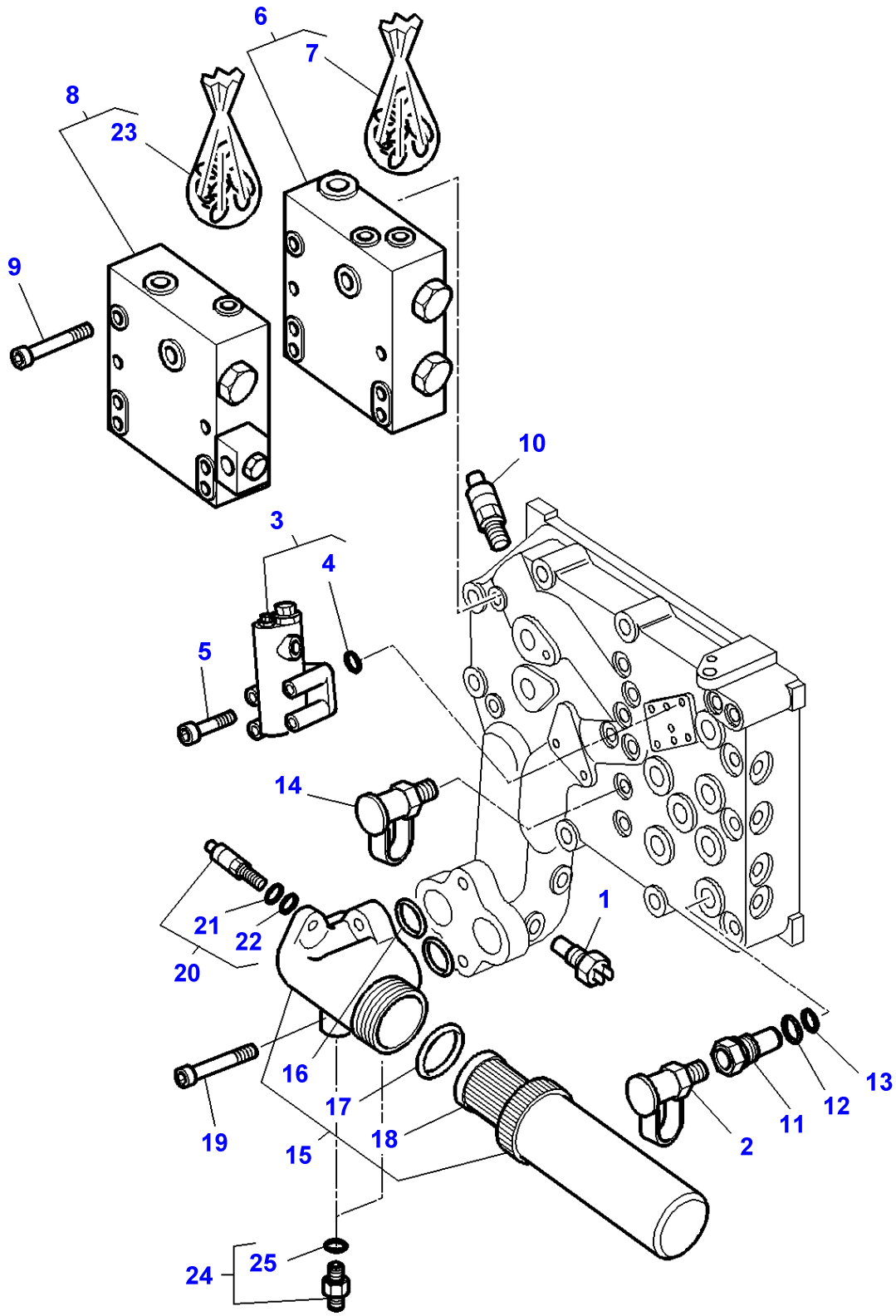

| Item | Part Number | Qty | Description | Comments |
|---|---|---|---|---|
| 1 | **3712668M2** | 1 | Switch,Indirect | |
| 2 | **3384387M1** | 1 | Pressure Intake | |
| 3 | 3716371M1 | 1 | Adjuster | |
| 4 | 359291X1 | 3 | O Ring | (3) |
| 5 | 3009283X1 | 4 | Screw | M6X30 |
| 6 | 3790025M1 | 1 | Safety Valve | [A] |
| 7 | 3790027M11 | 1 | Kit, Joint | (6) |
| 8 | 3790036M1 | 1 | Safety Valve | [B] |
| 9 | 3015017X1 | 4 | Screw | M8X135 |
| 10 | 3716357M1 | 1 | Restrictor | |
| 11 | 3716195M1 | 1 | Plug | |
| 12 | 831497M1 | 1 | O Ring | Diameter 16,36X2,21MM |
| 13 | 70923841 | 1 | O Ring | Diameter 12,42X1,78MM |
| 14 | **3384387M1** | 2 | Pressure Intake | |
| 15 | 3791109M1 | 1 | Filter | [C] |
| | 3791109M1 | 1 | Filter | [D]<br>Up to Serial or Engine Number H097013 |
| | 3792618M1 | | Filter | [D]<br>From Serial or Engine Number H097014 |
| 16 | 831196M1 | 2 | O Ring | (15) |
| 17 | **842332M1** | 1 | Gasket | (15) |
| 18 | **3618662M1** | 1 | Filter Insert | (15) |
| 19 | 3000258X1 | 1 | Screw Metric | [C]<br>M10X40 |
| | 3000258X1 | 2 | Screw Metric | [D]<br>M10X40<br>Up to Serial or Engine Number H097013 |
| | 1440351X1 | 2 | Screw Metric | [D]<br>M10X35<br>From Serial or Engine Number H097014 |
| 20 | **3618663M3** | 1 | Indicator | |
| 21 | 831497M1 | 1 | O Ring | (20)<br>Diameter 16,4X2,2 |
| 22 | 70923841 | 1 | O Ring | (20)<br>Diameter 12,4X1,8 |
| 23 | 3902094M91 | 1 | Kit, Joint | (8) |
| 24 | 3019389X91 | 2 | Union | [D]<br>From Serial or Engine Number H097014 |
| 25 | 3019398X1 | 1 | O Ring | (24) |

**FOOTNOTE [A]** STEERING
**FOOTNOTE [B]** BRAKING
**FOOTNOTE [C]** WITH FULL POWERSHIFT
**FOOTNOTE [D]** WITH DYNASHIFT

1-AP61-636-B

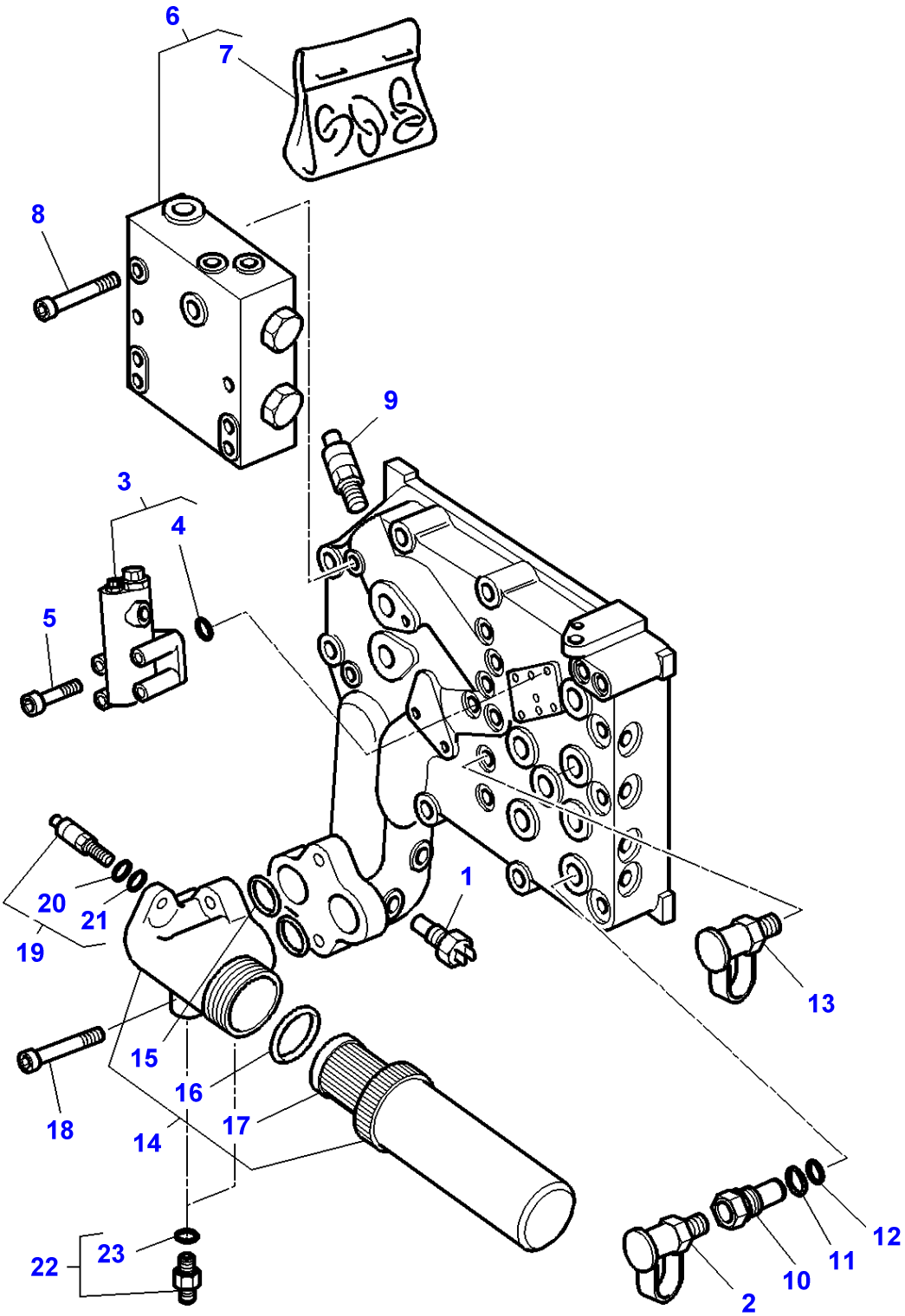

| Item | Part Number | Qty | Description | Comments |
|---|---|---|---|---|
| 1 | **3712668M2** | 1 | Switch,Indirect | |
| 2 | **3384387M1** | 1 | Pressure Intake | |
| 3 | 3716371M1 | 1 | Adjuster | |
| 4 | 359291X1 | 3 | O Ring | (3) |
| 5 | 3009283X1 | 4 | Screw | M6X30 |
| 6 | 3716355M1 | 1 | Safety Valve | |
| 7 | 3790027M11 | 1 | Kit, Joint | (6) |
| 8 | 1441946X1 | 4 | Screw | M8X75 |
| 9 | 3716357M1 | 1 | Restrictor | |
| 10 | 3716195M1 | 1 | Plug | |
| 11 | 831497M1 | 1 | O Ring | Diameter 16,36X2,21MM |
| 12 | 70923841 | 1 | O Ring | Diameter 12,42X1,78MM |
| 13 | **3384387M1** | 2 | Pressure Intake | |
| 14 | 3791109M1 | 1 | Filter | [A] |
| | 3791109M1 | 1 | Filter | [B]<br>Up to Serial or Engine Number H097013 |
| | 3792618M1 | 1 | Filter | [B]<br>From Serial or Engine Number H097014 |
| 15 | 831196M1 | 2 | O Ring | (14) |
| 16 | **842332M1** | 1 | Gasket | (14) |
| 17 | **3618662M1** | 1 | Filter Insert | (14) |
| 18 | 3000258X1 | 2 | Screw Metric | [A]<br>M10X40 |
| | 3000258X1 | 2 | Screw Metric | [B]<br>M10X40<br>Up to Serial or Engine Number H097013 |
| | 1440351X1 | 2 | Screw Metric | [B]<br>M10X35<br>From Serial or Engine Number H097014 |
| 19 | **3618663M3** | 1 | Indicator | |
| 20 | 831497M1 | 1 | O Ring | (19)<br>Diameter 16,4X2,2 |
| 21 | 70923841 | 1 | O Ring | (19)<br>Diameter 12,4X1,8 |
| 22 | 3019389X91 | 2 | Union | [B]<br>From Serial or Engine Number H097014 |
| 23 | 3019398X1 | 1 | O Ring | (22) |

**FOOTNOTE [A]** WITH FULL POWERSHIFT
**FOOTNOTE [B]** WITH DYNASHIFT

1-AP61-639-B

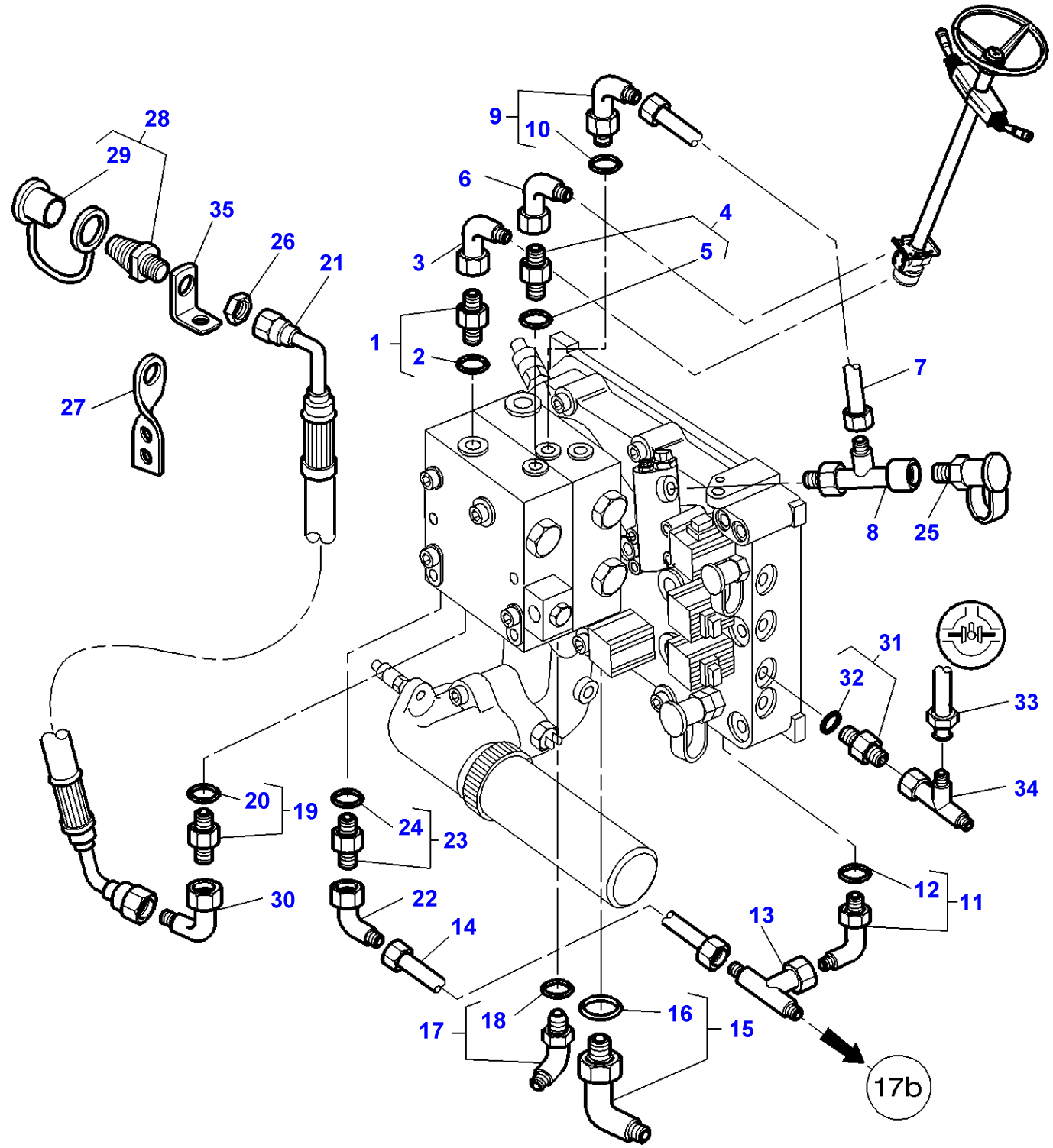
28
29
35
26
21
27
9
10
6
3
4
5
1
2
7
8
25
31
32
33
34
20
19
24
23
30
22
14
12
11
13
17
18
16
15
17b

| Item | Part Number | Qty | Description | Comments |
|---|---|---|---|---|
| 1 | 3019658X91 | 1 | Union | M22 |
| 2 | 3019398X1 | 1 | O Ring | (1) |
| 3 | 365233X1 | 1 | Elbow | |
| 4 | 3019379X91 | 1 | Union | M14 |
| 5 | 3019395X1 | 1 | O Ring | (4) |
| 6 | 364603X1 | 1 | Elbow | 9/16" |
| 7 | 3790074M91 | 1 | Tube | |
| 8 | 3712689M1 | 1 | Union | |
| 9 | 3019694X91 | 1 | Union | M14 |
| 10 | 3019395X1 | 1 | O Ring | (9) |
| 11 | 3019416X91 | 1 | Elbow | M18 |
| 12 | 3019397X1 | 1 | O Ring | (11) |
| 13 | 367261X1 | 1 | Union | 7/8" |
| 14 | 3716780M92 | 1 | Tube | |
| 15 | 3019422X91 | 1 | Union | |
| 16 | 3019399X1 | 1 | O Ring | (15)<br>M33 |
| 17 | 3019584X91 | 1 | Union | M14 |
| 18 | 3019395X1 | 1 | O Ring | (17) |
| 19 | 3019658X91 | 1 | Union | M22 |
| 20 | 3019398X1 | 1 | O Ring | (19) |
| 21 | 3791611M1 | 1 | Hydr Hose | |
| 22 | 70921325 | 1 | Elbow Nipple | 7/8" |
| 23 | 3019387X91 | 1 | Union | M22 |
| 24 | 3019398X1 | 1 | O Ring | (23) |
| 25 | 3712707M1 | 1 | Intake | |
| 26 | 1442336X1 | 1 | Nut | |
| 27 | 3791579M2 | 1 | Support | Up to Serial or Engine Number H097013 |
| 28 | **3581307M2** | 1 | Pressure Valve | |
| 29 | 3616259M1 | 1 | Plug | (28) |
| 30 | 365233X1 | 1 | Elbow | |
| 31 | 3019700X91 | 1 | Union | 3/4"/M14 |
| 32 | 3019394X1 | 1 | O Ring | (31) |
| 33 | 3791202M91 | 1 | Tube | |
| 34 | 364735X1 | 1 | Union | 3/4" |
| 35 | 3792736M1 | 1 | Support | From Serial or Engine Number H097014 |

1-AP61-638-B

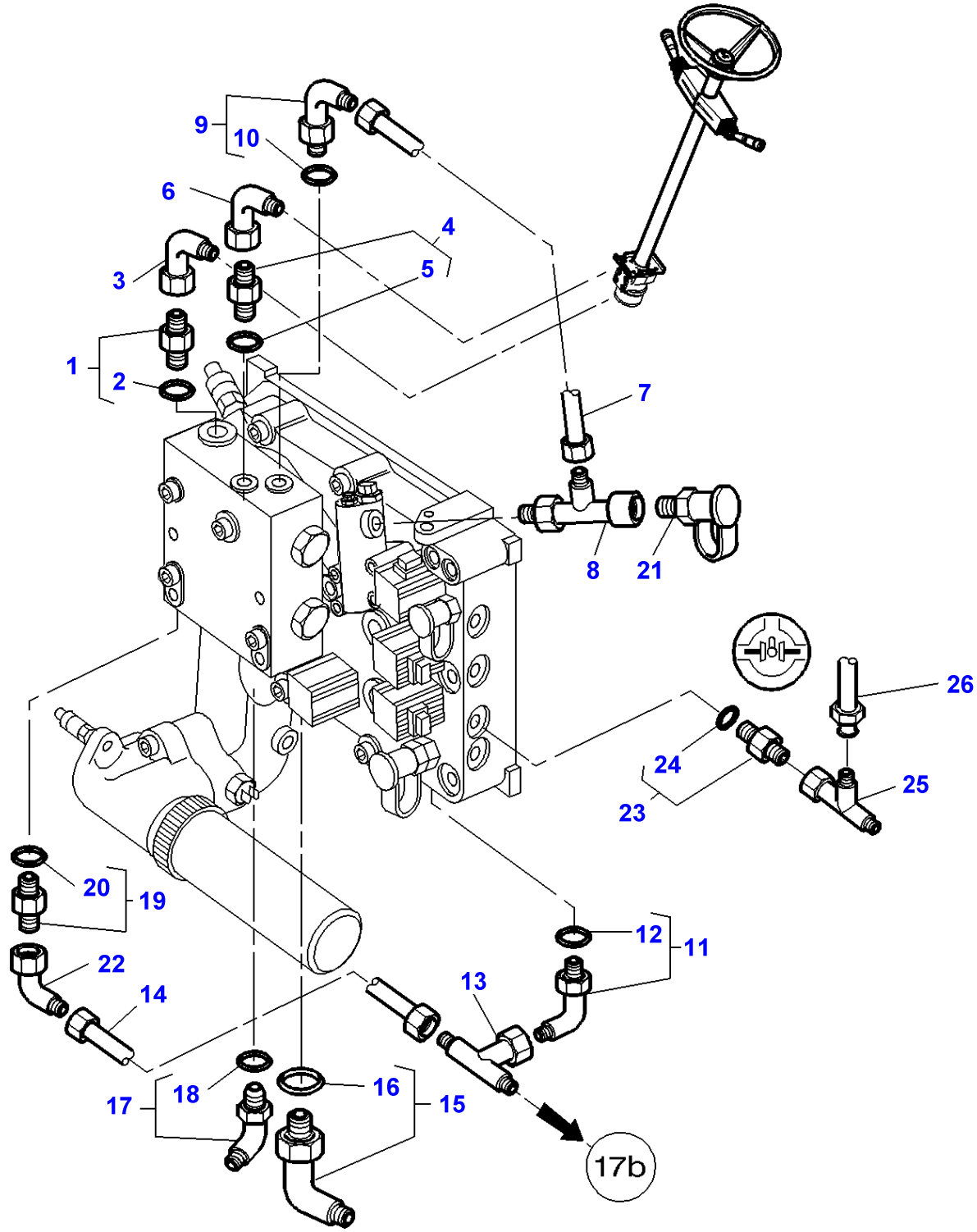

| Item | Part Number | Qty | Description | Comments |
|---|---|---|---|---|
| 1 | 3019658X91 | 1 | Union | M22 |
| 2 | 3019398X1 | 1 | O Ring | (1) |
| 3 | 365233X1 | 1 | Elbow | |
| 4 | 3019379X91 | 1 | Union | M14 |
| 5 | 3019395X1 | 1 | O Ring | (4) |
| 6 | 364603X1 | 1 | Elbow | 9/16" |
| 7 | 3790074M91 | 1 | Tube | |
| 8 | 3712689M1 | 1 | Union | |
| 9 | 3019694X91 | 1 | Union | M14 |
| 10 | 3019395X1 | 1 | O Ring | (9) |
| 11 | 3019416X91 | 1 | Elbow | M18 |
| 12 | 3019397X1 | 1 | O Ring | (11) |
| 13 | 367261X1 | 1 | Union | 7/8" |
| 14 | 3716780M92 | 1 | Tube | |
| 15 | 3019422X91 | 1 | Union | |
| 16 | 3019399X1 | 1 | O Ring | (15)<br>M33 |
| 17 | 3019584X91 | 1 | Union | M14 |
| 18 | 3019395X1 | 1 | O Ring | (17) |
| 19 | 3019387X91 | 1 | Union | M22 |
| 20 | 3019398X1 | 1 | O Ring | (19) |
| 21 | 3712707M1 | 1 | Intake | |
| 22 | 70921325 | 1 | Elbow Nipple | 7/8" |
| 23 | 3019700X91 | 1 | Union | 3/4"/M14 |
| 24 | 3019394X1 | 1 | O Ring | (23) |
| 25 | 364735X1 | 1 | Union | Four Wheel Drive<br>3/4" |
| 26 | 3791202M91 | 1 | Tube | |

1-AP61-647-A

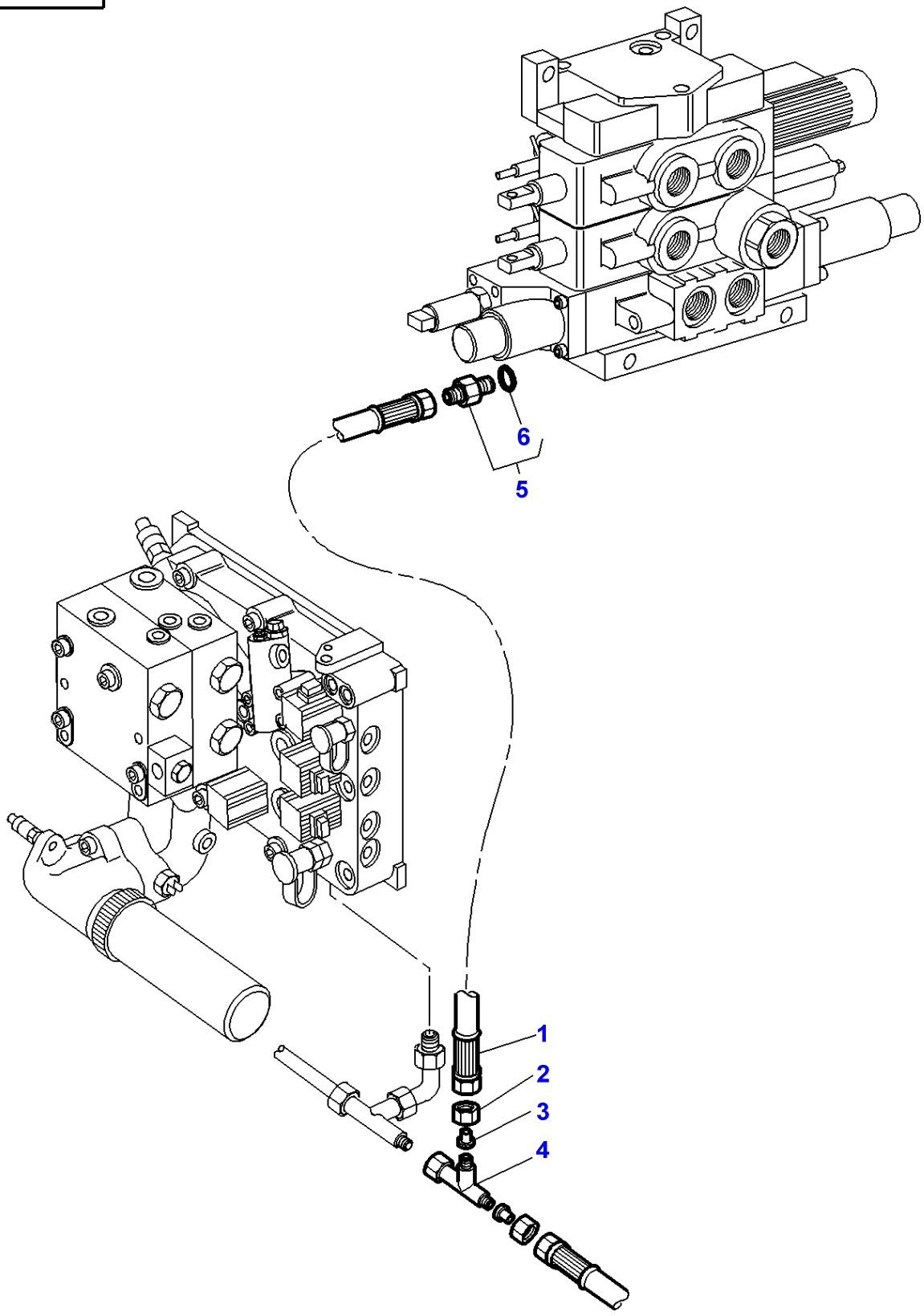

| Item | Part Number | Qty | Description | Comments |
|---|---|---|---|---|
| 1 | 3716399M1 | 1 | Hydr Hose | |
| 2 | 22576X | 1 | Union Nut | |
| 3 | 356629X1 | 1 | Reducer | |
| 4 | 377218X1 | 1 | Teepiece | |
| 5 | 3019660X91 | 1 | Union | |
| 6 | 3019393X1 | 1 | O Ring | (5) |

1-AP31-607-C

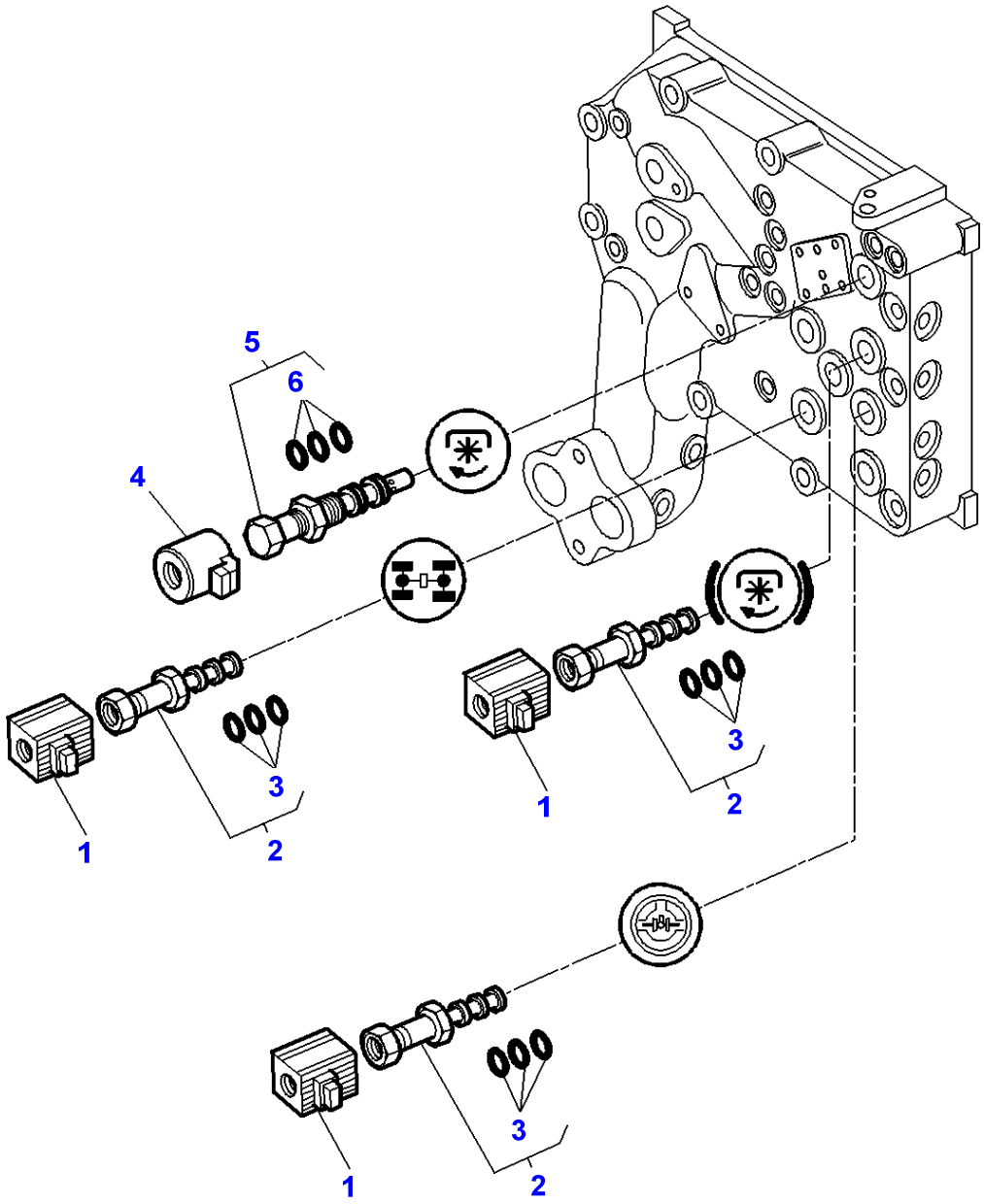

| Item | Part Number | Qty | Description | Comments |
|---|---|---|---|---|
| 1 | **3619763M1** | 3 | Solenoid | |
| 2 | **3619762M1** | 3 | Spool | |
| 3 | 3900994M91 | X | Kit, Joint | (2) |
| 4 | 3791412M1 | 1 | Solenoid | |
| 5 | **3791413M1** | 1 | Spool | |
| 6 | **3902774M91** | 1 | Kit, Joint | (5) |

1-AP31-609-B

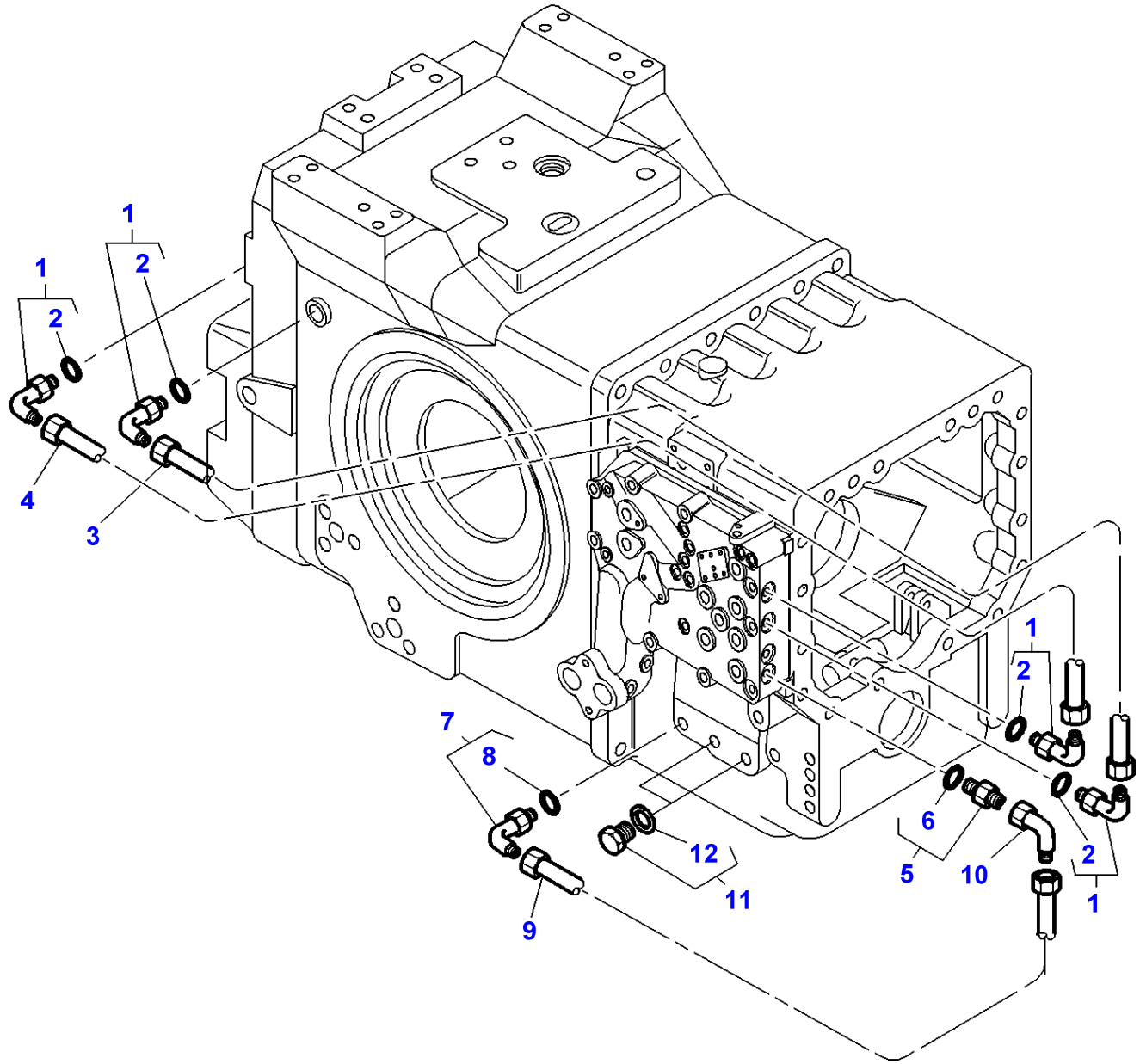

| Item | Part Number | Qty | Description | Comments |
|---|---|---|---|---|
| 1 | 3019412X91 | 4 | Elbow | |
| 2 | 3019395X1 | 1 | O Ring | (1) |
| 3 | 3791375M91 | 1 | Tube | |
| 4 | 3791376M91 | 1 | Tube | |
| 5 | 3019700X91 | 1 | Union | |
| 6 | 3019394X1 | 1 | O Ring | (5) |
| 7 | 3385713M91 | 1 | Union | |
| 8 | 831497M1 | 1 | O Ring | (7) |
| 9 | 3791419M91 | 1 | Tube | |
| 10 | 365233X1 | 1 | Elbow | |
| 11 | 3019645X91 | 2 | Plug | M22X1,5 |
| 12 | 3019398X1 | 1 | O Ring | (11) |

1-AP31-611-B

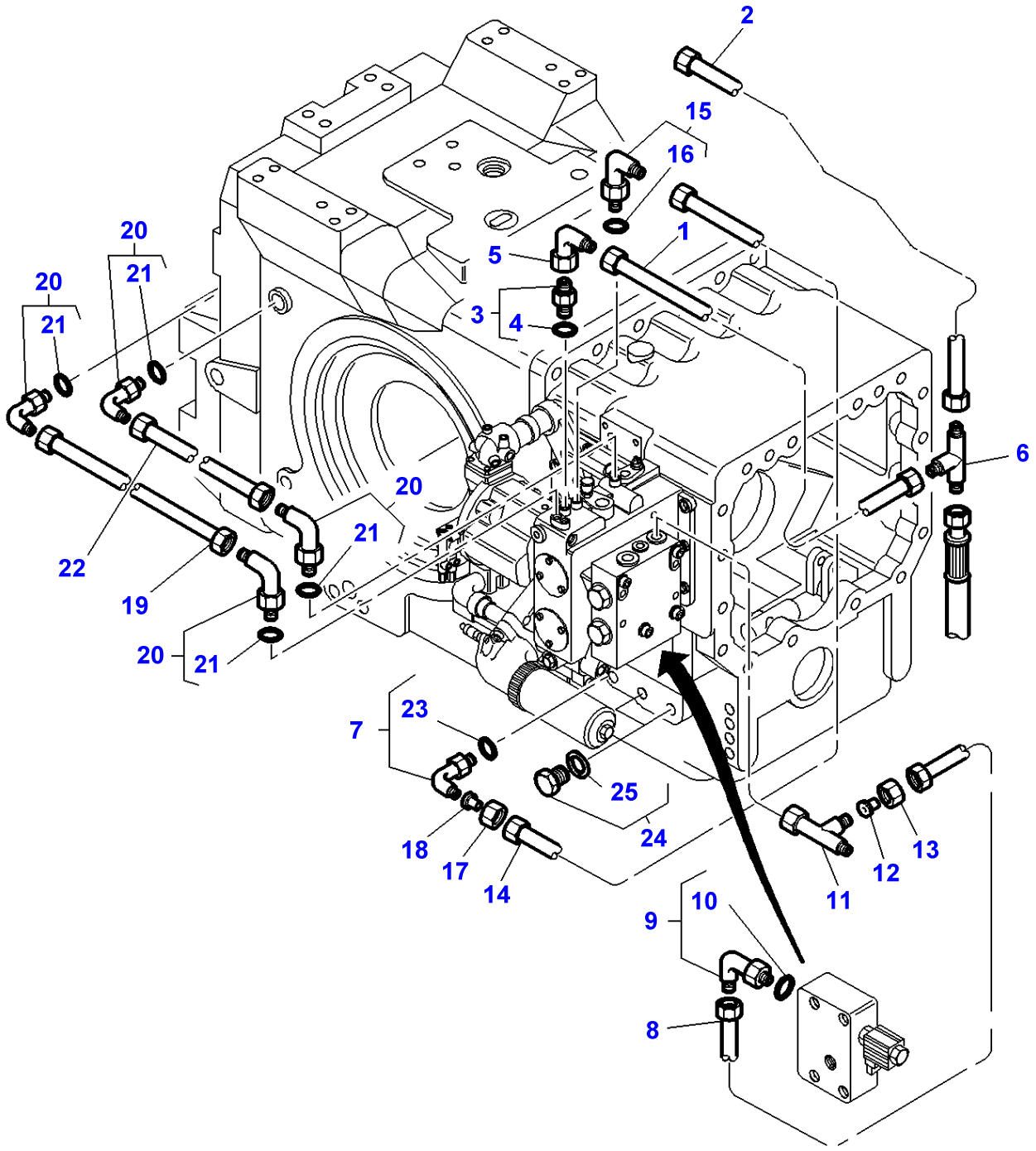
2
15
16
1
5
3
4
20
21
20
21
20
21
22
19
20
21
6
7
23
25
24
18
17
14
13
12
11
10
9
8

| Item | Part Number | Qty | Description | Comments |
|---|---|---|---|---|
| 1 | 3791713M1 | 1 | Tube | |
| 2 | 3791714M1 | 1 | Tube | |
| 3 | 3019381X91 | 1 | Union | Diameter M16X3/4 |
| 4 | 3019396X1 | 1 | O Ring | (3) |
| 5 | 365233X1 | 1 | Elbow | Diameter 3/4-16 |
| 6 | 356560X1 | 1 | Teepiece | Diameter 3/4-16 |
| 7 | 3385713M91 | 1 | Union | |
| 8 | 3791718M1 | 1 | Tube | |
| 9 | 3019412X91 | 1 | Elbow | Diameter M14 |
| 10 | 3019395X1 | 1 | O Ring | (9) |
| 11 | 364735X1 | 1 | Union | Diameter 3/4-16 |
| 12 | 380003X1 | 1 | Union | Diameter 1/2-20 /12X8 |
| 13 | 338773X1 | 1 | Olive | |
| 14 | 3791717M1 | 1 | Tube | |
| 15 | 3019412X91 | 1 | Elbow | Diameter M14 |
| 16 | 3019395X1 | 1 | O Ring | (15) |
| 17 | 195960M1 | 1 | Nut | Diameter 3/4 |
| 18 | 356627X1 | 1 | Adaptor | Diameter 9/16-18 /12X10 |
| 19 | 3791715M1 | 1 | Tube | |
| 20 | 3019412X91 | 4 | Elbow | |
| 21 | 3019395X1 | 1 | O Ring | (20) |
| 22 | 3791712M1 | 1 | Tube | |
| 23 | 831497M1 | 1 | O Ring | (7) |
| 24 | 3019645X91 | 2 | Plug | M22X1,5 |
| 25 | 3019398X1 | 1 | O Ring | (24) |

1-AP61-640-A

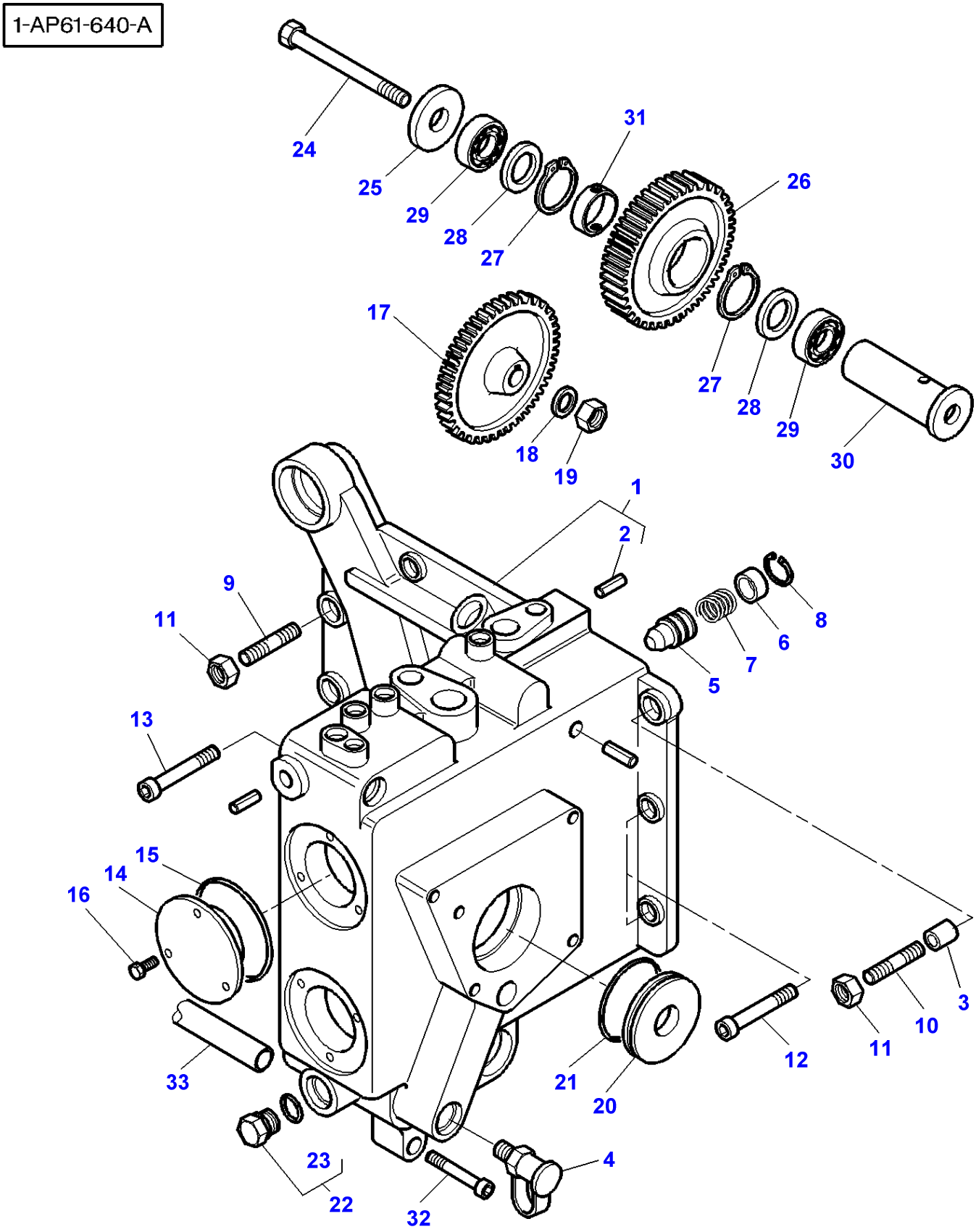
24
25
29
28
27
31
26
27
28
29
30
17
18
19
1
2
9
11
13
15
14
16
33
23
22
32
4
21
20
12
11
10
3
8
6
7
5

| Item | Part Number | Qty | Description | Comments |
|---|---|---|---|---|
| 1 | 3716732M11 | 1 | Cover | |
| 2 | 3712249M1 | 3 | Plug | (1) |
| 3 | 3000705X1 | 2 | Pin | Diameter 16X18 |
| 4 | **3384387M1** | 1 | Pressure Intake | |
| 5 | 3715616M1 | 1 | Non Return Valve | 22 BARS |
| 6 | 3715618M1 | 1 | Cup | |
| 7 | 3715619M1 | 1 | Spring | |
| 8 | 1441785X1 | 1 | Clip | |
| 9 | 3019897X1 | 2 | Stud | M12X32 |
| 10 | 1440029X1 | 2 | Stud | M12X38 |
| 11 | 3009695X1 | 4 | Nut | |
| 12 | 1440356X1 | 3 | Screw Metric | M12X30 |
| 13 | 3009301X1 | 1 | Screw Metric | M12X80 |
| 14 | 3716746M1 | 2 | Cover | |
| 15 | 3019920X1 | 2 | O Ring | |
| 16 | 339560X1 | 6 | Hex. Sock. Screw | M6X16 |
| 17 | 3791889M1 | 1 | Pinion | Number of teeth/spines 77 |
| 18 | 11298X | 1 | Washer | |
| 19 | 355647X1 | 1 | Nut Unf | M12 |
| 20 | 3716747M1 | 1 | Cover | |
| 21 | 3580247M1 | 1 | O Ring | |
| 22 | 3019645X91 | 1 | Plug | |
| 23 | 3019398X1 | 1 | O Ring | (22) |
| 24 | 3010448X1 | 1 | Screw | M12X140 |
| 25 | 3618971M2 | 1 | Washer | |
| 26 | 3716735M1 | 1 | Pinion | Number of teeth/spines 80 |
| 27 | 1440480X1 | 2 | Circlip | |
| 28 | 3716741M1 | X | Chock | Thickness 0,1MM |
| | 3716742M1 | X | Chock | Thickness 0,2MM |
| | 3716743M1 | X | Chock | Thickness 0,5MM |
| 29 | 339481X1 | 2 | Bearing Taper | |
| 30 | 3716738M1 | 1 | Clevis Pin | |
| 31 | 3716739M1 | 1 | Spacer | |
| 32 | 1440352X1 | 2 | Bolt | M10X60 |
| 33 | 3791844M1 | 1 | Draglink | |

1-AP61-648-A

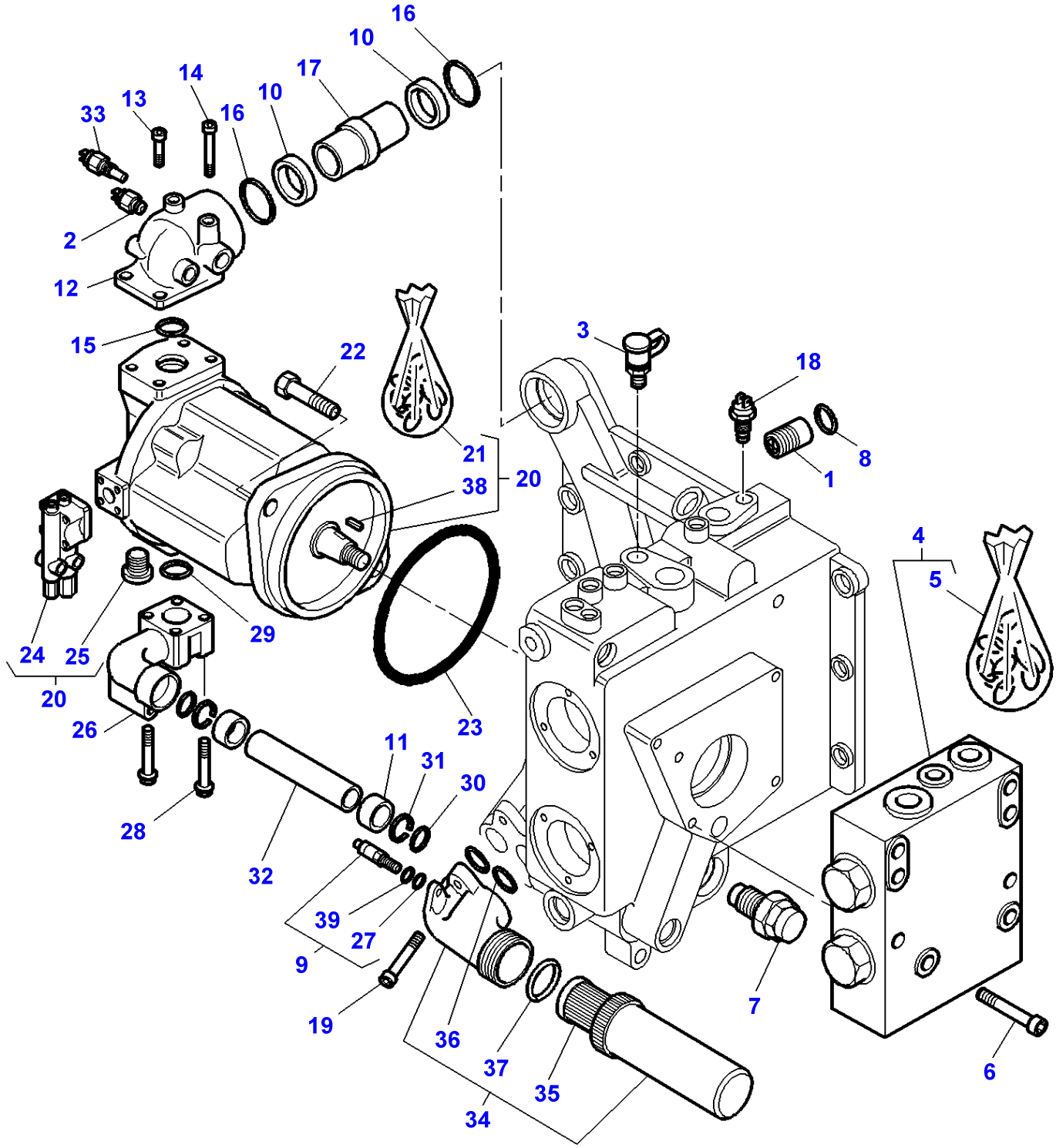
16
10
17
14
13
33
10
16
2
12
15
22
21
20
38
3
18
8
1
4
5
24
25
20
29
23
26
11
31
30
28
32
39
27
9
19
36
37
35
34
7
6

| Item | Part Number | Qty | Description | Comments |
|---|---|---|---|---|
| 1 | 3792040M91 | 1 | Non Return Valve | 5 BARS |
| 2 | **3712668M2** | 1 | Switch,Indirect | |
| 3 | **3384387M1** | 1 | Pressure Intake | |
| 4 | 3716355M1 | 1 | Safety Valve | |
| 5 | 3790027M11 | 1 | Kit, Joint | (4) |
| 6 | 1441946X1 | 4 | Screw | M8X75 |
| 7 | 3716357M1 | 1 | Restrictor | |
| 8 | 359300X1 | 1 | O Ring | |
| 9 | **3618663M3** | 1 | Indicator | |
| 10 | 3716748M1 | 2 | Gasket | |
| 11 | 3790863M1 | 2 | Gasket | |
| 12 | 3716737M2 | 1 | Manifold | |
| 13 | 3009299X1 | 2 | Screw Metric | M12X25 |
| 14 | 3009300X1 | 2 | Screw | M12X70 |
| 15 | 835130M1 | 1 | O Ring | |
| 16 | 370087X1 | 2 | O Ring | |
| 17 | 3716744M1 | 1 | Tube | |
| 18 | **3381387M4** | 1 | Low Pr.Oil Trmtr | |
| 19 | 3000258X1 | 2 | Screw Metric | M10X40 |
| 20 | 3790900M1 | 1 | Pump | 60CM3/RPM |
| 21 | 3903018M91 | 1 | Kit, Joint | (20) |
| 22 | 390419X1 | 2 | Hex. Sock. Screw | M16X40 |
| 23 | 70923591 | 1 | O Ring | |
| 24 | 3903022M1 | 1 | Adjuster | (20) |
| 25 | 3903019M1 | 1 | Plug | (20) |
| 26 | 3791912M1 | 1 | Manifold | |
| 27 | 70923841 | 1 | O Ring | (9)<br>Diameter 12,4X1,8 |
| 28 | 3811722M1 | 4 | Bolt | M10X70 |
| 29 | 359306X1 | 1 | O Ring | |
| 30 | 3010827X1 | 2 | O Ring | |
| 31 | 3010709X1 | 2 | Bush | |
| 32 | 3716745M1 | 1 | Tube | |
| 33 | **3790121M1** | 1 | Thermocontact | Up to Serial or Engine Number 09/99 |
| 34 | 3618661M1 | 1 | Filter | |
| 35 | **3618662M1** | 1 | Filter Insert | (34) |
| 36 | **842332M1** | 1 | Gasket | (34) |
| 37 | 831196M1 | 2 | O Ring | (34) |
| 38 | 3903021M1 | 1 | Key | (20) |
| 39 | 831497M1 | 1 | O Ring | (9)<br>Diameter 16,4X2,2 |

1-AP61-649-A

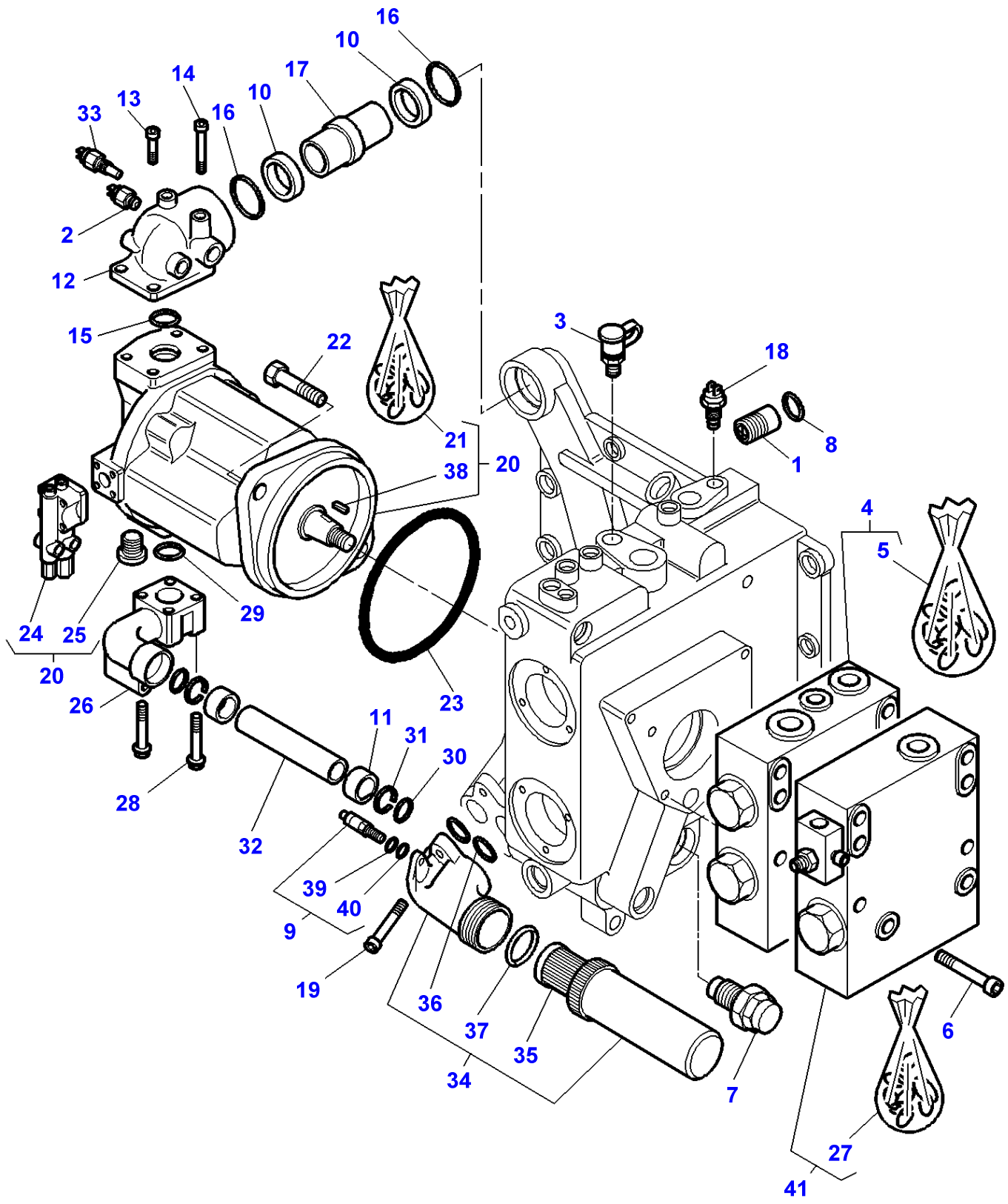
16
10
17
14
13
33
16
10
2
12
15
22
21
20
38
3
18
8
1
4
5
24
25
20
29
23
26
11
31
30
28
32
39
40
9
19
36
37
35
34
7
6
27
41

| Item | Part Number | Qty | Description | Comments |
|---|---|---|---|---|
| 1 | 3792040M91 | 1 | Non Return Valve | 5 BARS |
| 2 | **3712668M2** | 1 | Switch,Indirect | |
| 3 | **3384387M1** | 1 | Pressure Intake | |
| 4 | 3790025M1 | 1 | Safety Valve | [B] |
| 5 | 3790027M11 | 1 | Kit, Joint | (4) |
| 6 | 3015017X1 | 4 | Screw | M8X135 |
| 7 | 3716357M1 | 1 | Restrictor | |
| 8 | 359300X1 | 1 | O Ring | |
| 9 | **3618663M3** | 1 | Indicator | |
| 10 | 3716748M1 | 2 | Gasket | |
| 11 | 3790863M1 | 2 | Gasket | |
| 12 | 3716737M2 | 1 | Manifold | |
| 13 | 3009299X1 | 2 | Screw Metric | M12X25 |
| 14 | 3009300X1 | 2 | Screw | M12X70 |
| 15 | 835130M1 | 1 | O Ring | |
| 16 | 370087X1 | 2 | O Ring | |
| 17 | 3716744M1 | 1 | Tube | |
| 18 | **3381387M4** | 1 | Low Pr.Oil Trmtr | |
| 19 | 3000258X1 | 2 | Screw Metric | M10X40 |
| 20 | 3790900M1 | 1 | Pump | 60CM3/RPM |
| 21 | 3903018M91 | 1 | Kit, Joint | (20) |
| 22 | 390419X1 | 2 | Hex. Sock. Screw | M16X40 |
| 23 | 70923591 | 1 | O Ring | |
| 24 | 3903022M1 | 1 | Adjuster | (20) |
| 25 | 3903019M1 | 1 | Plug | (20) |
| 26 | 3791912M1 | 1 | Manifold | |
| 27 | 3902094M91 | 1 | Kit, Joint | (41) |
| 28 | 3811722M1 | 4 | Bolt | M10X70 |
| 29 | 359306X1 | 1 | O Ring | |
| 30 | 3010827X1 | 2 | O Ring | |
| 31 | 3010709X1 | 2 | Bush | |
| 32 | 3716745M1 | 1 | Tube | |
| 33 | **3790121M1** | 1 | Thermocontact | Up to Serial or Engine Number 09/99 |
| 34 | 3618661M1 | 1 | Filter | |
| 35 | **3618662M1** | 1 | Filter Insert | (34) |
| 36 | **842332M1** | 1 | Gasket | (34) |
| 37 | 831196M1 | 2 | O Ring | (34) |
| 38 | 3903021M1 | 1 | Key | (20) |
| 39 | 831497M1 | 1 | O Ring | (9) Diameter 16,4X2,2 |
| 40 | 70923841 | 1 | O Ring | (9) Diameter 12,4X1,8 |
| 41 | 3790036M1 | 1 | Safety Valve | [C] |

**FOOTNOTE [B]** STEERING
**FOOTNOTE [C]** BRAKING

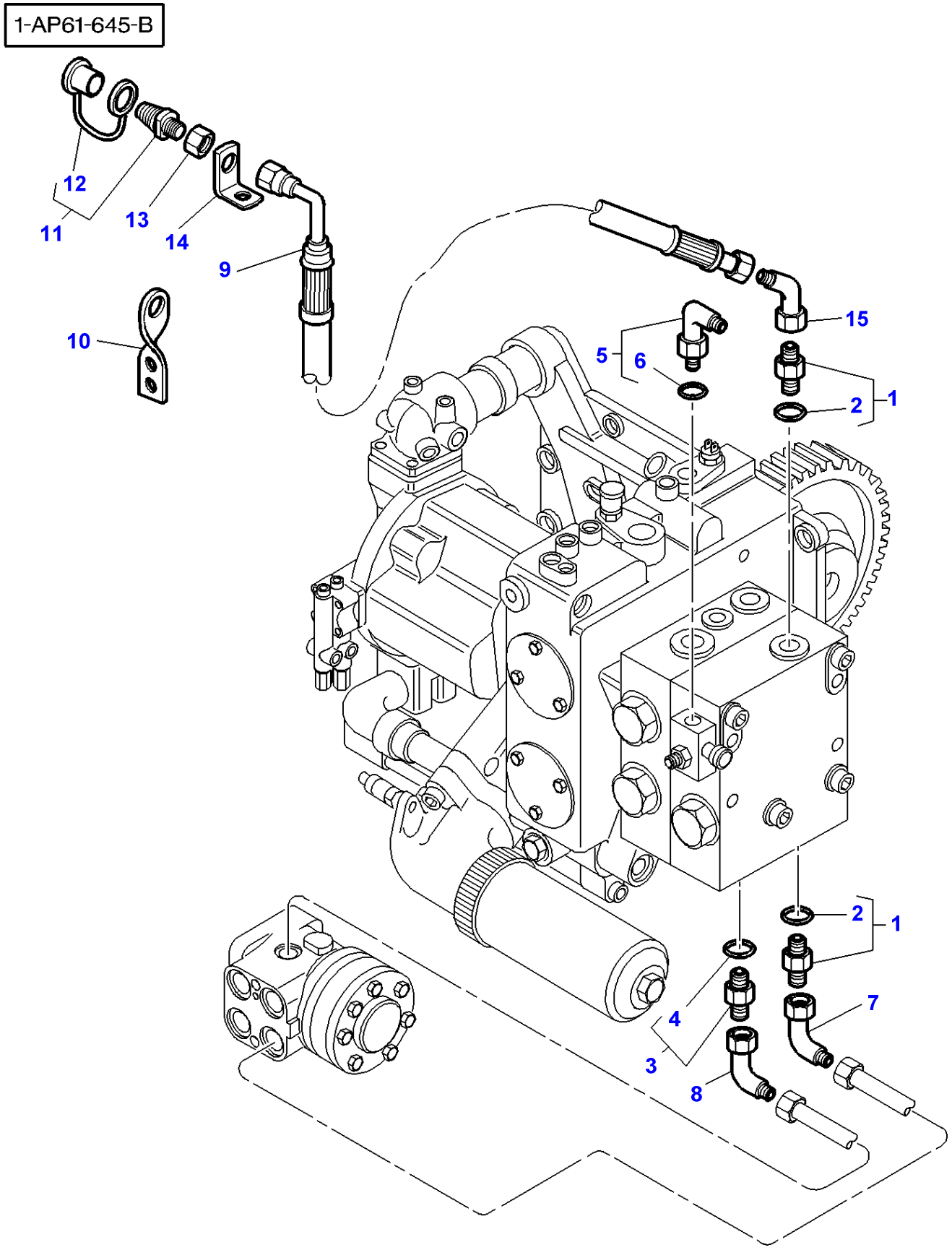
1-AP61-645-B
12
11
13
14
9
10
15
5
6
2
1
2
1
4
3
7
8

| Item | Part Number | Qty | Description | Comments |
|---|---|---|---|---|
| 1 | 3019658X91 | 2 | Union | Diameter M22-3/4 |
| 2 | 3019398X1 | 1 | O Ring | (1) |
| 3 | 3019379X91 | 1 | Union | Diameter M14X9/16 |
| 4 | 3019395X1 | 1 | O Ring | (3) |
| 5 | 3019694X91 | 1 | Union | Diameter M14X1/2 |
| 6 | 3019395X1 | 1 | O Ring | (5) |
| 7 | 365233X1 | 1 | Elbow | |
| 8 | 364603X1 | 1 | Elbow | |
| 9 | 3792041M1 | 1 | Hydr Hose | |
| 10 | 3791579M2 | 1 | Support | Up to Serial or Engine Number H097013 |
| 11 | **3581307M2** | 1 | Pressure Valve | |
| 12 | 3616259M1 | 1 | Plug | (11) |
| 13 | 1442336X1 | 1 | Nut | |
| 14 | 3792736M1 | 1 | Support | From Serial or Engine Number H097014 |
| 15 | 366665X1 | 1 | Elbow | From Serial or Engine Number 03/99 |

1-AP61-650-A

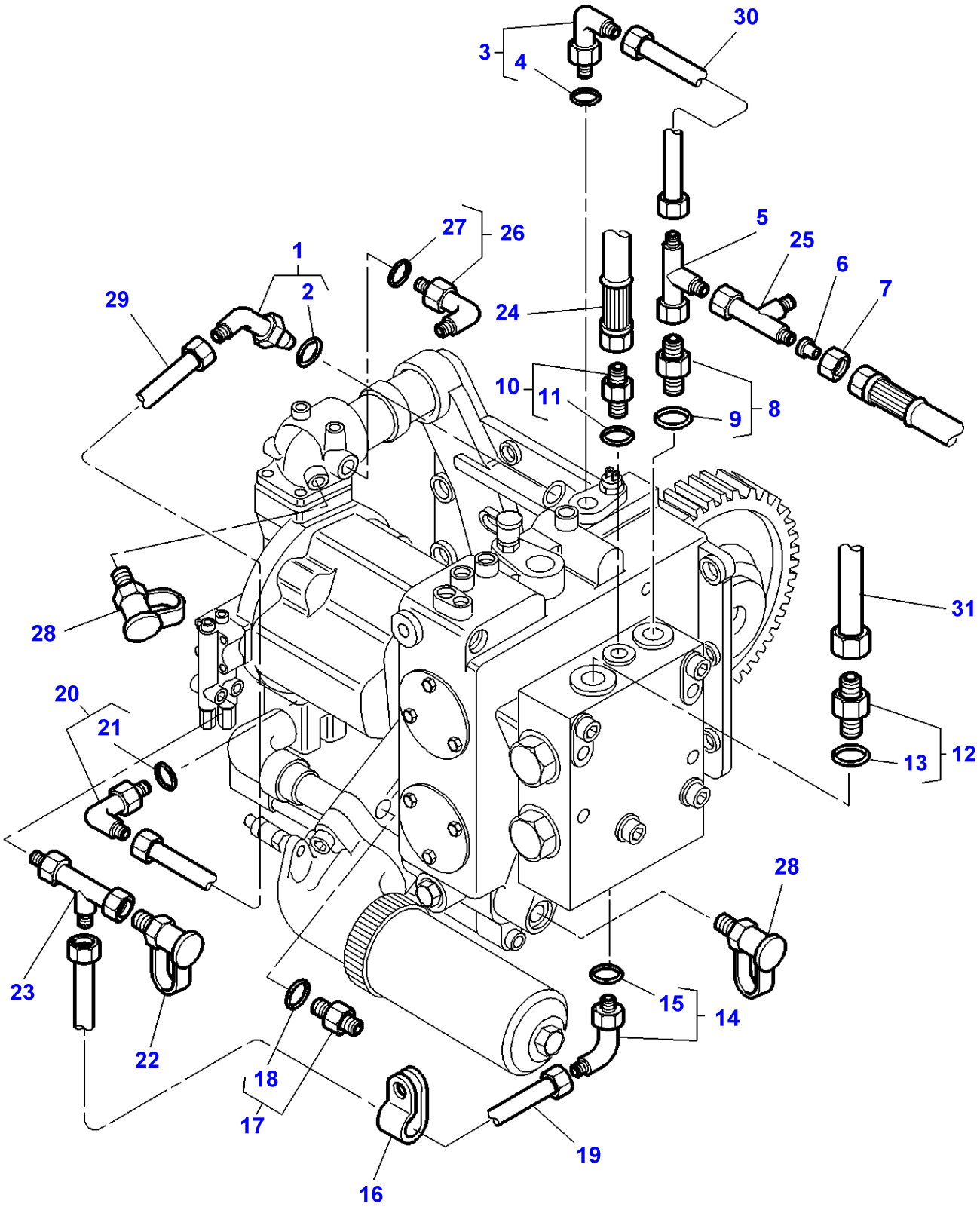
30
3
4
27
26
1
2
29
24
5
25
6
7
10
11
9
8
28
31
20
21
13
12
28
23
15
14
22
18
17
19
16

| Item | Part Number | Qty | Description | Comments |
|---|---|---|---|---|
| 1 | 3019418X91 | 1 | Elbow Nipple | Diameter M22X7:8 |
| 2 | 3019398X1 | 1 | O Ring | (1) |
| 3 | 3019414X91 | 1 | Union | Diameter M16X3/4 |
| 4 | 3019396X1 | 1 | O Ring | (3) |
| 5 | 364735X1 | 1 | Union | |
| 6 | 356627X1 | 1 | Adaptor | Diameter 3/4X9/16 |
| 7 | 338773X1 | 1 | Olive | Diameter 3/4 |
| 8 | 3019658X91 | 1 | Union | Diameter M22-3/4 |
| 9 | 3019398X1 | 1 | O Ring | (9) |
| 10 | 3019379X91 | 1 | Union | Diameter M14X9/16 |
| 11 | 3019395X1 | 1 | O Ring | (10) |
| 12 | 3019391X91 | 1 | Union | Diameter M33X1"5/16 |
| 13 | 3019399X1 | 1 | O Ring | (12) |
| 14 | 3019694X91 | 1 | Union | Diameter M14X1/2 |
| 15 | 3019395X1 | 1 | O Ring | (14) |
| 16 | 3581132M1 | 1 | Clamp | |
| 17 | 3019381X91 | 1 | Union | Diameter M16X3/4 |
| 18 | 3019399X1 | 1 | O Ring | (17) |
| 19 | 3791710M1 | 1 | Tube | |
| 20 | 835007M91 | 1 | Elbow | Diameter 7/8X7/8 |
| 21 | 1882958M1 | 1 | O Ring | (20) |
| 22 | 3712707M1 | 1 | Intake | |
| 23 | 3712689M1 | 1 | Union | |
| 24 | 3792042M1 | 1 | Hydr Hose | |
| 25 | 364735X1 | 1 | Union | Diameter 3/4-16 |
| 26 | 3019416X91 | 1 | Elbow | Diameter M18X7/8 |
| 27 | 3019397X1 | 1 | O Ring | (26) |
| 28 | **3384387M1** | 2 | Pressure Intake | |
| 29 | 3792313M1 | 1 | Tube | |
| 30 | 3791711M1 | 1 | Tube | |
| 31 | 3791709M1 | 1 | Tube | |

1-AP31-608-C

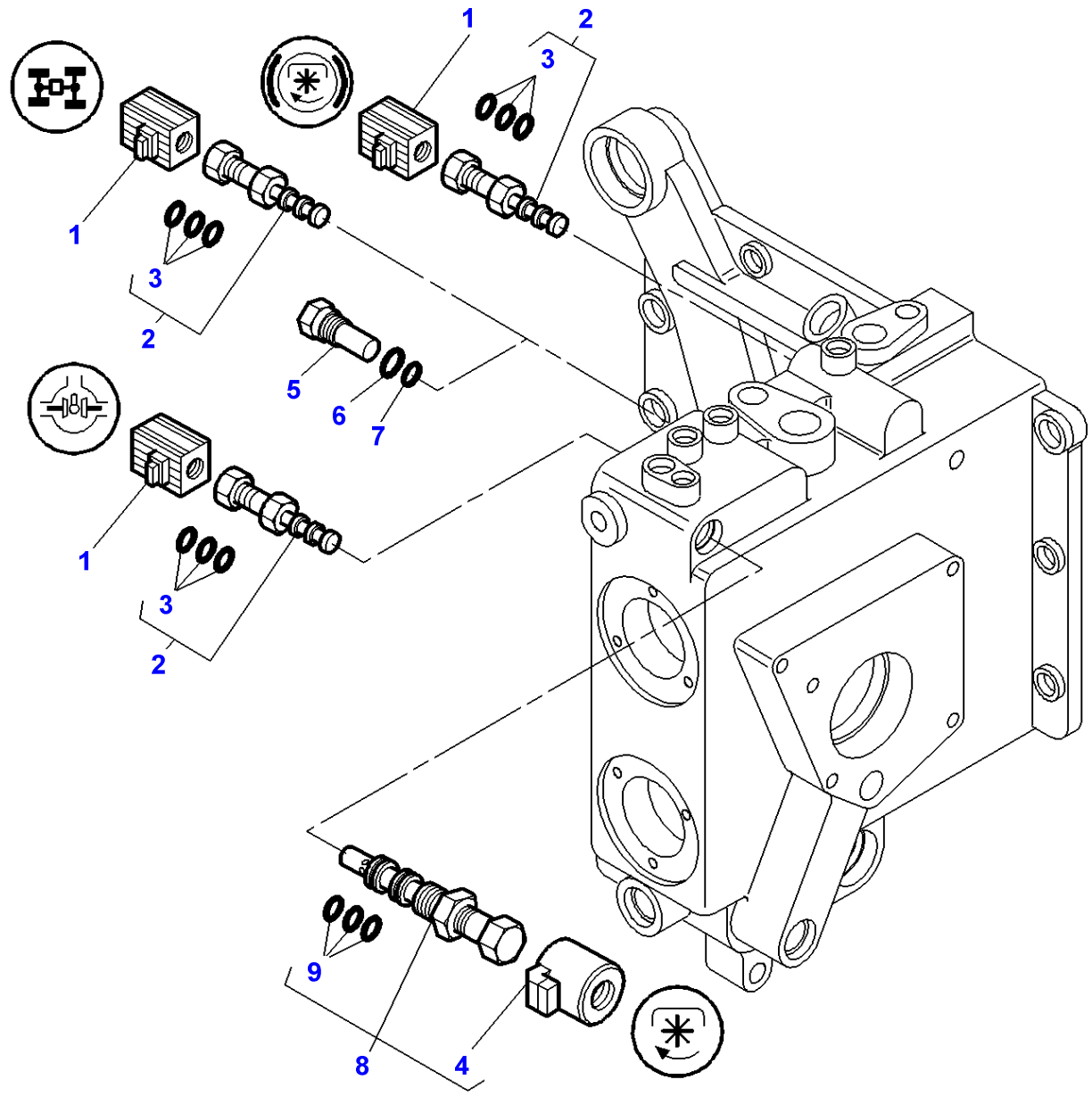

| Item | Part Number | Qty | Description | Comments |
|---|---|---|---|---|
| 1 | **3619763M1** | 3 | Solenoid | |
| 2 | **3619762M1** | 3 | Spool | |
| 3 | 3900994M91 | X | Kit, Joint | (2) |
| 4 | 3791412M1 | 1 | Solenoid | (8) |
| 5 | 3381874M1 | 1 | Plug | Two Wheel Drive |
| 6 | 831497M1 | 1 | O Ring | Two Wheel Drive |
| 7 | 363510X1 | 1 | O Ring | Two Wheel Drive |
| 8 | 3793575M1 | 1 | Electrovalve | Replace and repair. Old not interchangeable with new 3791399m91 |
| 9 | 3902774M92 | 1 | Kit, Joint | (8) |

1-AP75-001-B

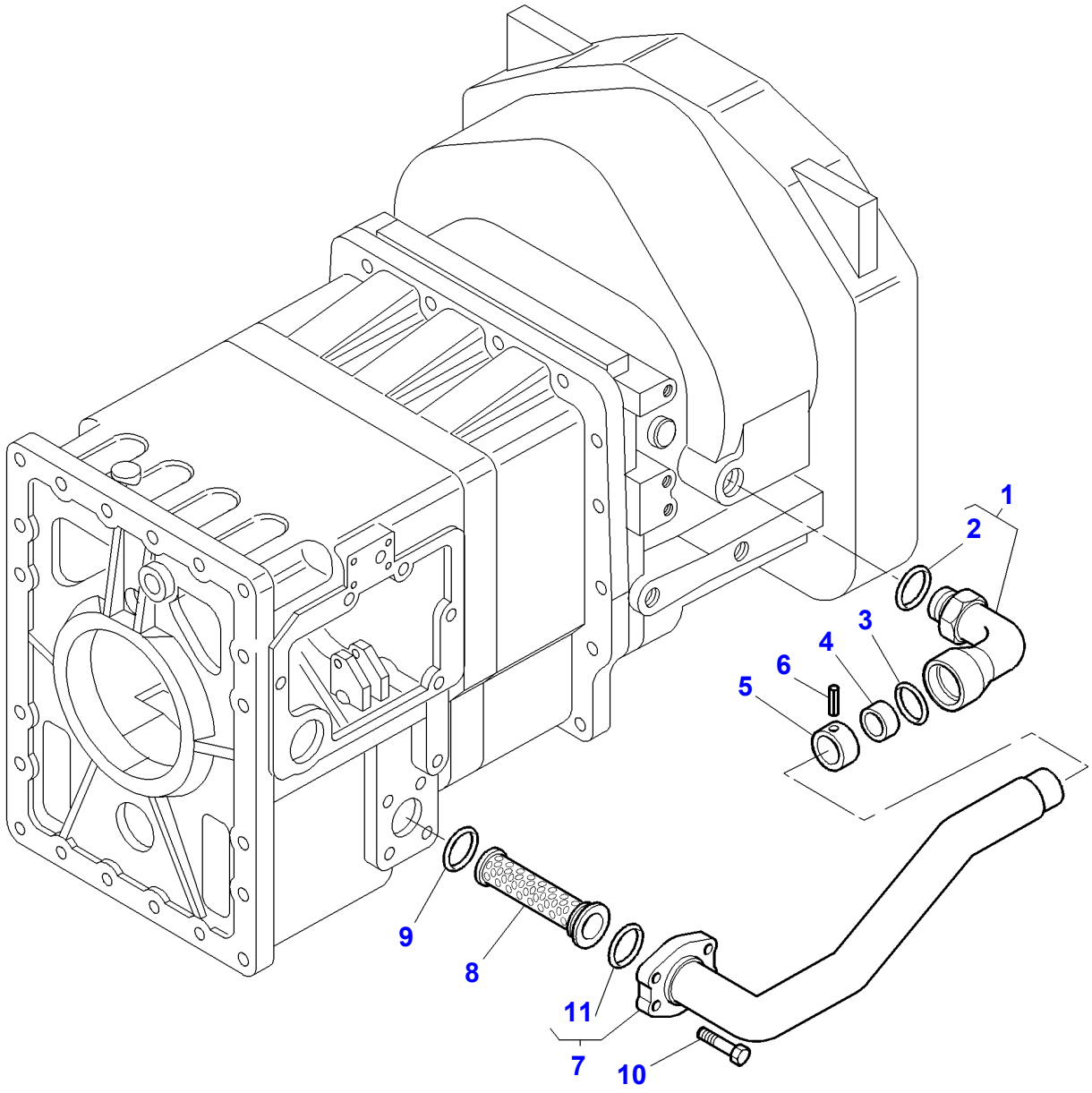

| Item | Part Number | Qty | Description | Comments |
|---|---|---|---|---|
| 1 | 3716901M1 | 1 | Bridle | |
| 2 | 831504M1 | 1 | O Ring | (1) |
| 3 | 852140M1 | 1 | O Ring | |
| 4 | 3716902M1 | 1 | Gasket | |
| 5 | 3716903M1 | 1 | Bush | |
| 6 | 3009351X1 | 1 | Screw | M6x8 |
| 7 | 3716908M92 | 1 | Tube | |
| 8 | **3716334M1** | 1 | Strainer | |
| 9 | 1006234M1 | 1 | O Ring | |
| 10 | 1440356X1 | 4 | Screw Metric | M12X30 |
| 11 | 3716358M1 | 1 | Seal | (7) |

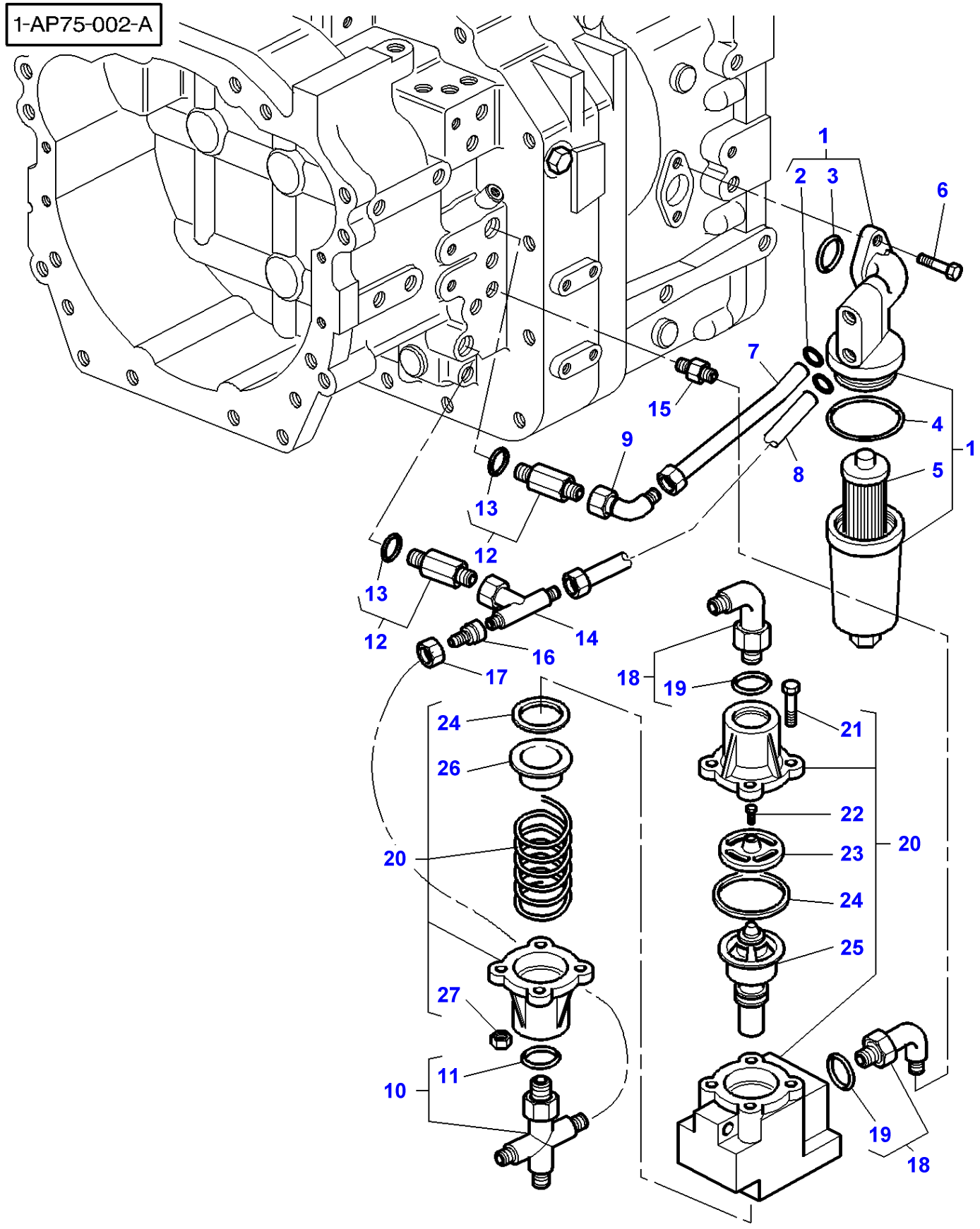
1-AP75-002-A
1
2
3
6
7
15
4
1
9
8
5
13
12
13
12
14
16
17
18
19
21
24
26
22
20
23
20
24
25
27
10
11
19
18

| Item | Part Number | Qty | Description | Comments |
|---|---|---|---|---|
| 1 | 3791110M2 | 1 | Filter | |
| 2 | 70924776 | 2 | O Ring | (1) |
| 3 | 377353X1 | 1 | O Ring | (1) |
| 4 | **842332M1** | 1 | Gasket | (1) |
| 5 | **3618662M1** | 1 | Filter Insert | (1) |
| 6 | 1440356X1 | 2 | Screw Metric | M12x30 |
| 7 | 3791875M1 | 1 | Tube | |
| 8 | 3791876M1 | 1 | Tube | |
| 9 | 367277X1 | 1 | Elbow | Diameter 1"5/16-12 |
| 10 | 3791174M1 | 1 | Union | |
| 11 | | 1 | O Ring | [A]<br>(10) |
| 12 | 3791393M91 | 2 | Union | Diameter 1"5/16-12 |
| 13 | 835026M1 | 1 | O Ring | (12) |
| 14 | 373793X1 | 1 | Teepiece | Diameter 1"5/16-12 |
| 15 | 3790887M1 | 1 | Union | Diameter 1"5/16<br>Diameter 1"1/16-18 |
| 16 | 356633X1 | 1 | Adaptor | |
| 17 | 375048X1 | 1 | Nut | |
| 18 | 3791206M1 | 2 | Union | |
| 19 | | 1 | O Ring | [A]<br>(18) |
| 20 | 3790883M1 | 1 | Pressure Valve | |
| 21 | 70934293 | 4 | Bolt | (20) |
| 22 | 72514302 | 1 | Screw | (20) |
| 23 | 72514301 | 1 | Washer | (20) |
| 24 | 72511856 | 2 | Seal | (20) |
| 25 | 72514303 | 1 | Pressure Valve | (20) |
| 26 | 72511858 | 1 | Seal | (20) |
| 27 | 70923358 | 4 | Nut | (20) |

**FOOTNOTE [A]** NUMBER TO BE ADVISED

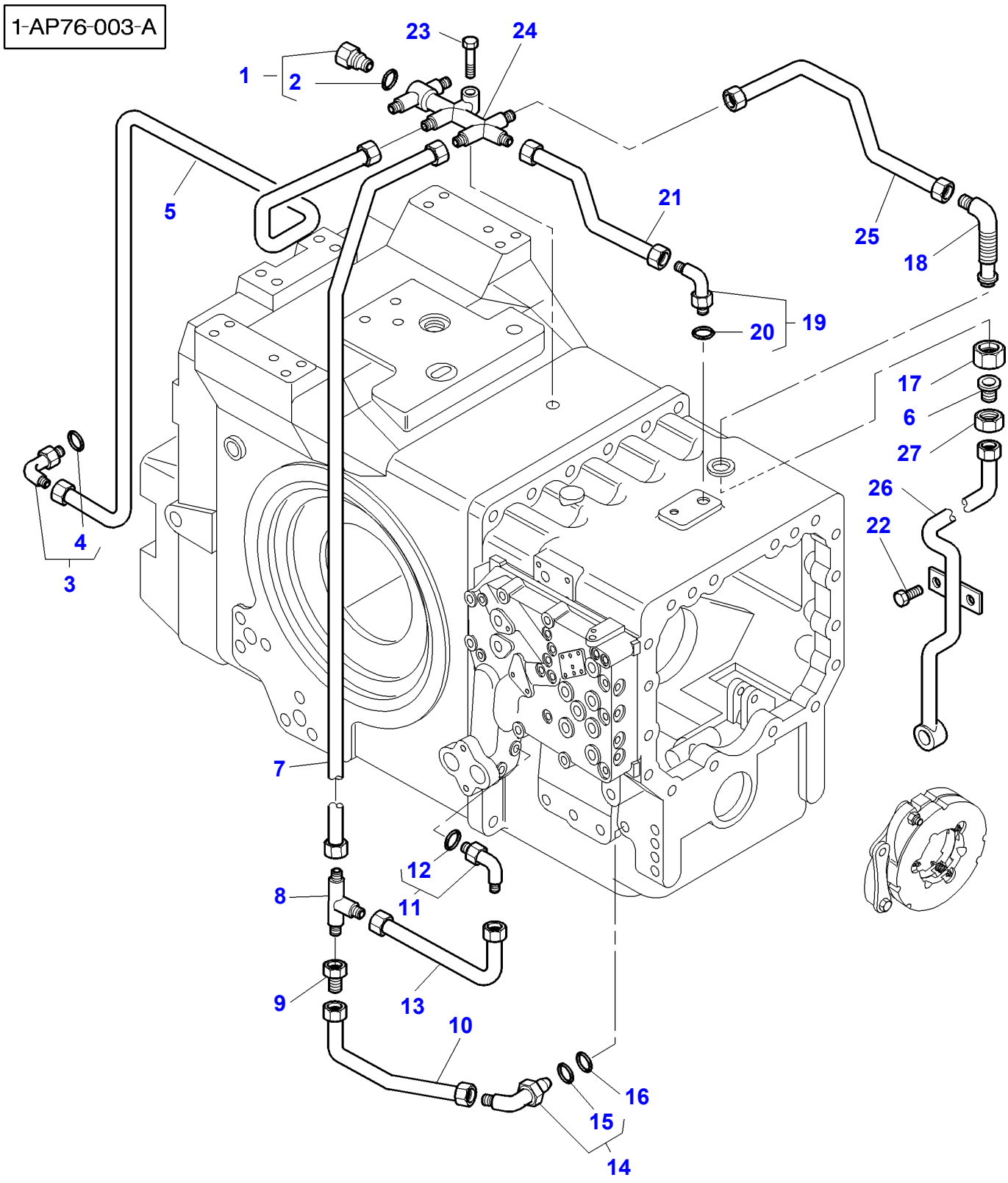
1-AP76-003-A
23
24
1
2
5
21
25
18
19
20
17
6
27
26
22
4
3
7
12
8
11
9
13
10
16
15
14

| Item | Part Number | Qty | Description | Comments |
|---|---|---|---|---|
| 1 | 358724X91 | 1 | Plug | |
| 2 | 831497M1 | 1 | O Ring | (1) |
| 3 | 3716879M91 | 1 | Union | |
| 4 | 3019395X1 | 1 | O Ring | (3) Diameter 3/4" |
| 5 | 3790898M91 | 1 | Tube | |
| 6 | 380003X1 | 1 | Union | |
| 7 | 3790896M91 | 1 | Tube | |
| 8 | 356561X1 | 1 | Union | |
| 9 | 377651X1 | 1 | Reducer | |
| 10 | 3790894M91 | 1 | Tube | |
| 11 | 3019416X91 | 1 | Elbow | |
| 12 | 3019397X1 | 1 | O Ring | (11) |
| 13 | 3790892M91 | 1 | Tube | |
| 14 | 3716884M91 | 1 | Union | |
| 15 | 831497M1 | 1 | O Ring | (14) |
| 16 | 3019395X1 | 1 | O Ring | |
| 17 | 353436X1 | 1 | Nut Unf | Diameter 3/4"-16 |
| 18 | 3791258M91 | 1 | Union | |
| 19 | 3716772M91 | 1 | Union | |
| 20 | 831497M1 | 1 | O Ring | (19) |
| 21 | 3790918M91 | 1 | Tube | |
| 22 | 391989X1 | 2 | Screw Metric | M8x20 |
| 23 | 339010X1 | 1 | Bolt Metric | M8x40 |
| 24 | 3790871M2 | 1 | Bar | |
| 25 | 3790924M91 | 1 | Tube | |
| 26 | 3790926M93 | 1 | Tube | |
| 27 | 195960M1 | 1 | Nut | |

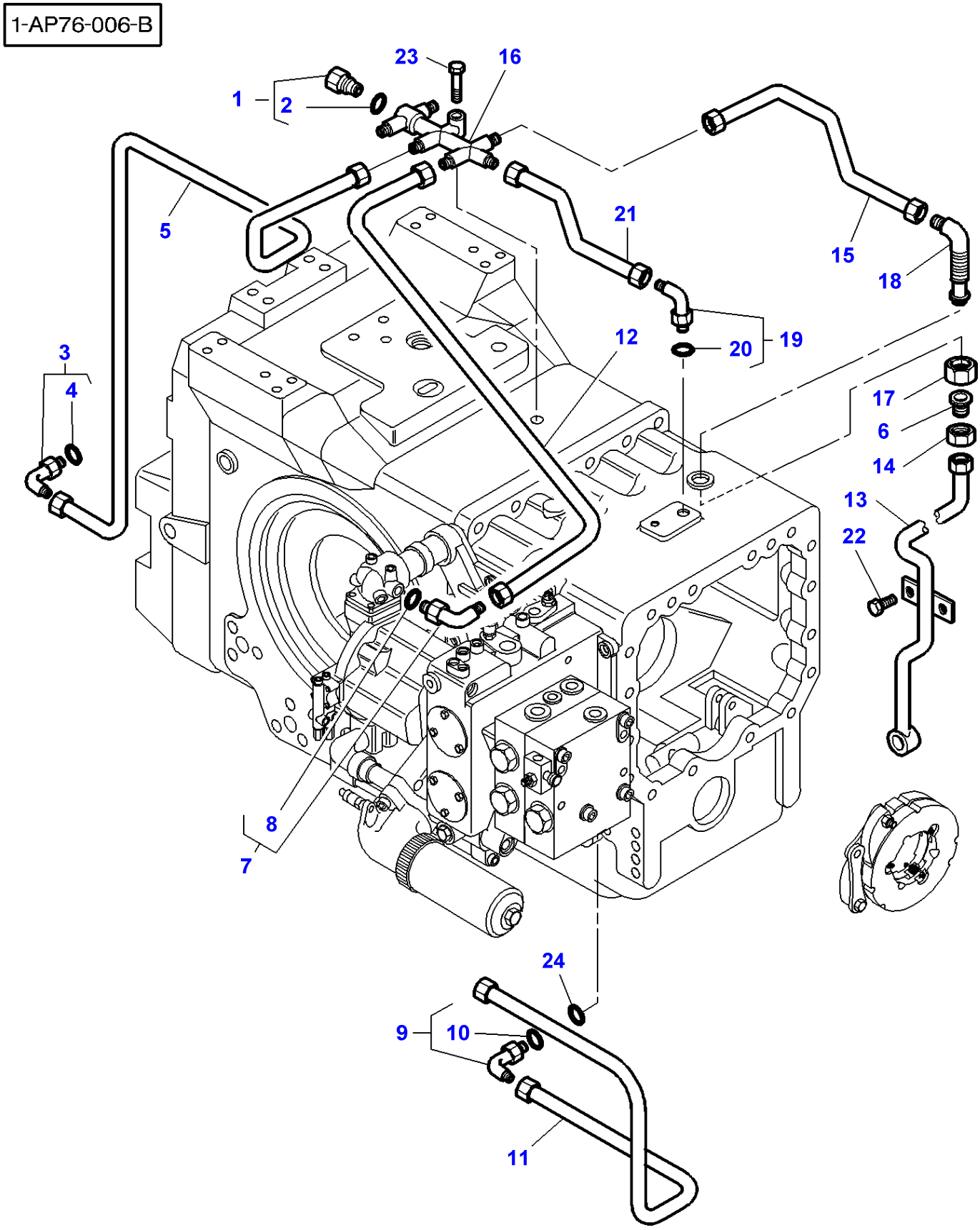
1-AP76-006-B
23
16
1
2
5
21
15
18
3
4
12
20
19
17
6
14
13
22
8
7
24
9
10
11

| Item | Part Number | Qty | Description | Comments |
|---|---|---|---|---|
| 1 | 358724X91 | 1 | Plug | |
| 2 | 831497M1 | 1 | O Ring | (1) |
| 3 | 3716879M91 | 1 | Union | |
| 4 | 3019395X1 | 1 | O Ring | (3) |
| 5 | 3790898M91 | 1 | Tube | |
| 6 | 380003X1 | 1 | Union | |
| 7 | 3019416X91 | 1 | Elbow | (6)<br>Diameter M18 |
| 8 | 3019397X1 | 1 | O Ring | |
| 9 | 3716884M91 | 1 | Union | |
| 10 | | 1 | O Ring | [A]<br>(9) |
| 11 | 3792019M1 | 1 | Tube | |
| 12 | 3791716M1 | 1 | Tube | |
| 13 | 3790928M93 | 1 | Tube | |
| 14 | 195960M1 | 1 | Nut | |
| 15 | 3790924M91 | 1 | Tube | |
| 16 | 3790871M2 | 1 | Bar | |
| 17 | 353436X1 | 1 | Nut Unf | |
| 18 | 3791258M91 | 1 | Union | |
| 19 | 3791953M91 | 1 | Union | Up to Serial or Engine Number 28-JUN-1999 |
| | 3791429M91 | 1 | Union | From Serial or Engine Number 29-JUN-1999 |
| 20 | | 1 | O Ring | [A]<br>(19) |
| 21 | 3790918M91 | 1 | Tube | |
| 22 | 391989X1 | 2 | Screw Metric | M8X20 |
| 23 | 339010X1 | 1 | Bolt Metric | M8X40 |
| 24 | 3019395X1 | 1 | O Ring | |

**FOOTNOTE [A]** NUMBER TO BE ADVISED

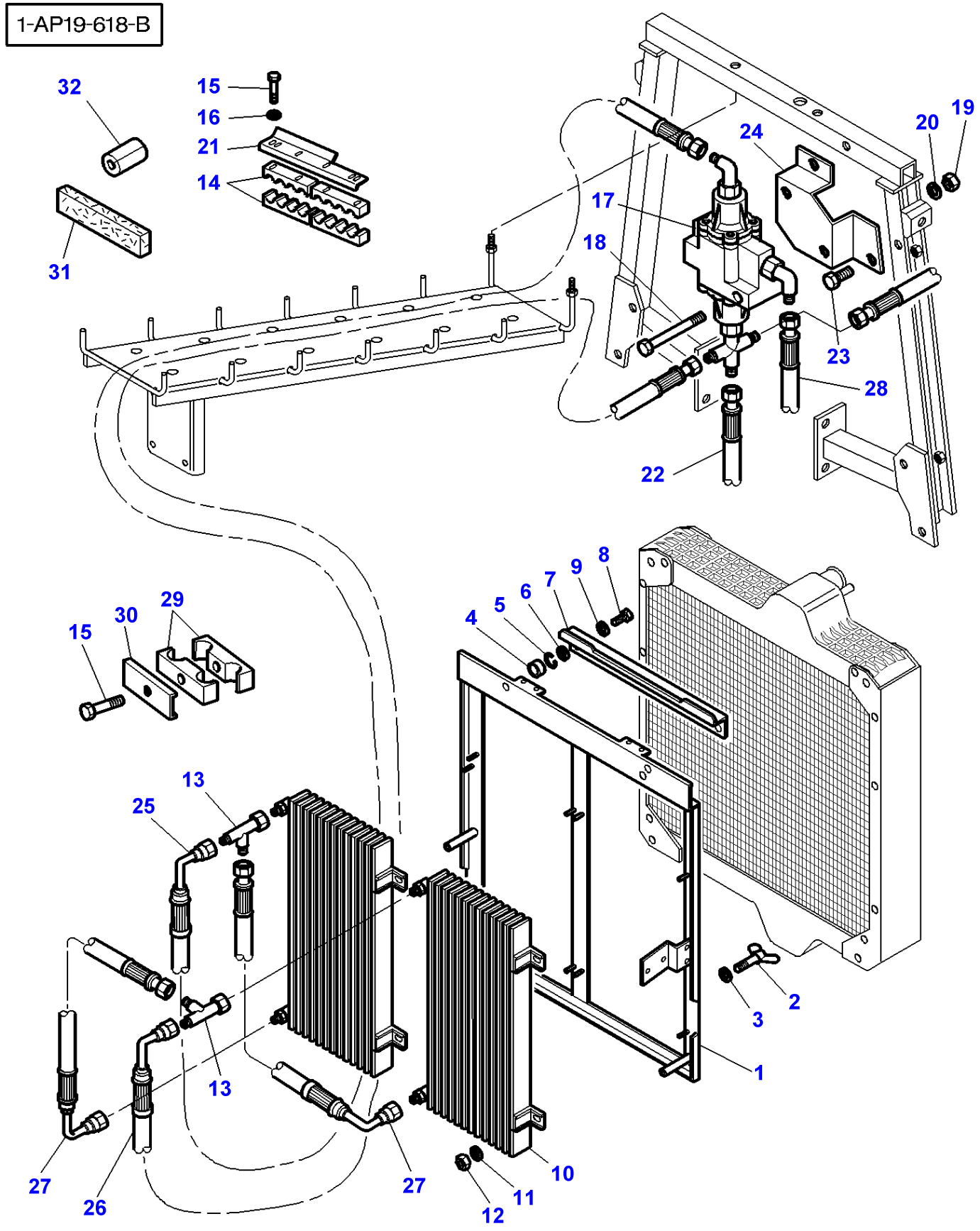
1-AP19-618-B
32
31
15
16
21
14
19
20
24
17
18
23
28
22
15
30
29
8
9
7
6
5
4
13
25
2
3
1
13
27
26
27
10
11
12

| Item | Part Number | Qty | Description | Comments |
|---|---|---|---|---|
| 1 | 3777273M3 | 1 | Support | |
| 2 | 339107X1 | 2 | Wingbolt | M8X16 |
| 3 | 390972X1 | 2 | Washer Metric | |
| 4 | 3713694M1 | 2 | Spacer | |
| 5 | 1440522X1 | 2 | Clip | |
| 6 | 390972X1 | 2 | Washer Metric | |
| 7 | 3777274M1 | 1 | Rail | |
| 8 | 339124X1 | 2 | Hex. Sock. Screw | M8X16 |
| 9 | 390972X1 | 2 | Washer Metric | |
| 10 | 3777275M3 | 2 | Oil Cooler | |
| 11 | 390972X1 | 6 | Washer Metric | |
| 12 | 339169X1 | 6 | Nut | |
| 13 | 364704X1 | 2 | Teepiece | |
| 14 | 5015337M2 | 1 | Bridle | |
| 15 | 339168X1 | 5 | Screw | M8X50<br>Up to Serial or Engine Number G271011 |
| | 339368X1 | 4 | Bolt Metric | M8X60<br>From Serial or Engine Number G271012 |
| 16 | 390972X1 | 4 | Washer Metric | |
| 17 | | 1 | Pressure Valve | See Page - Reference Number 070-0115/20 |
| 18 | 3009502X1 | 2 | Bolt Metric | M10X80 |
| 19 | 3009693X1 | 2 | Nut Metric | |
| 20 | 390734X1 | 2 | Washer | |
| 21 | 3714231M2 | 1 | Support | |
| 22 | 3778559M2 | 1 | Hydr Hose | Length 1050MM |
| 23 | 339123X1 | 2 | Hex. Sock. Screw | M8X20 |
| 24 | 3778554M1 | 1 | Support | |
| 25 | 3778555M2 | 1 | Hydr Hose | Length 2700MM |
| 26 | 3778556M2 | 1 | Hydr Hose | Length 2600MM |
| 27 | 3778557M1 | 2 | Hydr Hose | Length 700MM |
| 28 | 3778558M2 | 1 | Hydr Hose | Length 1150MM |
| 29 | 3387865M1 | 2 | Bridle | |
| 30 | 3387866M1 | 1 | Plate | |
| 31 | 3779389M1 | 1 | Gasket | From Serial or Engine Number G243003<br>30X13X160MM |
| 32 | 3780011M1 | 6 | Grommet | |

1-AG16-602-A

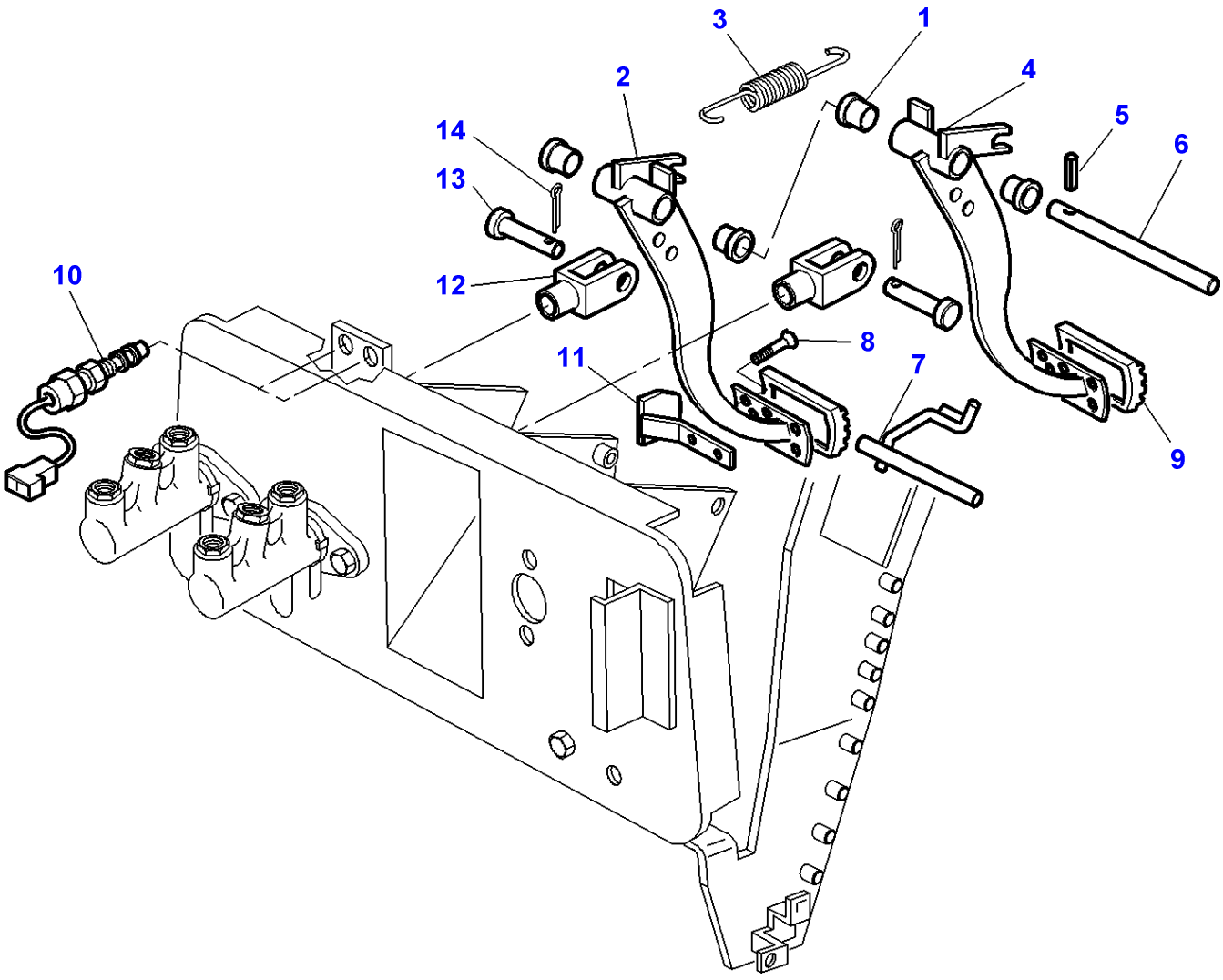

| Item | Part Number | Qty | Description | Comments |
|---|---|---|---|---|
| 1 | 3385604M1 | 4 | Bearing | |
| 2 | 3583924M2 | 1 | Pedal | Right Hand |
| 3 | 3384657M1 | 2 | Spring | |
| 4 | 3583925M1 | 1 | Pedal | Left Hand |
| 5 | 391290X1 | 1 | Pin | Diameter 5X30 |
| 6 | 3713576M1 | 1 | Clevis Pin | |
| 7 | 3583930M3 | 1 | Latch | |
| 8 | 392404X1 | 4 | Screw | |
| 9 | 1626321M2 | 2 | Skate | |
| 10 | 3780395M2 | 2 | Switch,Indirect | |
| 11 | 3714488M3 | 2 | Stop | |
| 12 | 3385612M3 | 2 | Clevis | Length 51MM |
| 13 | 3019213X1 | 2 | Clevis Pin | |
| 14 | 357146X1 | 2 | Pin | 2,8X25MM |

1-AG18-603-B

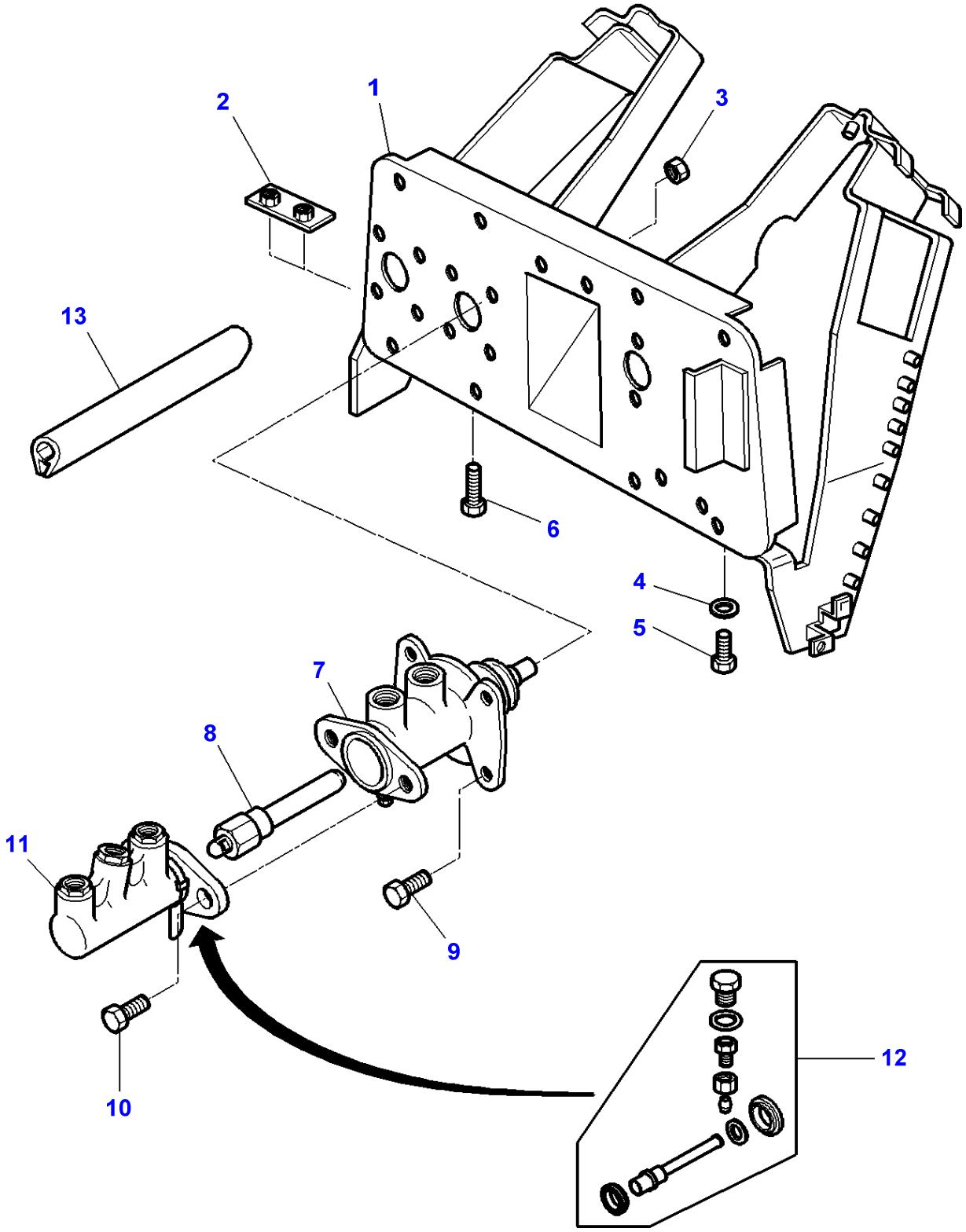

| Item | Part Number | Qty | Description | Comments |
|---|---|---|---|---|
| 1 | 3713562M94 | 1 | Support | |
| 2 | 3714445M1 | 1 | Stop | |
| 3 | 339169X1 | 4 | Nut | |
| 4 | 390972X1 | 8 | Washer Metric | |
| 5 | 339123X1 | 8 | Hex. Sock. Screw | M8X20 |
| 6 | 339666X1 | 2 | Hex. Sock. Screw | M6X20 |
| 7 | 3617596M1 | 2 | Brake Cylinder | |
| 8 | 3617594M91 | 2 | Stem | |
| 9 | 339761X1 | 8 | Hex. Sock. Screw | M8X25 |
| 10 | 339761X1 | 4 | Hex. Sock. Screw | M8X25 |
| 11 | 3384685M3 | 2 | Main Cylinder | |
| 12 | 1810832M91 | 1 | Kit, Repair | (12) |
| 13 | 3580695M1 | 1 | Gasket | Length 1600 MM |

1-AG18-604-B

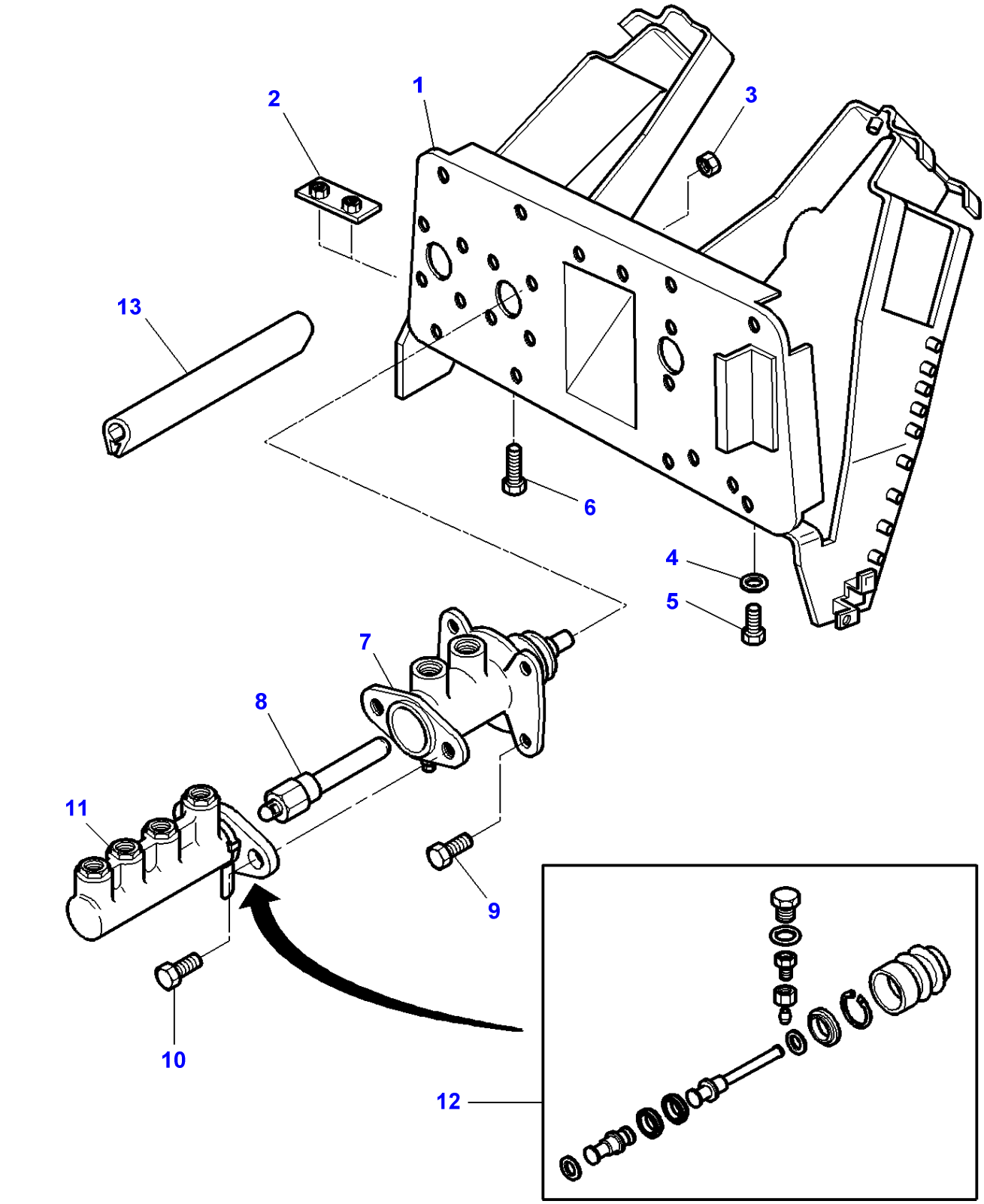

| Item | Part Number | Qty | Description | Comments |
|---|---|---|---|---|
| 1 | 3713562M94 | 1 | Support | |
| 2 | 3714445M1 | 1 | Stop | |
| 3 | 339169X1 | 4 | Nut | |
| 4 | 390972X1 | 8 | Washer Metric | |
| 5 | 339123X1 | 8 | Hex. Sock. Screw | M8X20 |
| 6 | 339666X1 | 2 | Hex. Sock. Screw | M6X20 |
| 7 | 3617596M1 | 2 | Brake Cylinder | |
| 8 | 3617594M91 | 2 | Stem | |
| 9 | 339761X1 | 8 | Hex. Sock. Screw | M8X25 |
| 10 | 339761X1 | 4 | Hex. Sock. Screw | M8X25 |
| 11 | 3383079M5 | 2 | Main Cylinder | |
| 12 | 1810833M91 | 1 | Kit, Repair | (12) |
| 13 | 3580695M1 | 1 | Gasket | Length 1600 MM |

1-AG32-601-A

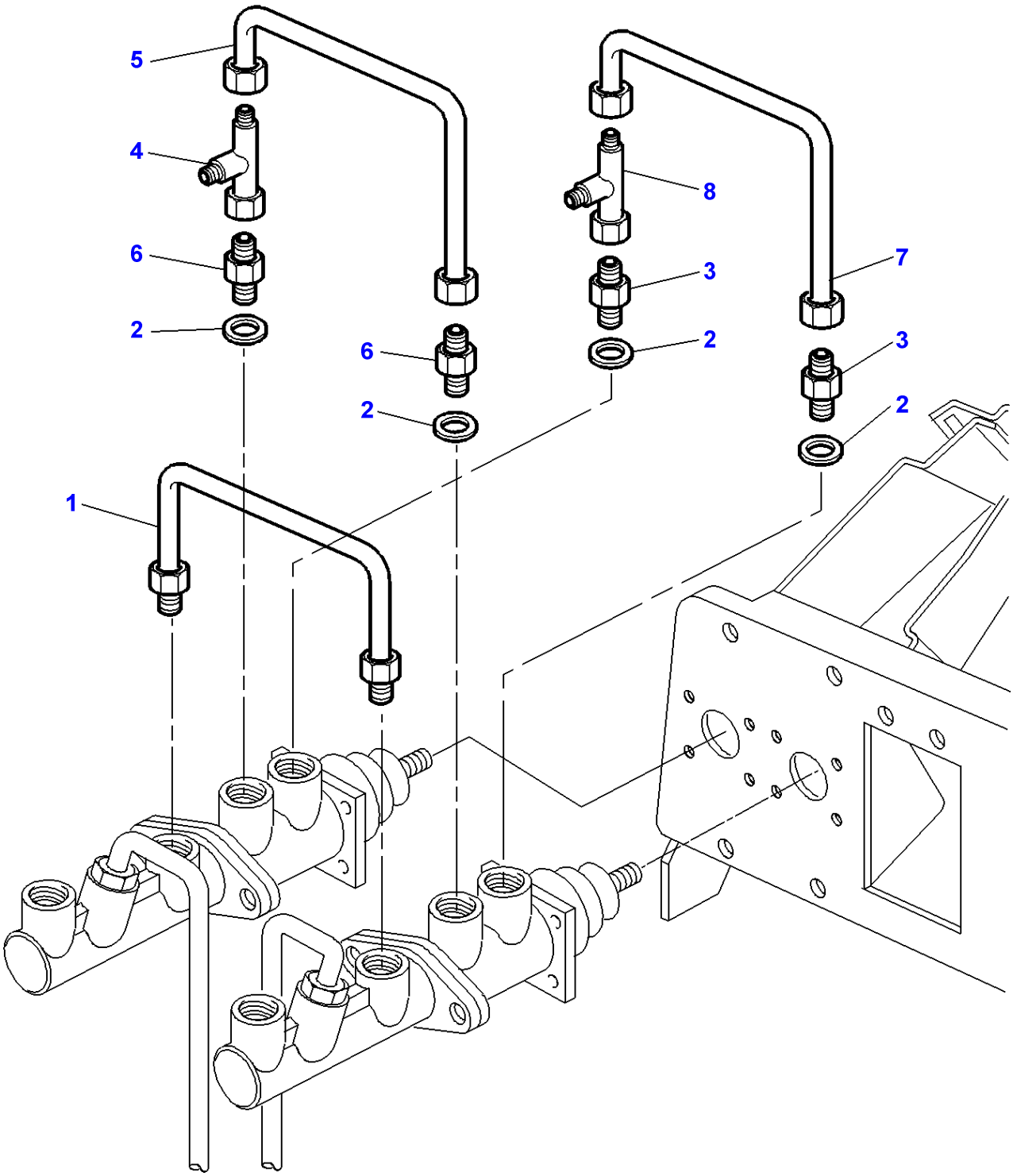

| Item | Part Number | Qty | Description |
|---|---|---|---|
| 1 | 3386681M91 | 1 | Tube |
| 2 | 3004861X1 | 4 | Washer |
| 3 | 3019574X1 | 2 | Union |
| 4 | 364735X1 | 1 | Union |
| 5 | 3387574M91 | 1 | Tube |
| 6 | 3019382X1 | 2 | Union |
| 7 | 3386678M91 | 1 | Tube |
| 8 | 377218X1 | 1 | Teepiece |

1-AG32-603-A

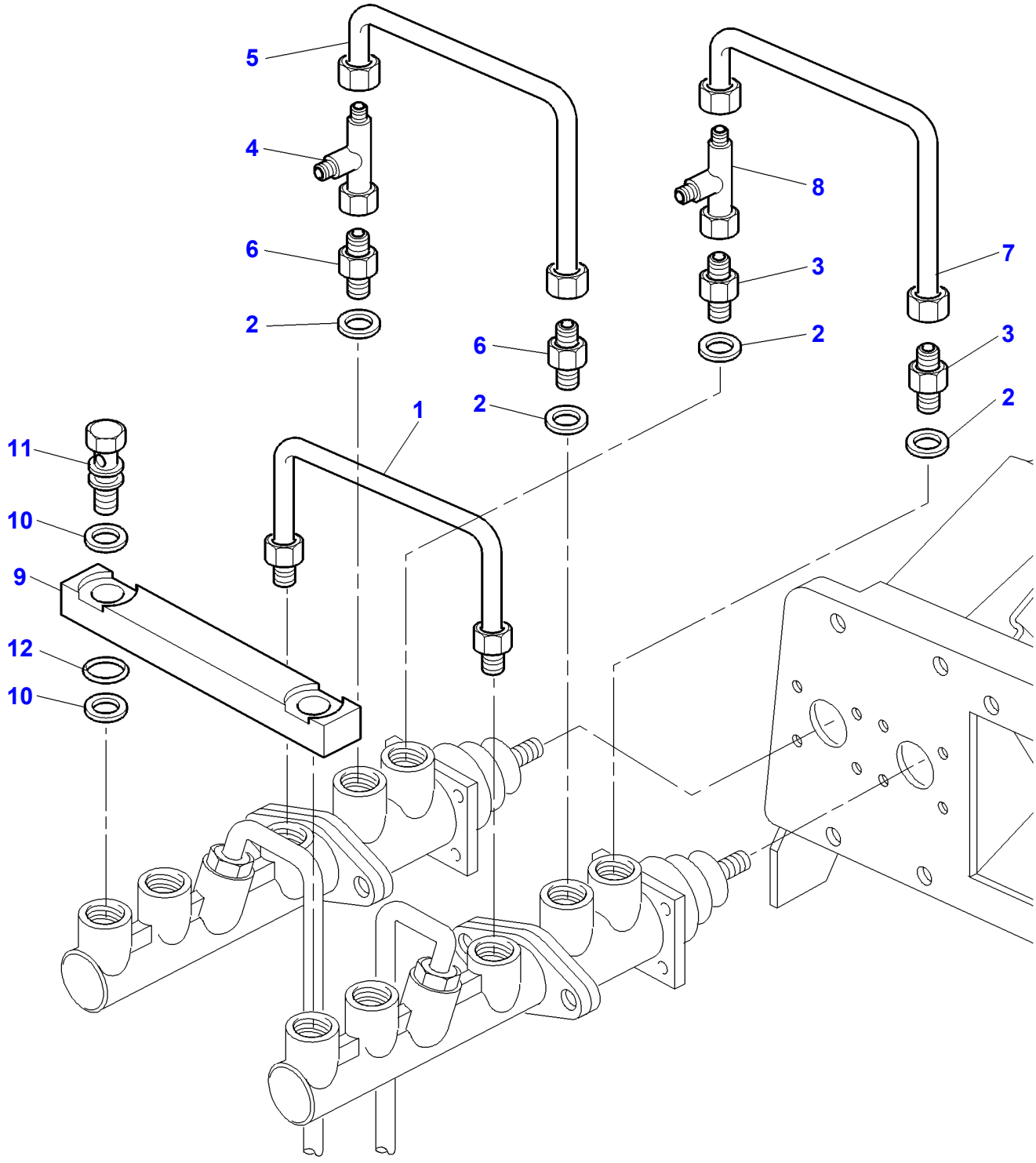

| Item | Part Number | Qty | Description |
|---|---|---|---|
| 1 | 3386681M91 | 1 | Tube |
| 2 | 3004861X1 | 4 | Washer |
| 3 | 3019574X1 | 2 | Union |
| 4 | 364735X1 | 1 | Union |
| 5 | 3387574M91 | 1 | Tube |
| 6 | 3019382X1 | 2 | Union |
| 7 | 3386678M91 | 1 | Tube |
| 8 | 377218X1 | 1 | Teepiece |
| 9 | 3581463M2 | 1 | Bar |
| 10 | 3581464M1 | 4 | Bush |
| 11 | 3581491M1 | 2 | Banjo Bolt |
| 12 | 3019395X1 | 2 | O Ring |

1-AP78-006-B

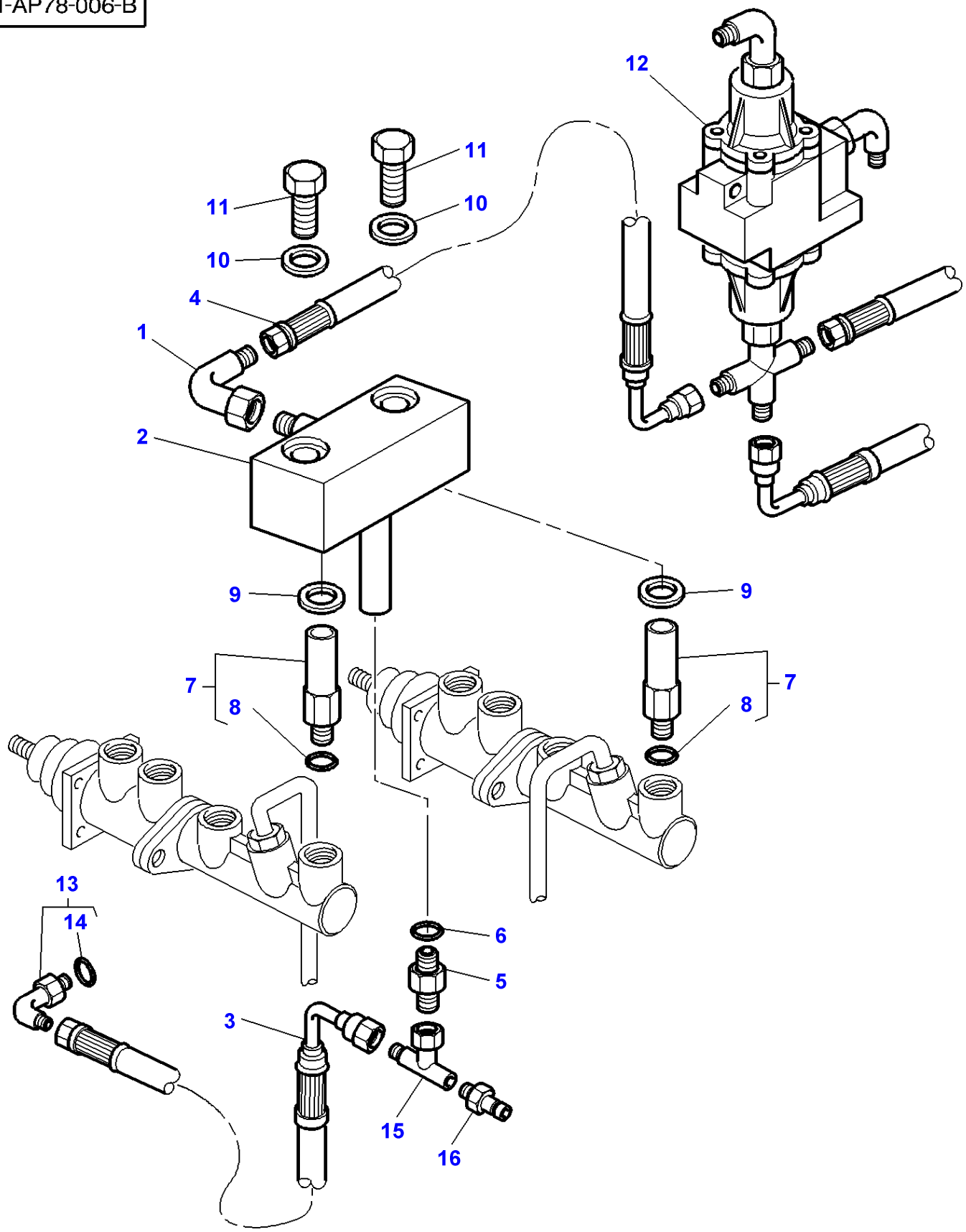

| Item | Part Number | Qty | Description | Comments |
|---|---|---|---|---|
| 1 | 3791382M91 | 1 | Union | |
| 2 | 3780431M92 | 1 | Tank | |
| 3 | 3778665M1 | 1 | Hydr Hose | |
| 4 | 3580768M1 | 1 | Hydr Hose | |
| 5 | 3617226M1 | 1 | Jet | |
| 6 | 3019395X1 | 1 | O Ring | |
| 7 | 3778718M92 | 2 | Union | |
| 8 | 3019395X1 | 1 | O Ring | (7) |
| 9 | 3778767M1 | 2 | Bush | Diameter 14MM |
| 10 | 3778766M1 | 2 | Bush | Diameter 8MM |
| 11 | 339123X1 | 2 | Hex. Sock. Screw | M8 |
| 12 | | 1 | Pressure Valve | See Page - Reference Number 070-0115/20 |
| 13 | 3019416X91 | 1 | Elbow | M18 |
| 14 | 3019397X1 | 1 | O Ring | (13) |
| 15 | 3780180M1 | 1 | Teepiece | |
| 16 | **3384387M1** | 1 | Pressure Intake | |

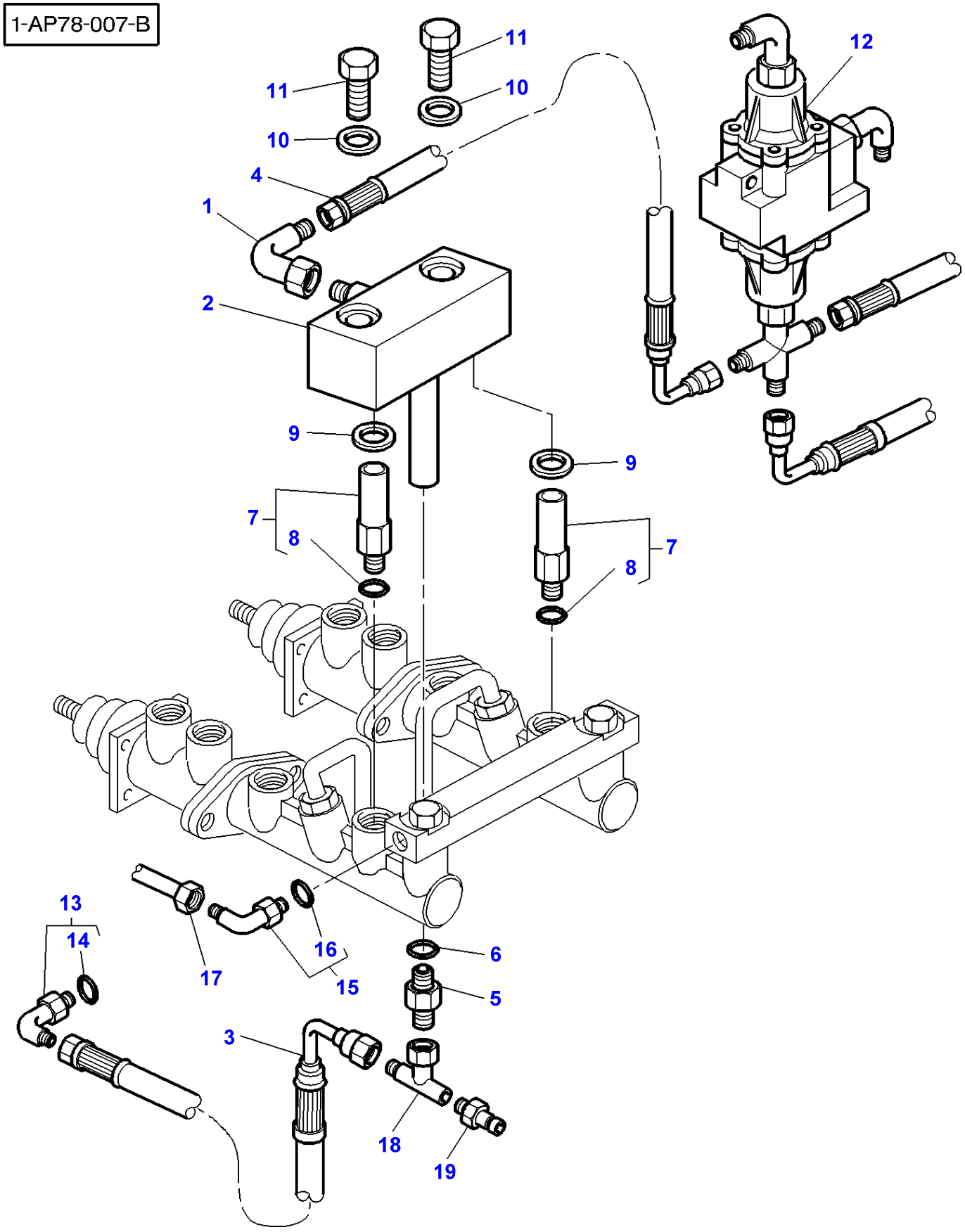
1-AP78-007-B
11
11
10
10
12
4
1
2
9
9
7
8
7
8
13
14
16
17
15
6
5
3
18
19

| Item | Part Number | Qty | Description | Comments |
|---|---|---|---|---|
| 1 | 3791382M91 | 1 | Union | |
| 2 | 3780431M92 | 1 | Tank | |
| 3 | 3778665M1 | 1 | Hydr Hose | |
| 4 | 3580768M1 | 1 | Hydr Hose | |
| 5 | 3617226M1 | 1 | Jet | |
| 6 | 3019395X1 | 1 | O Ring | |
| 7 | 3778718M92 | 2 | Union | |
| 8 | 3019395X1 | 1 | O Ring | (7) |
| 9 | 3778767M1 | 2 | Bush | Diameter 14MM |
| 10 | 3778766M1 | 2 | Bush | Diameter 8MM |
| 11 | 339123X1 | 2 | Hex. Sock. Screw | M8 |
| 12 | | 1 | Pressure Valve | See Page - Reference Number 070-0115/20 |
| 13 | 3019416X91 | 1 | Elbow | M18 |
| 14 | 3019397X1 | 1 | O Ring | (13) |
| 15 | 3019694X91 | 1 | Union | |
| 16 | 3019395X1 | 1 | O Ring | (15) |
| 17 | 3779144M1 | 1 | Tube | |
| 18 | 3780180M1 | 1 | Teepiece | |
| 19 | **3384387M1** | 1 | Pressure Intake | |

1-AP78-003-B

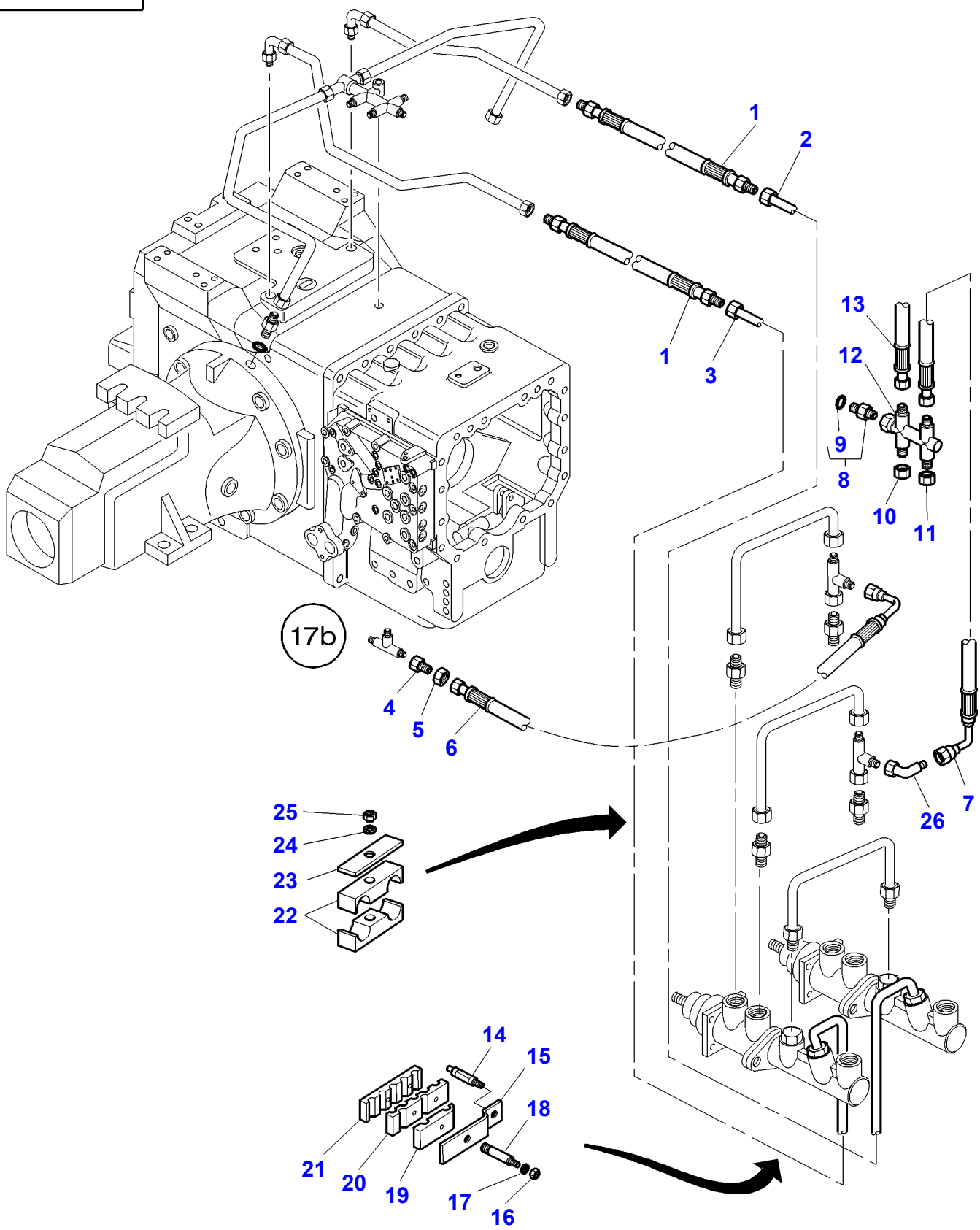

| Item | Part Number | Qty | Description | Comments |
|---|---|---|---|---|
| 1 | 3778585M1 | 2 | Hydr Hose | |
| 2 | 3778041M3 | 1 | Tube | Left Hand |
| 3 | 3778040M2 | 1 | Tube | Right Hand |
| 4 | 22576X | 1 | Union Nut | |
| 5 | 356629X1 | 1 | Reducer | |
| 6 | 3778664M1 | 1 | Hydr Hose | |
| 7 | 3778663M1 | 1 | Hydr Hose | |
| 8 | 3019387X91 | 1 | Union | |
| 9 | 3019398X1 | 1 | O Ring | (8) |
| 10 | 356580X1 | 1 | Plug | |
| 11 | 356579X1 | 1 | Cap | |
| 12 | 3777412M1 | 1 | Union | |
| 13 | 3779448M2 | 1 | Tube | |
| 14 | 3778279M1 | 1 | Stud | |
| 15 | 3778280M1 | 1 | Plate | |
| 16 | 1441500X1 | 1 | Locknut | M6 |
| 17 | 391038X1 | 3 | Washer | |
| 18 | 3715878M3 | 1 | Stud | Diameter M8/M6 |
| 19 | 3715882M1 | 1 | Bridle | |
| 20 | 3715881M1 | 1 | Bridle | |
| 21 | 3715880M1 | 1 | Bridle | |
| 22 | 3384779M1 | 4 | Bridle | |
| 23 | 1625982M2 | 2 | Plate | |
| 24 | 391038X1 | 2 | Washer | |
| 25 | 339030X1 | 2 | Nut Metric | |
| 26 | 365233X1 | 1 | Elbow | |

**FOOTNOTE [A]** WITH FULL POWERSHIFT
**FOOTNOTE [B]** WITH DYNASHIFT

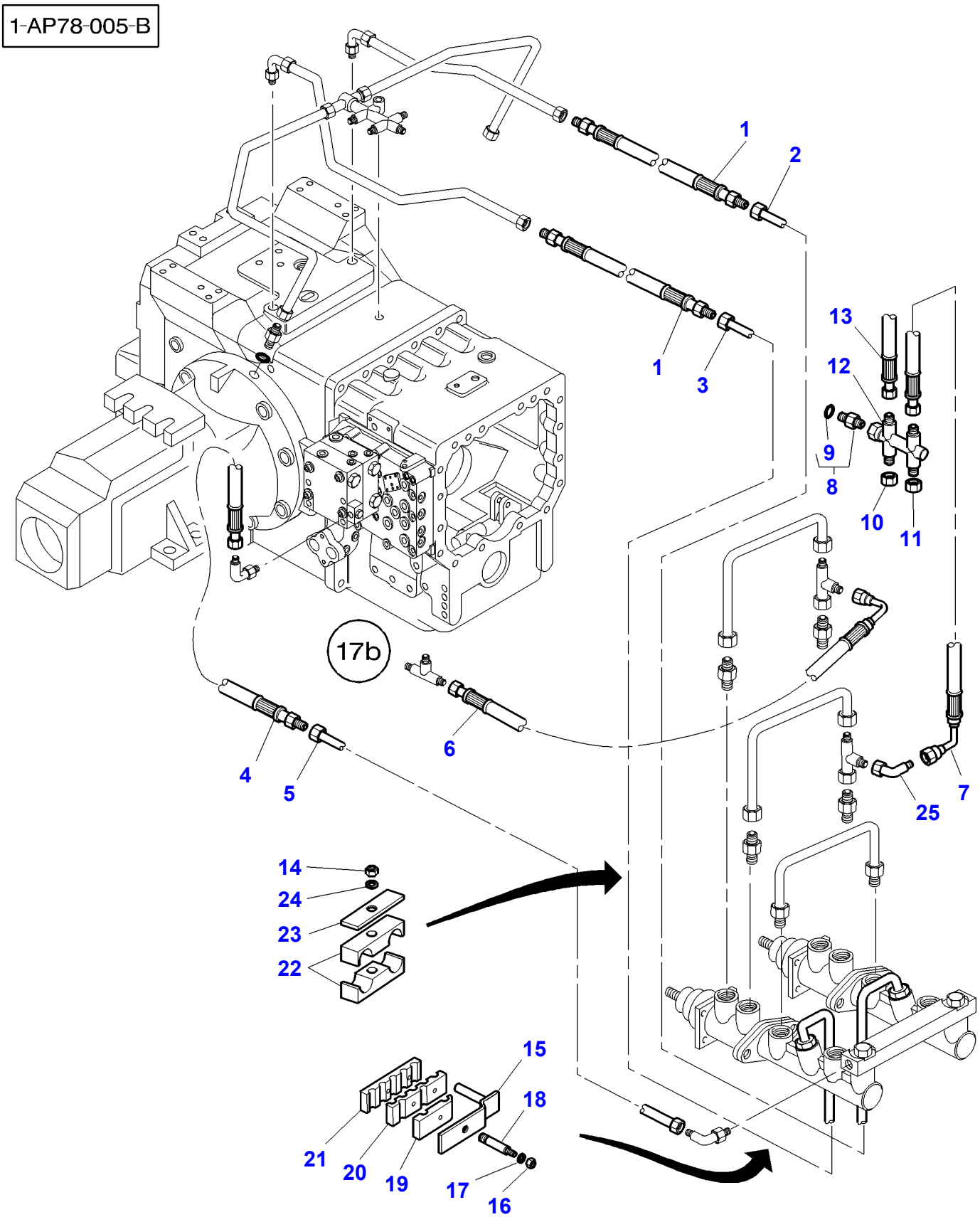
1-AP78-005-B
1
2
1
3
13
12
9
8
10
11
17b
6
4
5
7
25
14
24
23
22
15
18
21
20
19
17
16

| Item | Part Number | Qty | Description | Comments |
|---|---|---|---|---|
| 1 | 3778585M1 | 2 | Hydr Hose | |
| 2 | 3778043M3 | 1 | Tube | Left Hand |
| 3 | 3778042M2 | 1 | Tube | Right Hand |
| 4 | 3778586M1 | 1 | Hydr Hose | |
| 5 | 3779144M1 | 1 | Tube | |
| 6 | 3778664M1 | 1 | Hydr Hose | |
| 7 | 3778663M1 | 1 | Hydr Hose | |
| 8 | 3019387X91 | 1 | Union | |
| 9 | 3019398X1 | 1 | O Ring | (8) |
| 10 | 356580X1 | 1 | Plug | |
| 11 | 356579X1 | 1 | Cap | |
| 12 | 3777412M1 | 1 | Union | |
| 13 | 3779448M2 | 1 | Tube | |
| 14 | 339030X1 | 2 | Nut Metric | |
| 15 | 3778280M1 | 1 | Plate | |
| 16 | 1441500X1 | 1 | Locknut | M6 |
| 17 | 391038X1 | 3 | Washer | |
| 18 | 3715878M3 | 1 | Stud | Diameter M8/M6 |
| 19 | 3715882M1 | 1 | Bridle | |
| 20 | 3715881M1 | 1 | Bridle | |
| 21 | 3715880M1 | 1 | Bridle | |
| 22 | 3384779M1 | 4 | Bridle | |
| 23 | 1625982M2 | 2 | Plate | |
| 24 | 391038X1 | 2 | Washer | |
| 25 | 365233X1 | 1 | Elbow | |

1-AP78-008-A

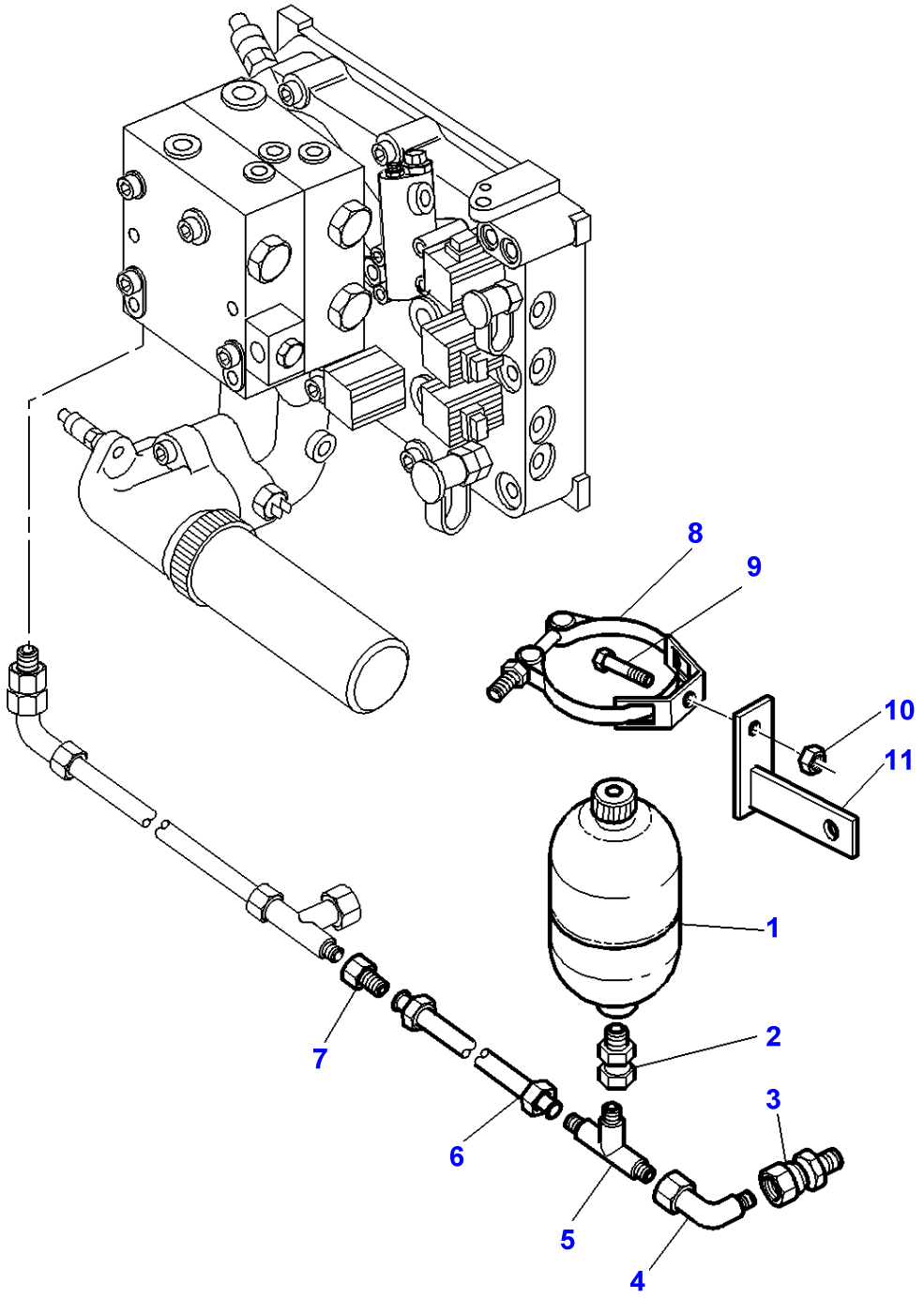

| Item | Part Number | Qty | Description | Comments |
|---|---|---|---|---|
| 1 | 3619551M1 | 1 | Accumulator | |
| 2 | 380018X1 | 1 | Connector | |
| 3 | 356627X1 | 1 | Adaptor | |
| 4 | 365233X1 | 1 | Elbow | |
| 5 | 356560X1 | 1 | Teepiece | |
| 6 | 3779862M1 | 1 | Hydr Hose | |
| 7 | 377651X1 | 1 | Reducer | |
| 8 | 3619807M1 | 1 | Bridle | |
| 9 | 339124X1 | 1 | Hex. Sock. Screw | M8X16 |
| 10 | 339169X1 | 1 | Nut | |
| 11 | 3779861M2 | 1 | Strap | |

1-AG17-002-B

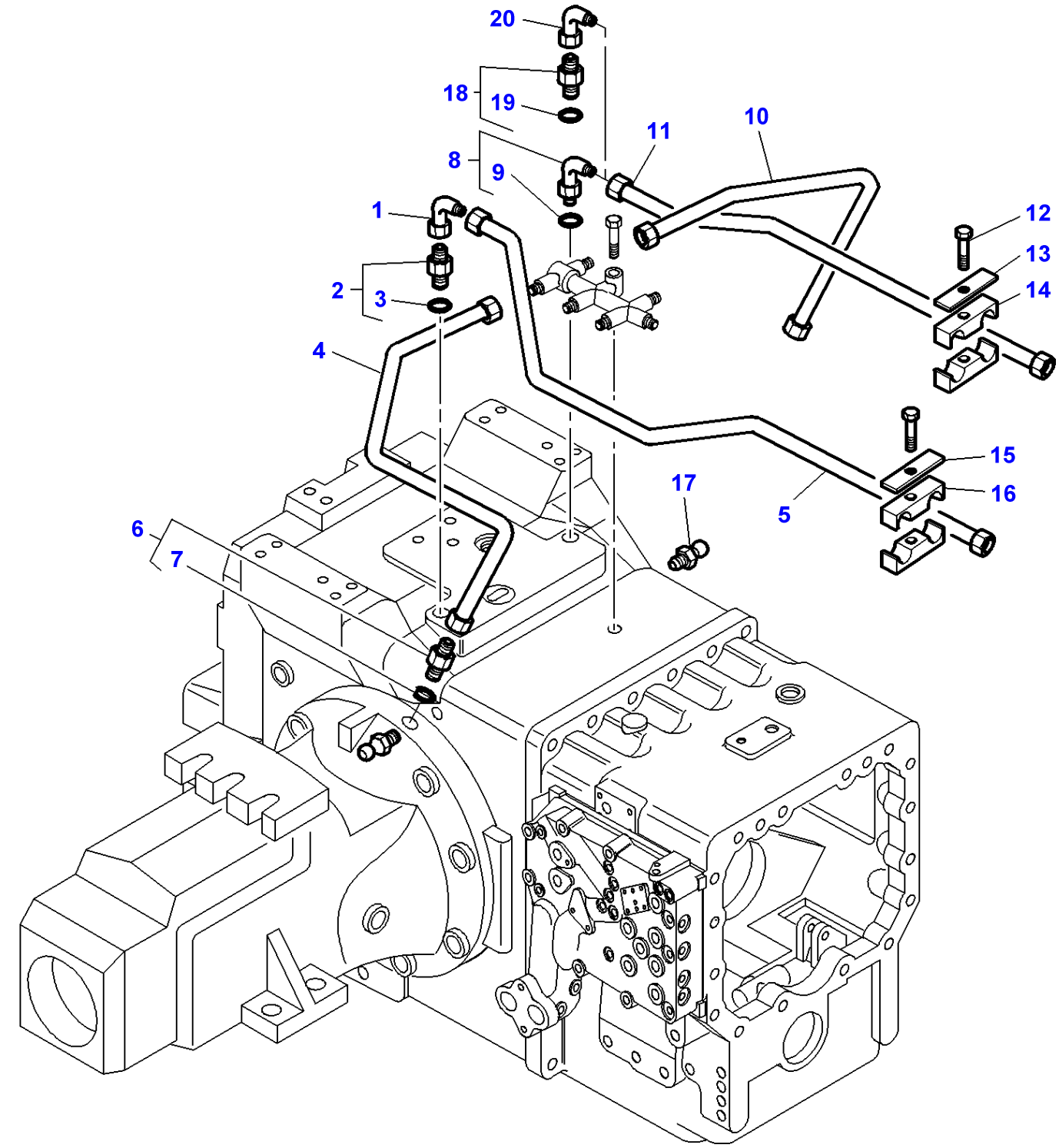

| Item | Part Number | Qty | Description | Comments |
|---|---|---|---|---|
| 1 | 373778X1 | 1 | Union | |
| 2 | 3019377X91 | 1 | Union | |
| 3 | 3019394X1 | 1 | O Ring | (2) |
| 4 | 3791200M91 | 1 | Tube | Right Hand |
| 5 | 3791194M91 | 1 | Tube | Right Hand |
| 6 | 3791282M91 | 2 | Union | |
| 7 | 3019394X1 | 1 | O Ring | (6) |
| 8 | 3019410X91 | 1 | Elbow Nipple | Up to Serial or Engine Number 09/98 |
| 9 | 3019394X1 | 1 | O Ring | (8) |
| 10 | 3791198M91 | 1 | Tube | Left Hand |
| 11 | 3791196M91 | 1 | Tube | Left Hand |
| 12 | 339337X1 | 2 | Hex. Sock. Screw | M8x30 |
| 13 | 3716911M1 | 1 | Plate | |
| 14 | 3716910M1 | 2 | Bridle | |
| 15 | 3716913M1 | 1 | Plate | |
| 16 | 3716912M1 | 2 | Bridle | |
| 17 | 3052960M1 | 2 | Banjo Bolt | |
| 18 | 3019377X91 | 1 | Union | From Serial or Engine Number 10/98 |
| 19 | 3019394X1 | 1 | O Ring | (18) |
| 20 | 373778X1 | 1 | Union | From Serial or Engine Number 10/98 |

**FOOTNOTE [A]** WITH DYNASHIFT
**FOOTNOTE [B]** WITH FULL POWERSHIFT

1-AG17-013-A

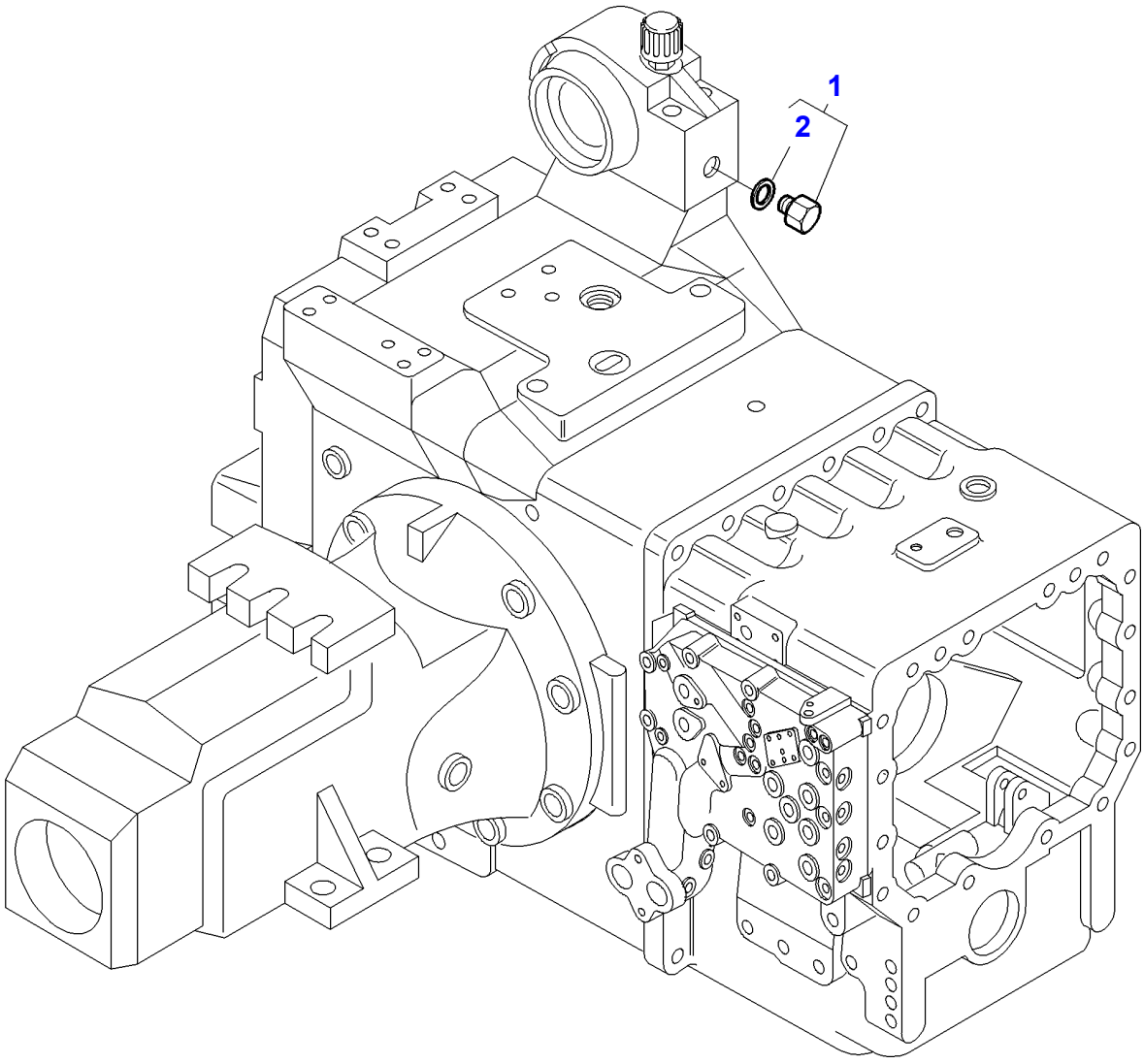

| Item | Part Number | Qty | Description | Comments |
|---|---|---|---|---|
| 1 | 3019639X91 | 1 | Plug | |
| 2 | 3019395X1 | 1 | O Ring | (1) |

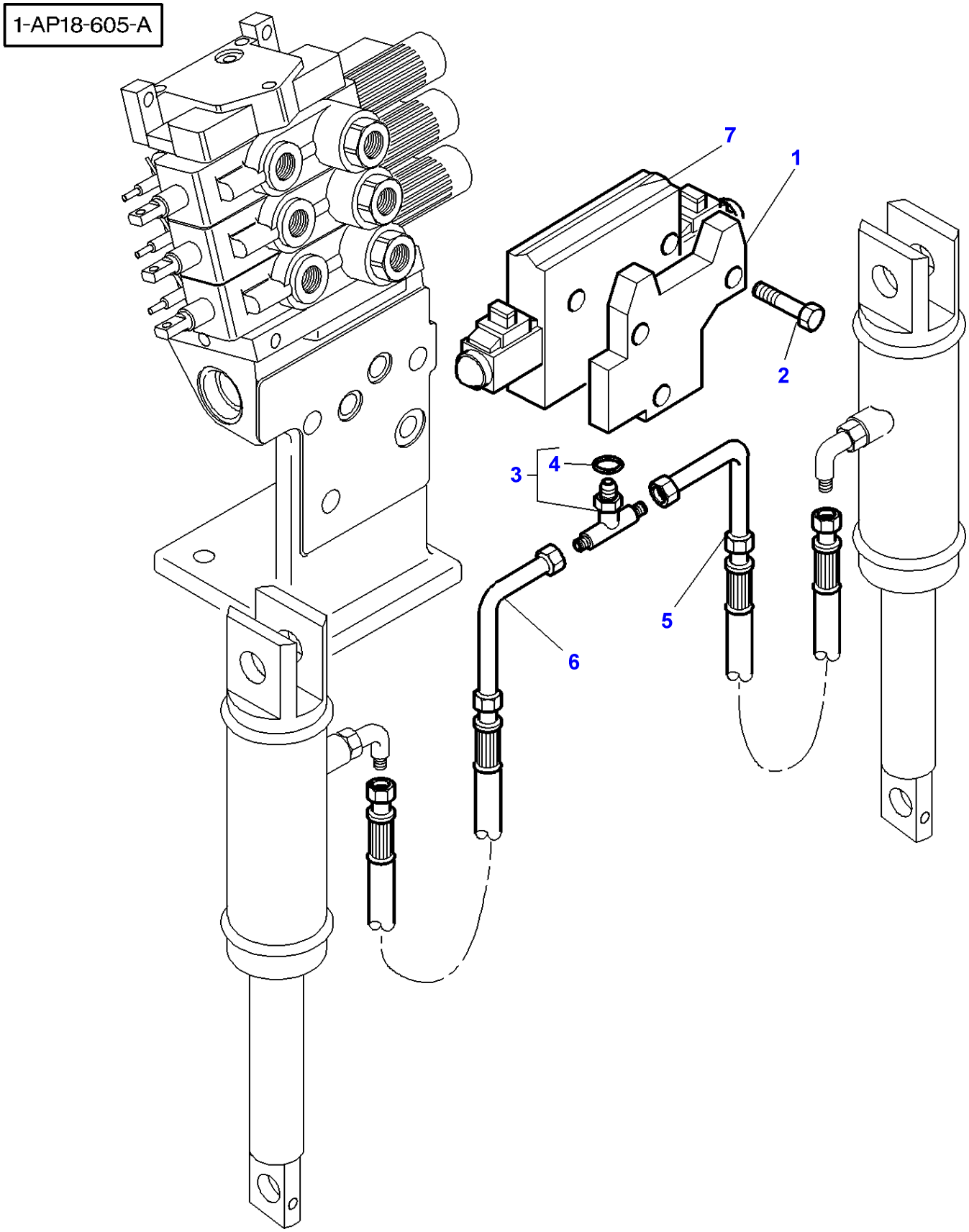
1-AP18-605-A
7
1
2
3
4
5
6

| Item | Part Number | Qty | Description | Comments |
|---|---|---|---|---|
| 1 | 3716382M1 | 1 | Plate | |
| 2 | 390246X1 | 3 | Bolt | M8X70 |
| 3 | 3019615X91 | 1 | Union | |
| 4 | 3019398X1 | 1 | O Ring | (3) |
| 5 | 3716384M1 | 1 | Tube | Right Hand |
| 6 | 3716386M1 | 1 | Tube | Left Hand |
| 7 | 3716381M1 | 1 | Pressure Valve | 110L/MN |

1-AP18-631-A

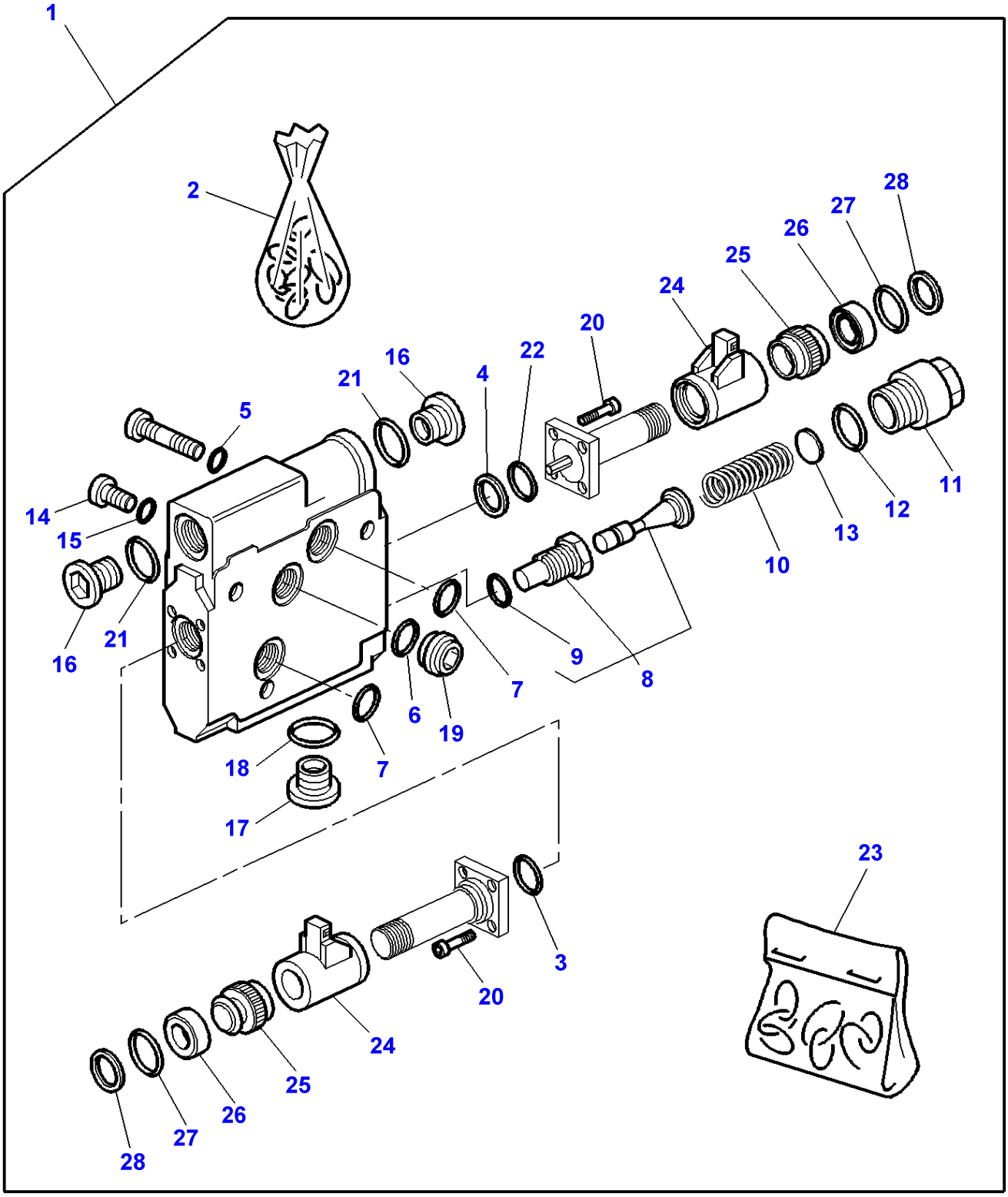

| Item | Part Number | Qty | Description | Comments |
|---|---|---|---|---|
| 1 | 3716381M1 | 1 | Pressure Valve | [A]<br>BOSCH<br>110L/MN |
| 2 | 3902938M91 | 1 | Kit, Joint | (1) |
| 3 | 3902933M1 | 1 | O Ring | (2)<br>Diameter 19X1,5MM |
| 4 | 3902934M1 | 1 | Gasket | (2) |
| 5 | 3108257M1 | 2 | O Ring | (2)<br>Diameter 5X1,5MM |
| 6 | 3108233M1 | 1 | O Ring | (2)<br>Diameter 18X2,5MM |
| 7 | 3108232M1 | 2 | O Ring | (2)<br>Diameter 20X2,5MM |
| 8 | 3108258M1 | 1 | Valve | (1) |
| 9 | 3902935M1 | 1 | O Ring | (2)<br>Diameter 10,82X1,78MM |
| 10 | 3104936M1 | 1 | Comp.Spring | (1) |
| 11 | 3902936M1 | 1 | Plug | (1) |
| 12 | | 1 | O Ring | (2)<br>Not serviced,order REF 2<br>Diameter 22X2,5MM |
| 13 | 3104724M1 | X | Shim | (1)<br>Thickness 0,8MM |
| | 1806184M1 | X | Shim | (1)<br>Thickness 0,5MM |
| | 3102069M1 | X | Shim | (1)<br>Thickness 0,4MM |
| | 3102068M1 | X | Shim | (1)<br>Thickness 0,3MM |
| 14 | 3102240M1 | 1 | Plug | (1) |
| 15 | 3108259M1 | 1 | O Ring | (2)<br>Diameter 8X2MM |
| 16 | 3902932M1 | 2 | Plug | (1) |
| 17 | 3108244M1 | 1 | Plug | (1) |
| 18 | 3108238M1 | 1 | O Ring | (1) |
| 19 | 3108248M1 | 1 | Bypass | (1) |
| 20 | 3902937M1 | 8 | Screw | (1)<br>M4X8 |
| 21 | | 2 | O Ring | (2)<br>Not serviced,order REF 2<br>Diameter 17X2,5MM |
| 22 | | 1 | O Ring | (2)<br>Not serviced,order REF 2<br>Diameter 28X2MM |
| 23 | 3901801M91 | 2 | Kit, Repair | |
| 24 | | 1 | Solenoid | (23)<br>Not serviced,order REF 23 |
| 25 | | 1 | Union Nut | (23)<br>Not serviced,order REF 23 |
| 26 | | 1 | Helmet | (23)<br>Not serviced,order REF 23 |
| 27 | | 1 | O Ring | (23)<br>Not serviced,order REF 23<br>Diameter 21X1,5MM |
| 28 | | 1 | O Ring | (23)<br>Not serviced,order REF 23<br>Diameter 20X2,5MM |

**FOOTNOTE [A]** ONLY P/NS WITH ITEMS ARE SUPPLIED IN SPARE PARTS

1-AP36-635-A

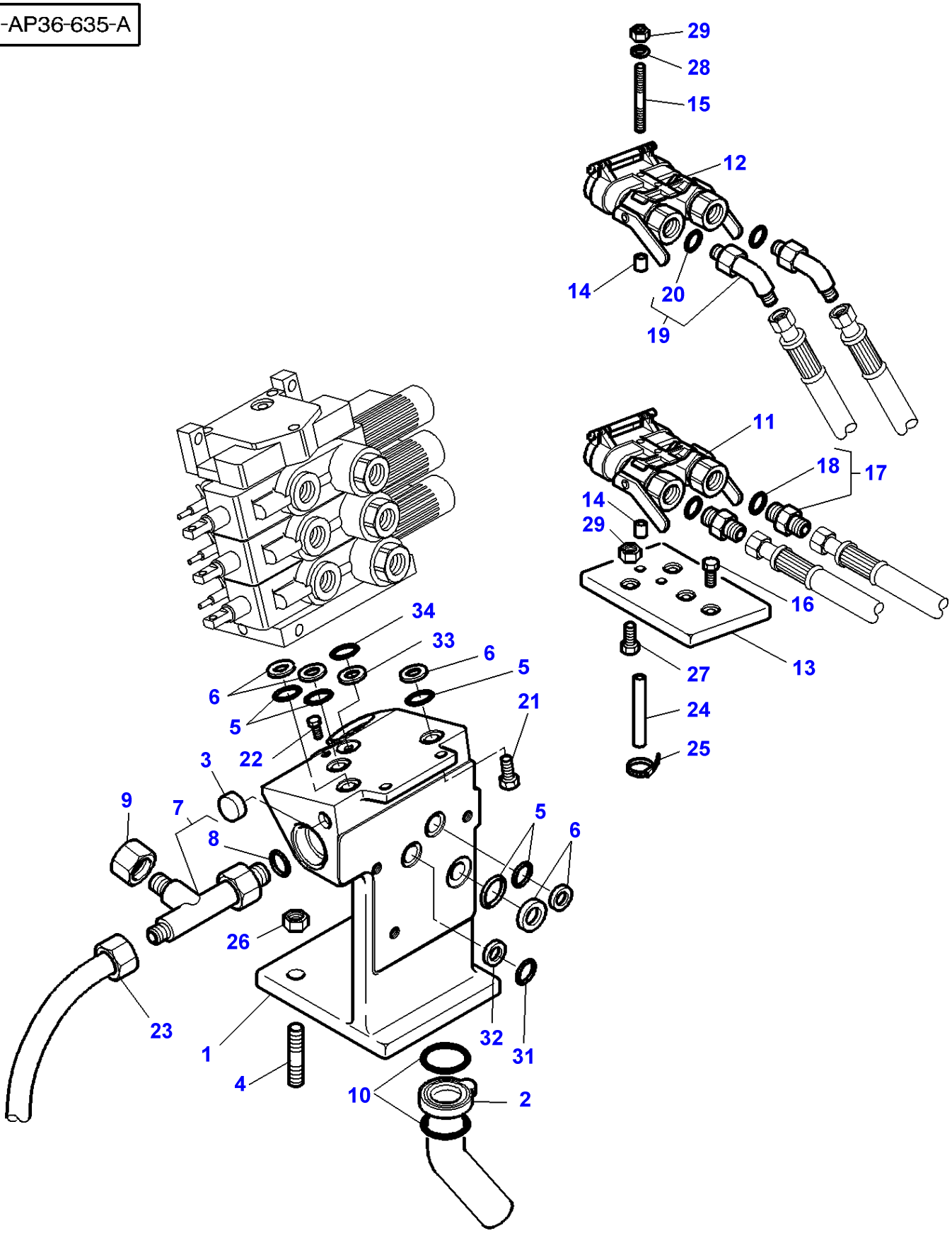
29
28
15
12
14
20
19
11
18
17
14
29
16
27
13
24
25
34
33
6
5
6
5
21
22
3
9
7
8
5
6
26
23
1
4
10
2
32
31

| Item | Part Number | Qty | Description | Comments |
|---|---|---|---|---|
| 1 | 3716900M4 | 1 | Angle | |
| 2 | 3716914M91 | 1 | Tube | |
| 3 | 3015150X1 | 2 | Plug | Diameter 24MM |
| 4 | 3791655M1 | 3 | Stud | |
| 5 | 392224X1 | 5 | O Ring | |
| 6 | 3791880M1 | 5 | Bush | Diameter 22,3 MM |
| 7 | 3019633X91 | 1 | Union | |
| 8 | 3019399X1 | 1 | O Ring | (7) |
| 9 | 356582X1 | 1 | Cap | |
| 10 | 366617X1 | 2 | O Ring | |
| 11 | 3715310M4 | 1 | Female Coupler | [C] |
| 12 | 3715311M4 | 1 | Female Coupler | [D] |
| 13 | 3716392M2 | 1 | Plate | |
| 14 | 3712546M1 | 4 | Spacer | |
| 15 | 3010787X1 | 2 | Stud | M8X138 |
| 16 | 339123X1 | 2 | Hex. Sock. Screw | M8X20 |
| 17 | 835013M91 | 2 | Union | |
| 18 | 1882958M1 | 1 | O Ring | (17) |
| 19 | 835010M91 | 2 | Elbow | |
| 20 | 1882958M1 | 1 | O Ring | (19) |
| 21 | 391991X1 | 2 | Screw Metric | M10X30 |
| 22 | 3010812X1 | 1 | Screw | M8X30 |
| 23 | 3716397M1 | 1 | Tube | [A] |
| | 3791709M1 | 1 | Tube | [F] |
| 24 | 3616713M1 | 1 | Tube | Length 1250MM |
| 25 | 3619622M1 | X | Cable Tie | |
| 26 | 3019862X1 | 3 | Nut Metric | M12 |
| 27 | 339123X1 | 2 | Hex. Sock. Screw | M8X20 |
| 28 | 390972X1 | 2 | Washer Metric | |
| 29 | 339169X1 | 2 | Nut | M8 |
| 30 | 339169X1 | 2 | Nut | M8 |
| 31 | 1442477X1 | 1 | Gasket | |
| 32 | 3791884M2 | 1 | Bush | |
| 33 | 1441133X1 | 1 | Gasket | |
| 34 | 3791879M1 | 1 | Bush | |

**FOOTNOTE [A]** WITH PUMP 45CC
**FOOTNOTE [B]** WITHOUT HYDRAULIC LIFT
**FOOTNOTE [C]** BLACK
**FOOTNOTE [D]** RED
**FOOTNOTE [F]** WITH PUMP 60CC

1-AP36-618-B

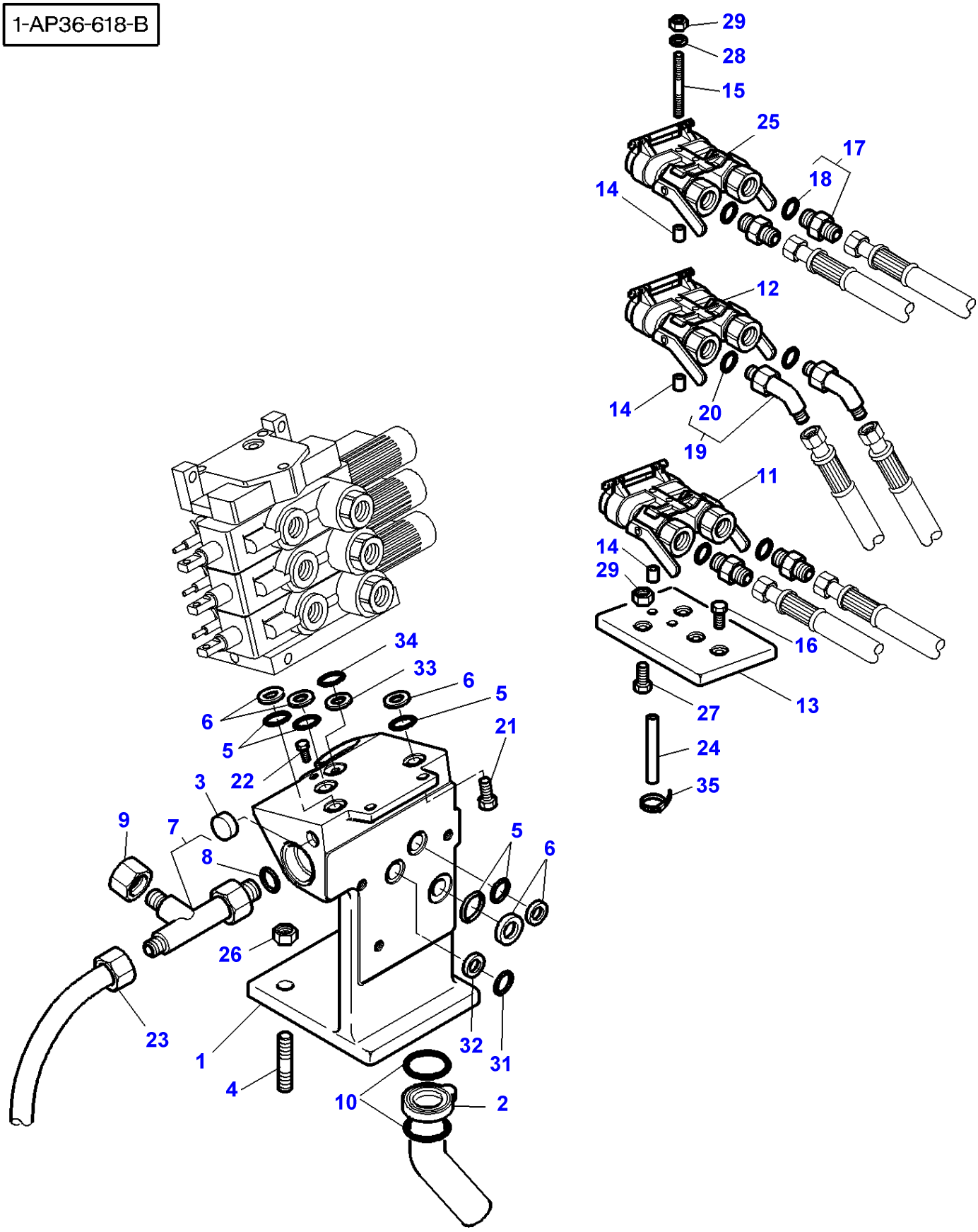
29
28
15
25
17
18
14
12
14
20
19
11
14
29
16
13
27
24
35
34
33
6
5
6
5
21
3
22
9
7
8
5
6
26
23
1
4
10
2
32
31

| Item | Part Number | Qty | Description | Comments |
|---|---|---|---|---|
| 1 | 3716900M4 | 1 | Angle | |
| 2 | 3716914M91 | 1 | Tube | |
| 3 | 3015150X1 | 2 | Plug | Diameter 24MM |
| 4 | 3791655M1 | 3 | Stud | |
| 5 | 392224X1 | 5 | O Ring | |
| 6 | 3791880M1 | 5 | Bush | Diameter 22,3 MM |
| 7 | 3019633X91 | 1 | Union | |
| 8 | 3019399X1 | 1 | O Ring | (7) |
| 9 | 356582X1 | 1 | Cap | |
| 10 | 366617X1 | 2 | O Ring | |
| 11 | 3715310M4 | 1 | Female Coupler | [C] |
| 12 | 3715311M4 | 1 | Female Coupler | [D] |
| 13 | 3716392M2 | 1 | Plate | |
| 14 | 3712546M1 | 6 | Spacer | |
| 15 | 3010788X1 | 2 | Stud | M8X200 |
| 16 | 339123X1 | 2 | Hex. Sock. Screw | M8X20 |
| 17 | 835013M91 | 4 | Union | |
| 18 | 1882958M1 | 1 | O Ring | (17) |
| 19 | 835010M91 | 2 | Elbow | |
| 20 | 1882958M1 | 1 | O Ring | (19) |
| 21 | 391991X1 | 2 | Screw Metric | M10X30 |
| 22 | 3010812X1 | 1 | Screw | M8X30 |
| 23 | 3716397M1 | 1 | Tube | [A] |
| | 3791709M1 | 1 | Tube | [B] |
| 24 | 3616713M1 | X | Tube | |
| 25 | 3715313M4 | 1 | Female Coupler | [E] |
| 26 | 3019862X1 | 3 | Nut Metric | M12 |
| 27 | 339123X1 | 2 | Hex. Sock. Screw | M8X20 |
| 28 | 390972X1 | 2 | Washer Metric | |
| 29 | 339169X1 | 2 | Nut | M8 |
| 30 | 339169X1 | 2 | Nut | M8 |
| 31 | 1442477X1 | 1 | Gasket | |
| 32 | 3791884M2 | 1 | Bush | |
| 33 | 1441133X1 | 1 | Gasket | |
| 34 | 3791879M1 | 1 | Bush | |
| 35 | 3619622M1 | X | Cable Tie | |

**FOOTNOTE [A]** WITH PUMP 45CC
**FOOTNOTE [B]** WITH PUMP 60CC
**FOOTNOTE [C]** BLACK
**FOOTNOTE [D]** RED
**FOOTNOTE [E]** GREEN

1-AP36-625-A

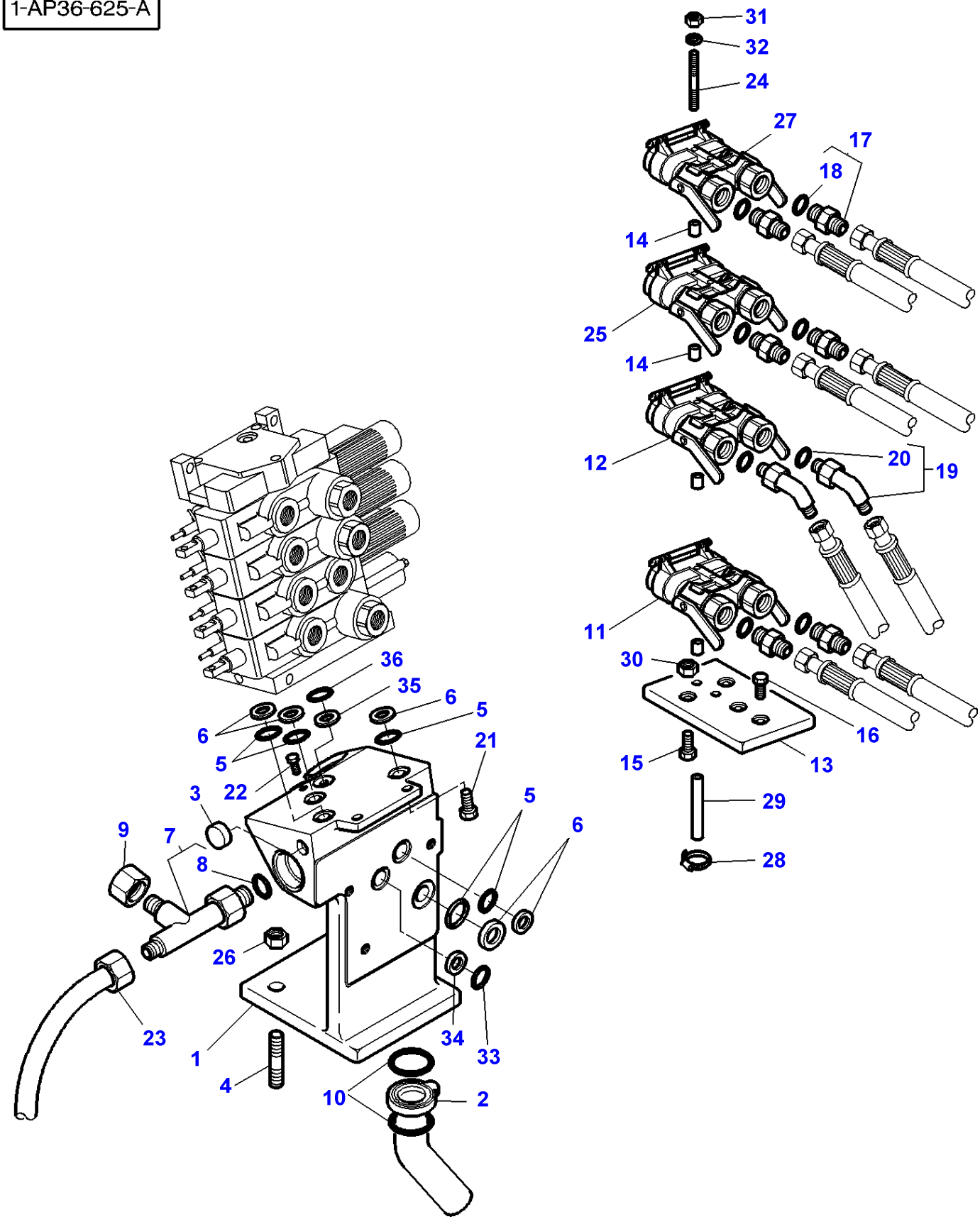
31
32
24
27
17
18
14
25
14
12
20
19
11
30
16
15
13
29
28
36
35
6
5
6
5
21
3
22
5
6
9
7
8
26
23
1
4
34
33
10
2

| Item | Part Number | Qty | Description | Comments |
|---|---|---|---|---|
| 1 | 3716900M4 | 1 | Angle | |
| 2 | 3716914M91 | 1 | Tube | |
| 3 | 3015150X1 | 2 | Plug | Diameter 24MM |
| 4 | 3791655M1 | 3 | Stud | M12 |
| 5 | 392224X1 | 5 | O Ring | |
| 6 | 3791880M1 | 5 | Bush | Diameter 22,3MM |
| 7 | 3019633X91 | 1 | Union | |
| 8 | 3019399X1 | 1 | O Ring | (7) |
| 9 | 356582X1 | 1 | Cap | |
| 10 | 366617X1 | 2 | O Ring | |
| 11 | 3715310M4 | 1 | Female Coupler | [C] |
| 12 | 3715311M4 | 1 | Female Coupler | [D] |
| 13 | 3716392M2 | 1 | Plate | |
| 14 | 3712546M1 | 8 | Spacer | |
| 15 | 339123X1 | 2 | Hex. Sock. Screw | M8X20 |
| 16 | 339123X1 | 2 | Hex. Sock. Screw | M8X20 |
| 17 | 835013M91 | 6 | Union | |
| 18 | 1882958M1 | 1 | O Ring | (17) |
| 19 | 835010M91 | 2 | Elbow | |
| 20 | 1882958M1 | 1 | O Ring | (19) |
| 21 | 391991X1 | 2 | Screw Metric | M10X30 |
| 22 | 3010812X1 | 1 | Screw | M8X30 |
| 23 | 3716397M1 | 1 | Tube | [B] |
| | 3791709M1 | 1 | Tube | [F] |
| 24 | 3010789X1 | 2 | Stud | M8X262 |
| 25 | 3715313M4 | 1 | Female Coupler | [E] |
| 26 | 3019862X1 | 3 | Nut Metric | M12 |
| 27 | 3715312M4 | 1 | Female Coupler | [A] |
| 28 | 3619622M1 | X | Cable Tie | |
| 29 | 3616713M1 | 1 | Tube | Length 1250MM |
| 30 | 339169X1 | 2 | Nut | |
| 31 | 339169X1 | 2 | Nut | |
| 32 | 390972X1 | 2 | Washer Metric | |
| 33 | 1442477X1 | 1 | Gasket | |
| 34 | 3791884M2 | 1 | Bush | |
| 35 | 3791879M1 | 1 | Bush | |
| 36 | 1441133X1 | 1 | Gasket | |

**FOOTNOTE [A]** YELLOW
**FOOTNOTE [B]** WITH PUMP 45CC
**FOOTNOTE [C]** BLACK
**FOOTNOTE [D]** RED
**FOOTNOTE [E]** GREEN
**FOOTNOTE [F]** WITH PUMP 60CC

1-AP77-001-B

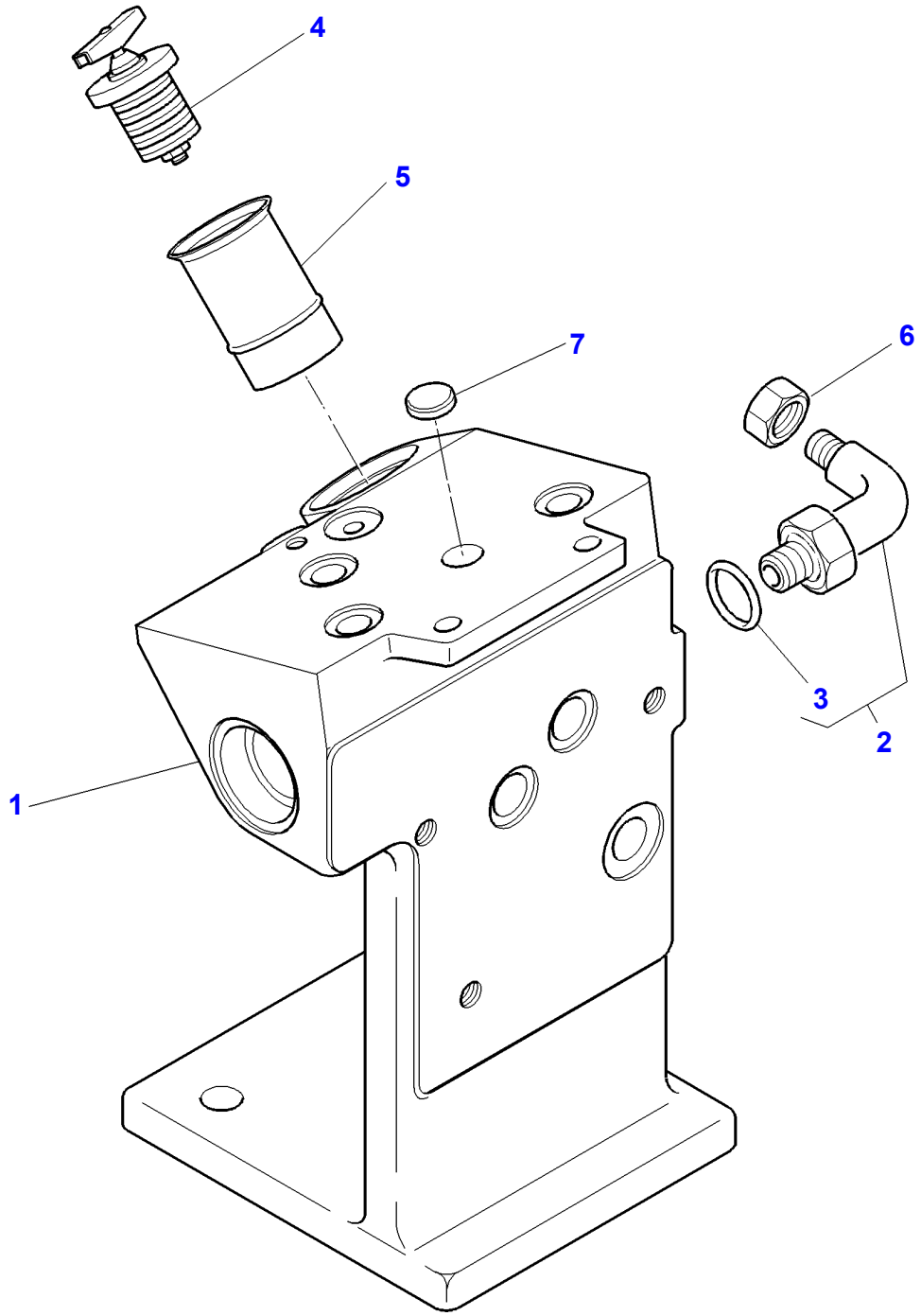

| Item | Part Number | Qty | Description | Comments |
|---|---|---|---|---|
| 1 | 3716900M4 | 1 | Angle | |
| 2 | 3019420X91 | 1 | Union | |
| 3 | 3019398X1 | 1 | O Ring | (2) |
| 4 | **3791288M1** | 1 | Plug | |
| 5 | 3791466M2 | 1 | Tube | |
| 6 | 355782X1 | 1 | Plug | |
| 7 | 391563X1 | 1 | Plug | Diameter 16MM |

1-AP40-600-F

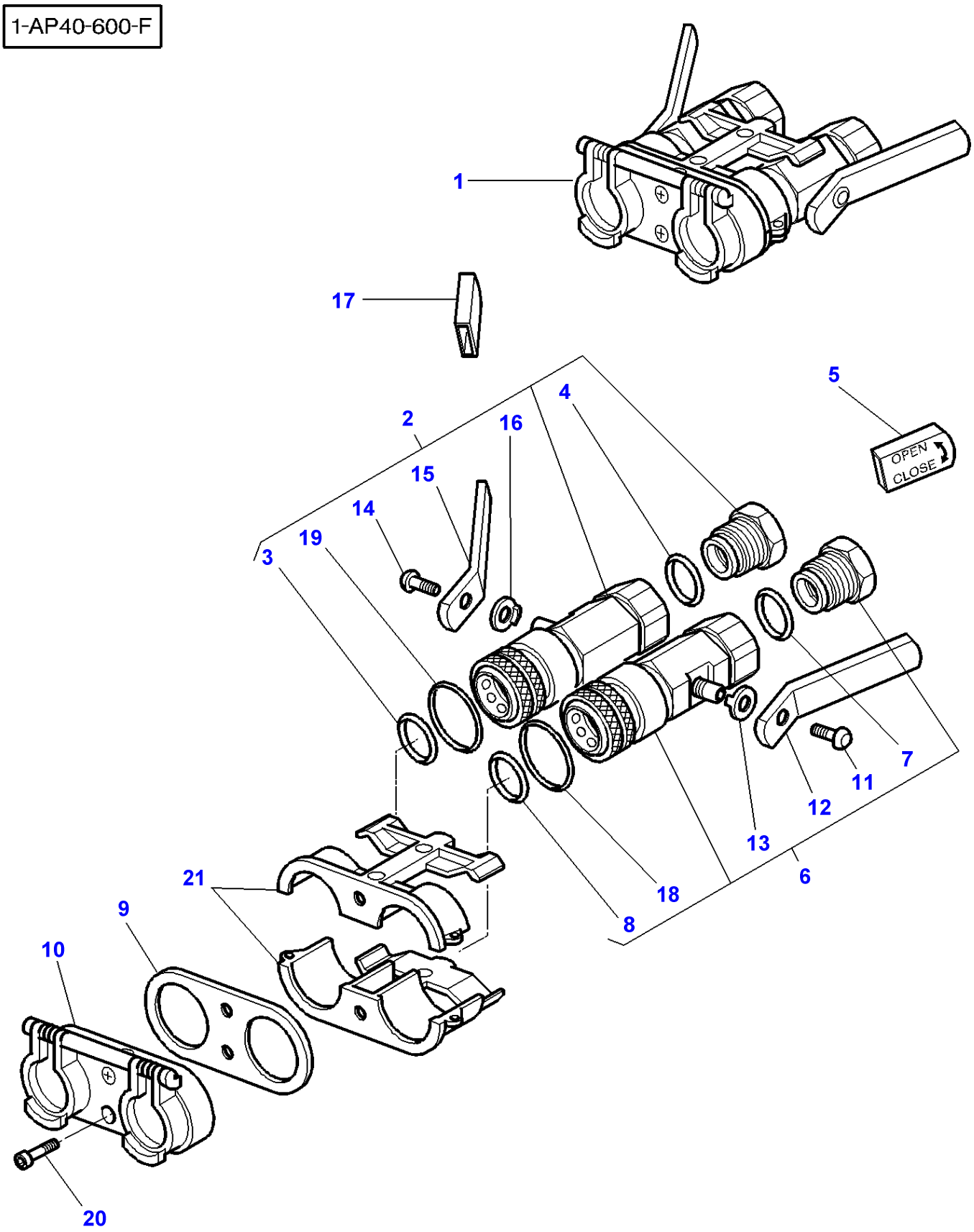

| Item | Part Number | Qty | Description | Comments |
|---|---|---|---|---|
| 1 | 3715310M4 | 1 | Female Coupler | [A] |
| | 3715311M4 | 1 | Female Coupler | [B] |
| | 3715313M4 | 1 | Female Coupler | [C] |
| | 3715312M4 | 1 | Female Coupler | [D] |
| 2 | **3902108M92** | 1 | Female Coupler | (1)<br>Left Hand |
| 3 | **359297X1** | 1 | Ring | (2)<br>Replace and repair. Old not interchangeable with new 3902143M1 |
| 4 | **1889915M1** | 1 | O Ring | (2)<br>Replace and repair. Old not interchangeable with new 3902193M1 |
| 5 | 3902110M1 | 1 | Muff | [A]<br>(1)<br>Right Hand |
| | 3902495M1 | 1 | Muff | [B]<br>(1)<br>Right Hand |
| | 3902497M1 | 1 | Muff | [C]<br>(1)<br>Right Hand |
| | 3902793M1 | 1 | Muff | [D]<br>(1)<br>Right Hand |
| 6 | **3902107M92** | 1 | Female Coupler | (1)<br>Right Hand |
| 7 | **1889915M1** | 1 | O Ring | (6)<br>Replace and repair. Old not interchangeable with new 3902193M1 |
| 8 | **359297X1** | 1 | Ring | (6)<br>Replace and repair. Old not interchangeable with new 3902143M1 |
| 9 | 3902111M1 | 1 | Gasket | (1) |
| 10 | 3902491M91 | 1 | Cover | [A]<br>(1) |
| | 3902489M91 | 1 | Cover | [B]<br>(1) |
| | 3902490M91 | 1 | Cover | [C]<br>(1) |
| | 3902792M1 | 1 | Cover | [D]<br>(1) |
| 11 | | 1 | Screw | (6)<br>Not serviced,order REF No 6 |
| 12 | | 1 | Lever | (6)<br>Not serviced,order REF No 6 |
| 13 | | 1 | Washer | (6)<br>Not serviced,order REF No 6 |
| 14 | | 1 | Screw | (2)<br>Not serviced,order REF No 2 |
| 15 | | 1 | Lever | (2)<br>Not serviced,order REF No 2 |
| 16 | | 1 | Screw | (2)<br>Not serviced,order REF No 2 |
| 17 | 3902109M1 | 1 | Muff | [A]<br>(1)<br>Left Hand |
| | 3902494M1 | 1 | Muff | [B]<br>(1)<br>Left Hand |
| | 3902496M1 | 1 | Muff | [C]<br>(1)<br>Left Hand |
| | 3902493M1 | 1 | Muff | [D]<br>Left Hand |
| 18 | 364777X1 | 1 | O Ring | (6) |
| 19 | 364777X1 | 1 | O Ring | (2) |
| 20 | 3902772M1 | 2 | Screw | (1) |
| 21 | 72163347 | 2 | Clamp | (1) |

**FOOTNOTE [A]** BLACK
**FOOTNOTE [B]** RED
**FOOTNOTE [C]** GREEN
**FOOTNOTE [D]** YELLOW
**FOOTNOTE [E]** NUMBER TO BE ADVISED

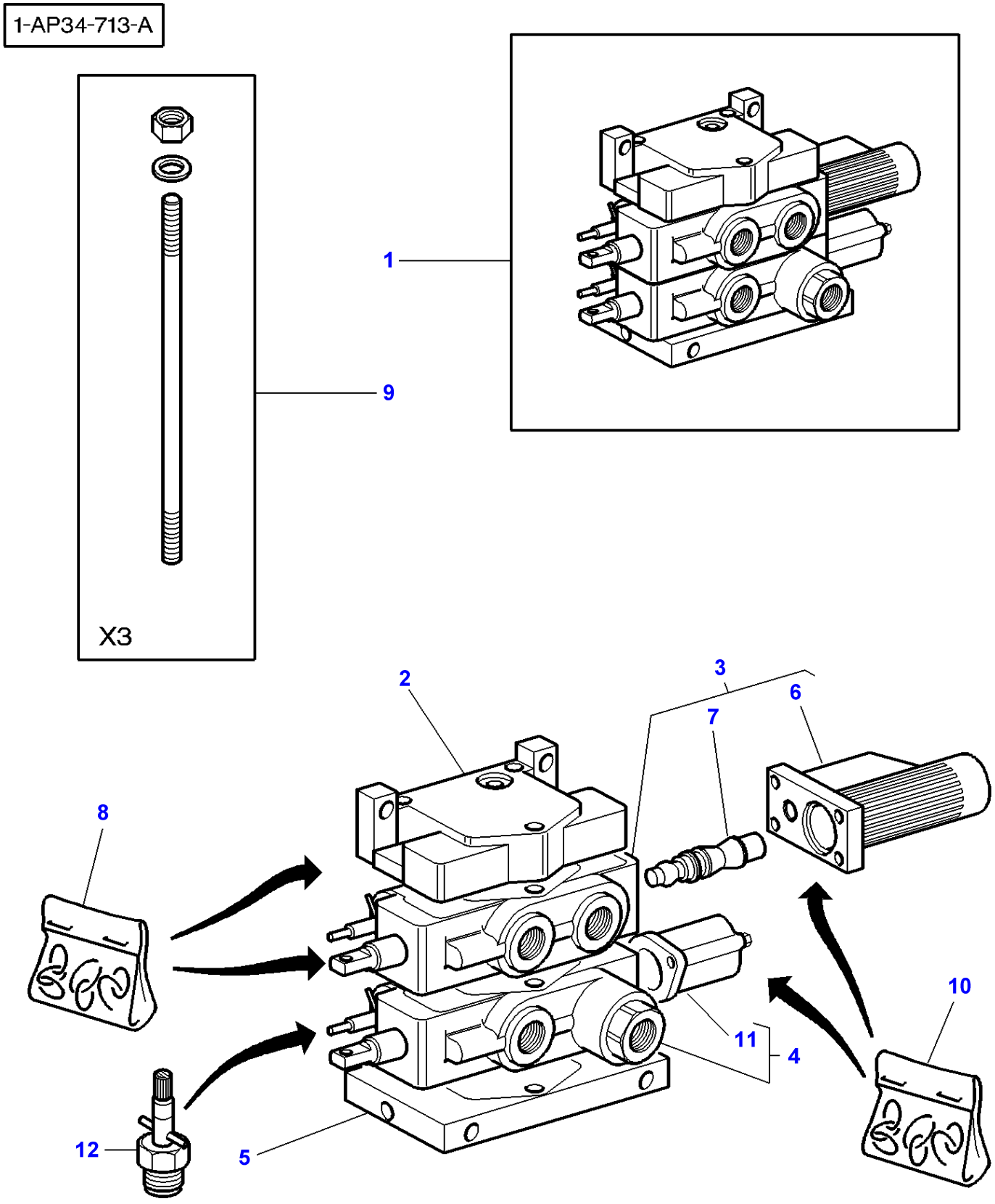
1-AP34-713-A
1
9
X3
2
3
6
7
8
10
11
4
12
5

| Item | Part Number | Qty | Description | Comments |
|---|---|---|---|---|
| 1 | 3716317M91 | 1 | Distributor | |
| 2 | 3716316M1 | 1 | Element | (1) |
| 3 | 3902062M92 | 1 | Distributor | [A] (1) |
| 4 | 3902063M91 | 1 | Distributor | [B] (1) |
| 5 | 3716314M1 | 1 | Element | (1) |
| 6 | 3902797M91 | 1 | Protector | (3) |
| 7 | 3790773M11 | 1 | Kit, Service | (3) |
| 8 | 3902067M91 | 1 | Kit, Joint | (1) |
| 9 | 3902732M91 | 1 | Parts Pack | (1) |
| 10 | 3902066M91 | 1 | Kit, Joint | (1) |
| 11 | 3902813M91 | 1 | Protector | (4) |
| 12 | 3790797M11 | 1 | Kit, Service | (1) |

**FOOTNOTE [A]** DIST 4 FLOATING POSITIONS ,FLOW ADJUST,KICK-OUT,W/ O, ZERO LEAK
**FOOTNOTE [B]** DIST 3 FLOATING POSITIONS,RETURN BY SPRING,FLOW AD JUST,ZERO LEAK

1-AP36-628-A

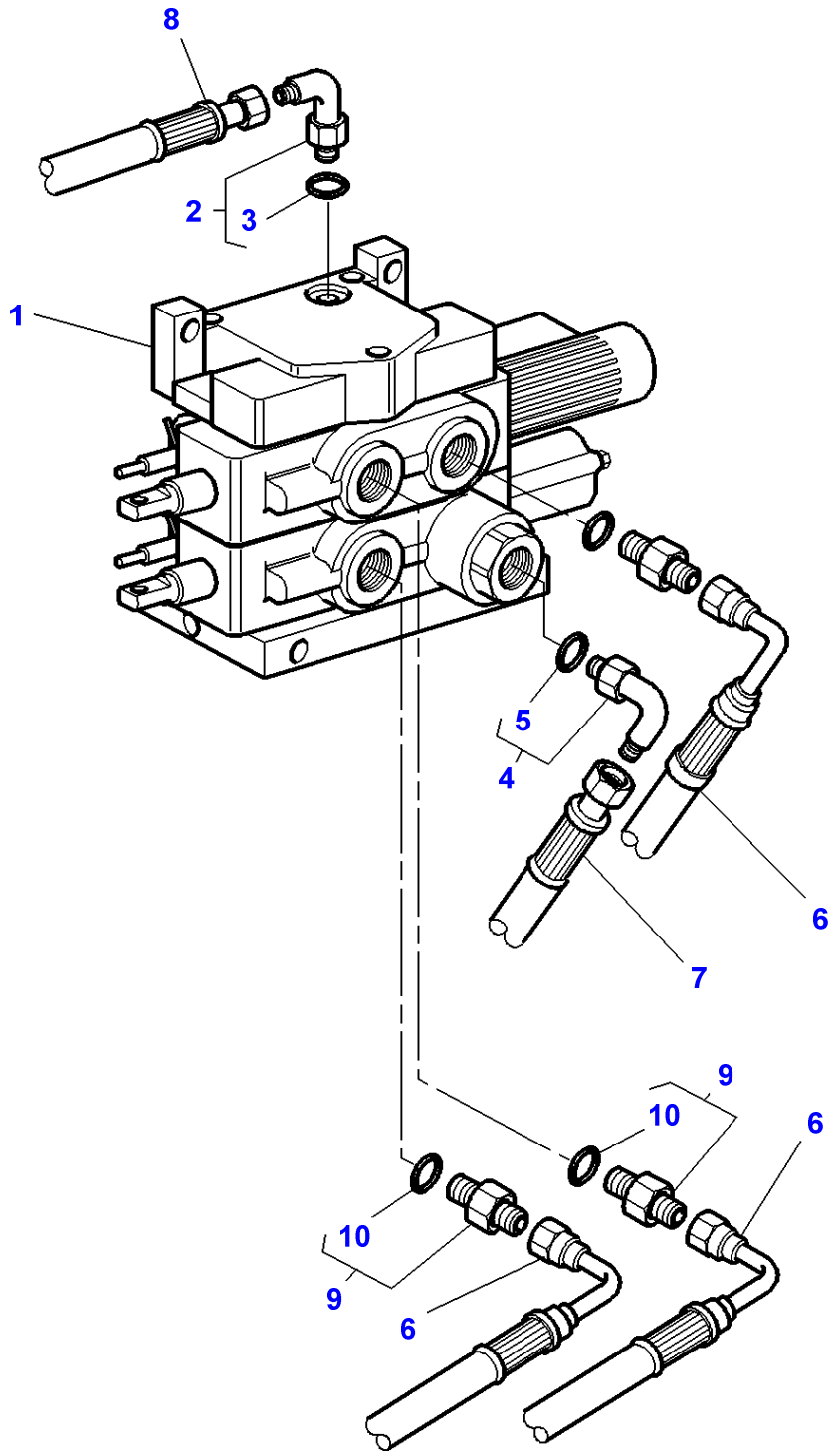

| Item | Part Number | Qty | Description | Comments |
|---|---|---|---|---|
| 1 | 3716317M91 | 1 | Distributor | |
| 2 | 357197X91 | 1 | Elbow | |
| 3 | **831452M1** | 1 | O Ring | (2) |
| 4 | 380031X91 | 1 | Union | |
| 5 | 1882958M1 | 1 | O Ring | (4) |
| 6 | 3712540M1 | 3 | Hydr Hose | Length 650MM |
| 7 | 3583591M1 | 1 | Hydr Hose | Length 690MM |
| 8 | 3716398M1 | 1 | Hydr Hose | [A] |
| | 3792042M1 | 1 | Hydr Hose | [B] Length 1400MM |
| 9 | 835013M91 | 3 | Union | |
| 10 | 1882958M1 | 1 | O Ring | (9) |

**FOOTNOTE [A]** WITH PUMP 45CC
**FOOTNOTE [B]** WITH PUMP 60CC

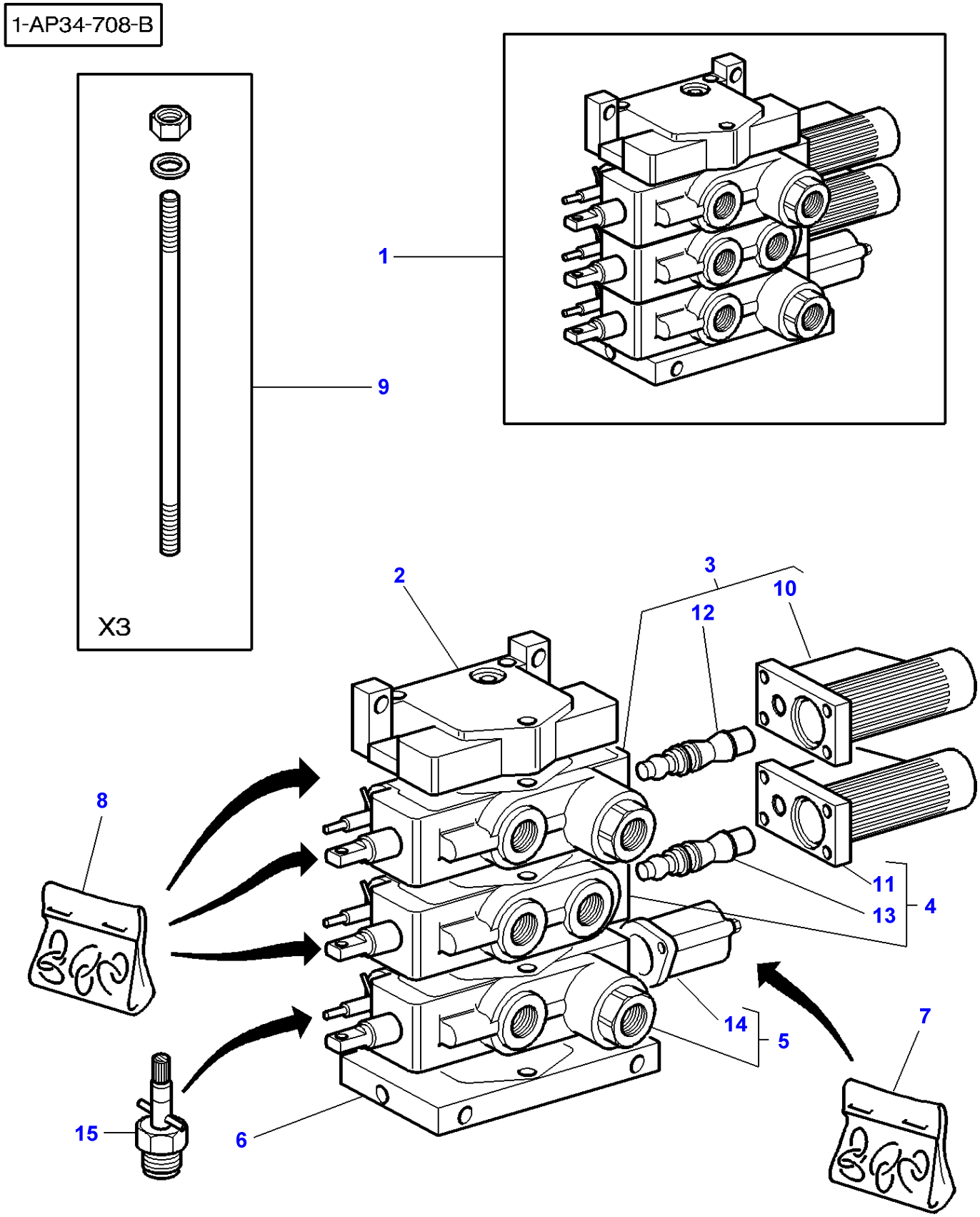
1-AP34-708-B
X3
1
9
2
3
10
12
8
11
13
4
14
5
7
15
6

| Item | Part Number | Qty | Description | Comments |
|---|---|---|---|---|
| 1 | 3716318M91 | 1 | Distributor | |
| 2 | 3716316M1 | 1 | Element | (1) |
| 3 | 3713928M3 | 1 | Distributor | [C] (1) |
| 4 | 3902062M92 | 1 | Distributor | [A] (1) |
| 5 | 3902063M91 | 1 | Distributor | [B] (1) |
| 6 | 3716314M1 | 1 | Element | (1) |
| 7 | 3902066M91 | 1 | Kit, Joint | (1) |
| 8 | 3902067M91 | 1 | Kit, Joint | (1) |
| 9 | 3716366M1 | 1 | Parts Pack | (1) |
| 10 | 3902797M91 | 1 | Protector | (3) |
| 11 | 3902797M91 | 1 | Protector | (4) |
| 12 | 3790773M11 | 1 | Kit, Service | (3) |
| 13 | 3790773M11 | 1 | Kit, Service | (4) |
| 14 | 3902813M91 | 1 | Protector | (5) |
| 15 | 3790797M11 | 1 | Kit, Service | |

**FOOTNOTE [A]** DIST 4 FLOATING POSITIONS ,FLOW ADJUST,KICK-OUT,W/ O, ZERO LEAK
**FOOTNOTE [B]** DIST 3 FLOATING POSITIONS,RETURN BY SPRING,FLOW AD JUST,ZERO LEAK
**FOOTNOTE [C]** 4 FLOATING POSITIONS DIST,FLOW ADJUST,KICK-OUT,ZER O LEAK

1-AP36-620-A

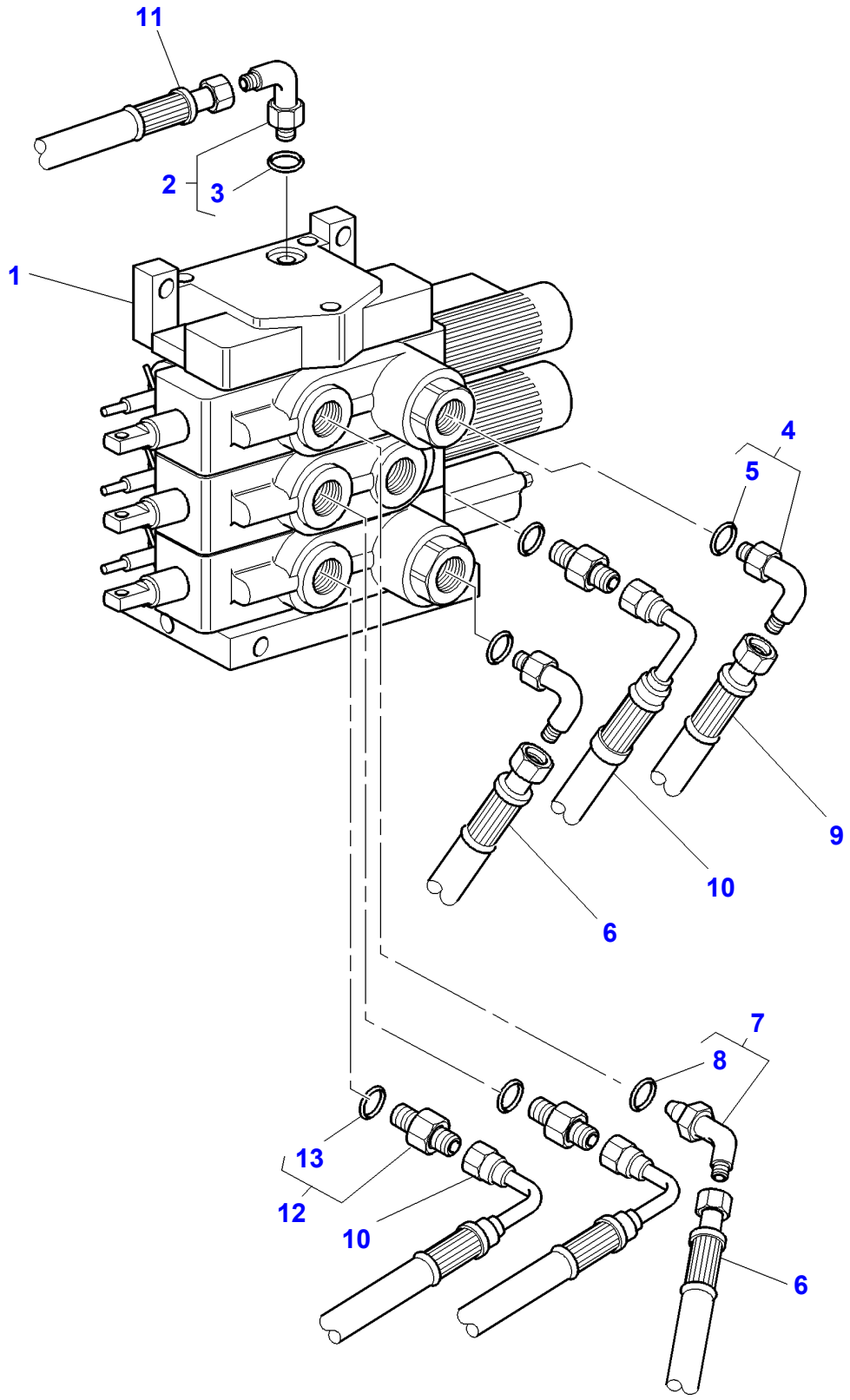

| Item | Part Number | Qty | Description | Comments |
|---|---|---|---|---|
| 1 | 3716318M91 | 1 | Distributor | |
| 2 | 357197X91 | 1 | Elbow | |
| 3 | **831452M1** | 1 | O Ring | (2) |
| 4 | 380031X91 | 2 | Union | |
| 5 | 1882958M1 | 1 | O Ring | (4) |
| 6 | 3583591M1 | 2 | Hydr Hose | Length 690MM |
| 7 | 835010M91 | 1 | Elbow | |
| 8 | 1882958M1 | 1 | O Ring | (7) |
| 9 | 3714951M1 | 1 | Hydr Hose | Length 500MM |
| 10 | 3712540M1 | 3 | Hydr Hose | Length 650MM |
| 11 | 3716398M1 | 1 | Hydr Hose | [A] |
| | 3792042M1 | 1 | Hydr Hose | [B] Length 1400MM |
| 12 | 835013M91 | 3 | Union | |
| 13 | 1882958M1 | 1 | O Ring | (12) |

**FOOTNOTE [A]** WITH PUMP 45CC
**FOOTNOTE [B]** WITH PUMP 60CC

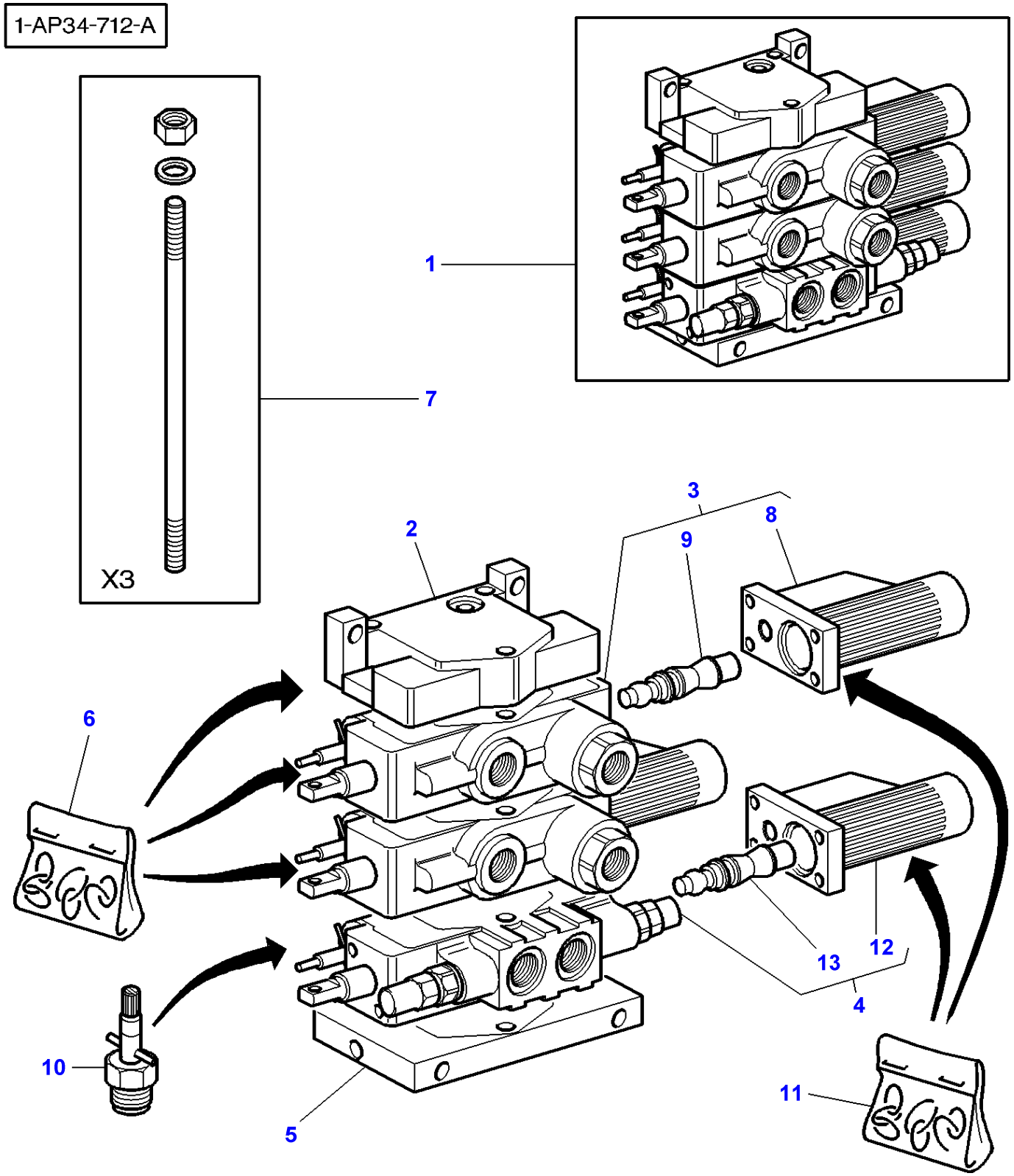
1-AP34-712-A
X3
1
7
2
3
8
9
6
10
5
4
11
12
13

| Item | Part Number | Qty | Description | Comments |
|---|---|---|---|---|
| 1 | 3716319M91 | 1 | Distributor | |
| 2 | 3716316M1 | 1 | Element | (1) |
| 3 | 3713928M3 | 2 | Distributor | [A] (1) |
| 4 | 3713927M3 | 1 | Distributor | [B] (1) |
| 5 | 3716314M1 | 1 | Element | (1) |
| 6 | 3902067M91 | 1 | Kit, Joint | (1) |
| 7 | 3716366M1 | 1 | Parts Pack | (1) |
| 8 | 3902797M91 | 1 | Protector | (3) |
| 9 | 3790773M11 | 1 | Kit, Service | (3) |
| 10 | 3790797M11 | 1 | Kit, Service | (1) |
| 11 | 3902066M91 | 1 | Kit, Joint | (1) |
| 12 | 3902797M91 | 1 | Protector | (4) |
| 13 | 3790773M11 | 1 | Kit, Service | (4) |

**FOOTNOTE [A]** 4 FLOATING POSITIONS DIST,FLOW ADJUST,KICK-OUT,ZER O LEAK
**FOOTNOTE [B]** 4 FLOAT POSIT DIST,FLOW ADJUST,KICK-OUT W 2 OVERP RES.VALVE AND RESUPPLYING FOR HYDRAULIC MOTOR

1-AP36-629-A

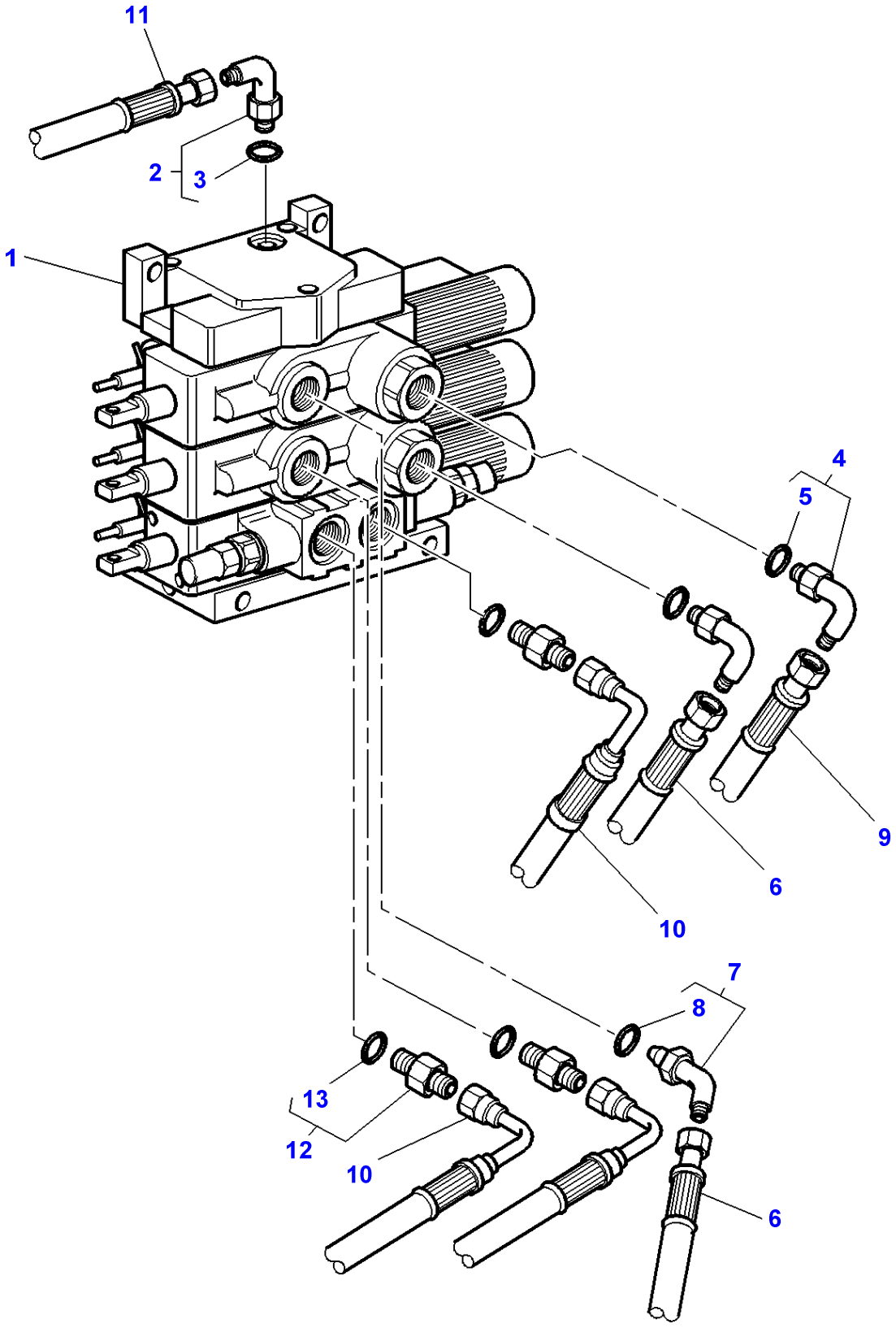

| Item | Part Number | Qty | Description | Comments |
|---|---|---|---|---|
| 1 | 3716319M91 | 1 | Distributor | |
| 2 | 357197X91 | 1 | Elbow | |
| 3 | **831452M1** | 1 | O Ring | (2) |
| 4 | 380031X91 | 2 | Union | |
| 5 | 1882958M1 | 1 | O Ring | (4) |
| 6 | 3583591M1 | 2 | Hydr Hose | Length 690MM |
| 7 | 835010M91 | 1 | Elbow | |
| 8 | 1882958M1 | 1 | O Ring | (7) |
| 9 | 3714951M1 | 1 | Hydr Hose | Length 500MM |
| 10 | 3712540M1 | 3 | Hydr Hose | Length 650MM |
| 11 | 3716398M1 | 1 | Hydr Hose | [A] |
| | 3792042M1 | 1 | Hydr Hose | [B] Length 1400MM |
| 12 | 835013M91 | 3 | Union | |
| 13 | 1882958M1 | 1 | O Ring | (12) |

**FOOTNOTE [A]** WITH PUMP 45CC
**FOOTNOTE [B]** WITH PUMP 60CC

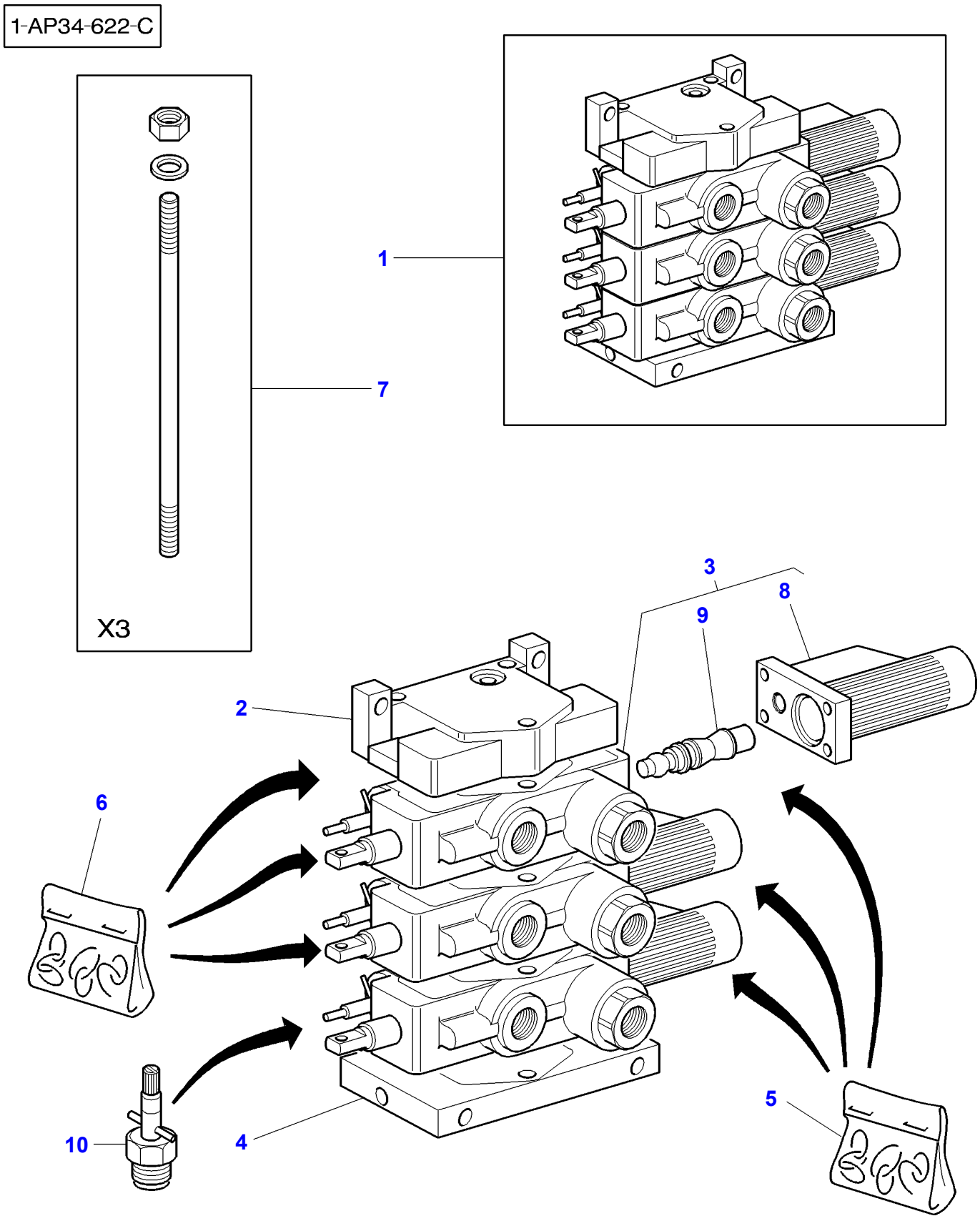
1-AP34-622-C
1
7
X3
3
8
9
2
6
10
4
5

| Item | Part Number | Qty | Description | Comments |
|---|---|---|---|---|
| 1 | 3716320M91 | 1 | Distributor | |
| 2 | 3716316M1 | 1 | Element | (1) |
| 3 | 3713928M3 | 3 | Distributor | [A] (1) |
| 4 | 3716314M1 | 1 | Element | (1) |
| 5 | 3902066M91 | 1 | Kit, Joint | (1) |
| 6 | 3902067M91 | 1 | Kit, Joint | (1) |
| 7 | 3716366M1 | 1 | Parts Pack | (1) |
| 8 | 3902797M91 | 1 | Protector | (3) |
| 9 | 3790773M11 | 1 | Kit, Service | (3) |
| 10 | 3790797M11 | 1 | Kit, Service | (3) |

**FOOTNOTE [A]** 4 FLOATING POSITIONS DIST,FLOW ADJUST,KICK-OUT,ZER O LEAK

1-AP36-619-A

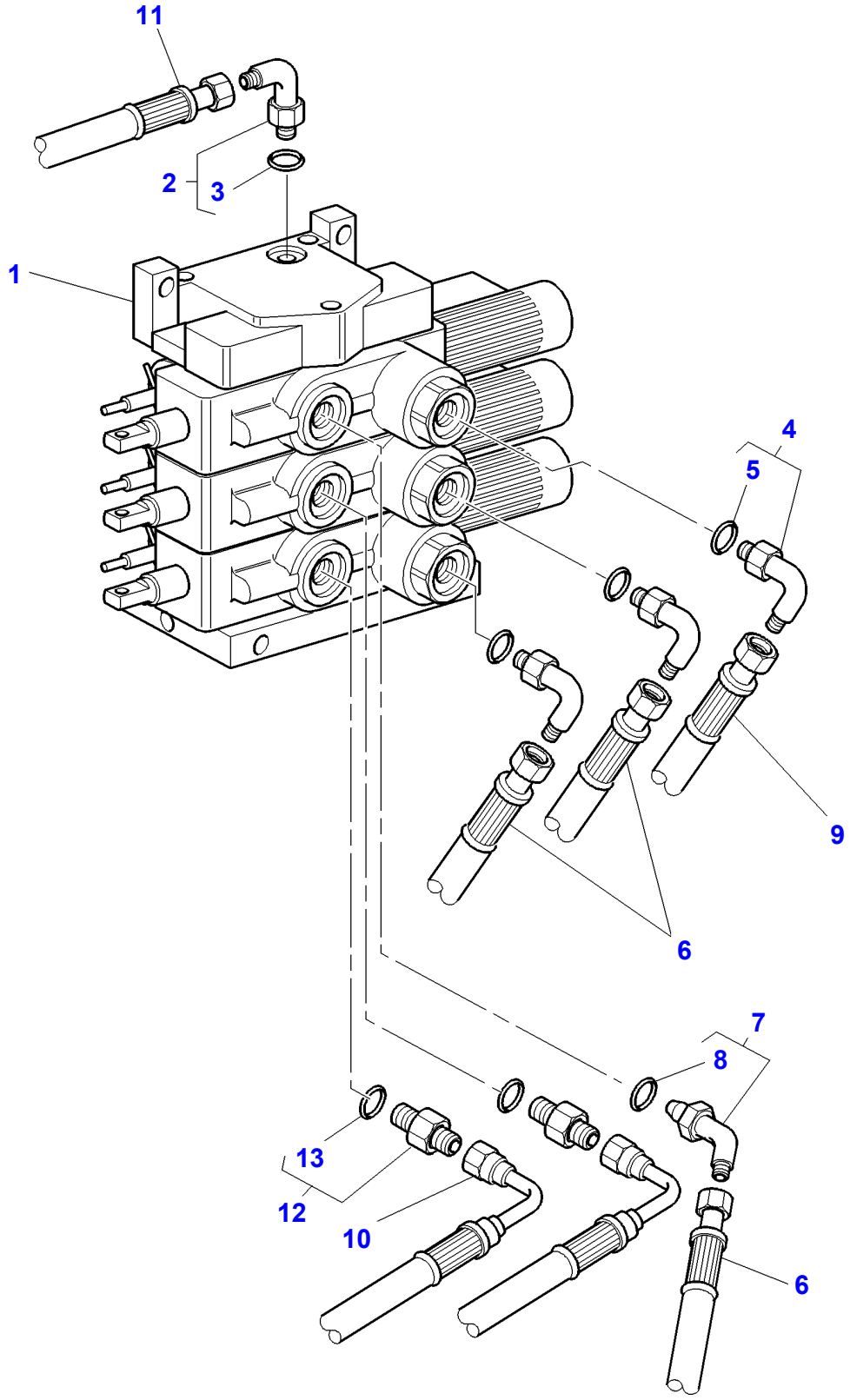

| Item | Part Number | Qty | Description | Comments |
|---|---|---|---|---|
| 1 | 3716320M91 | 1 | Distributor | |
| 2 | 357197X91 | 1 | Elbow | |
| 3 | **831452M1** | 1 | O Ring | (2) |
| 4 | 380031X91 | 3 | Union | 7/88-14 |
| 5 | 1882958M1 | 1 | O Ring | (4) |
| 6 | 3583591M1 | 3 | Hydr Hose | Length 690MM |
| 7 | 835010M91 | 1 | Elbow | |
| 8 | 1882958M1 | 1 | O Ring | (7) |
| 9 | 3714951M1 | 1 | Hydr Hose | Length 500MM |
| 10 | 3712540M1 | 2 | Hydr Hose | Length 650MM |
| 11 | 3716398M1 | 1 | Hydr Hose | [A] |
| | 3792042M1 | 1 | Hydr Hose | [B] Length 1400MM |
| 12 | 835013M91 | 2 | Union | |
| 13 | 1882958M1 | 1 | O Ring | (12) |

**FOOTNOTE [A]** WITH PUMP 45CC
**FOOTNOTE [B]** WITH PUMP 60CC

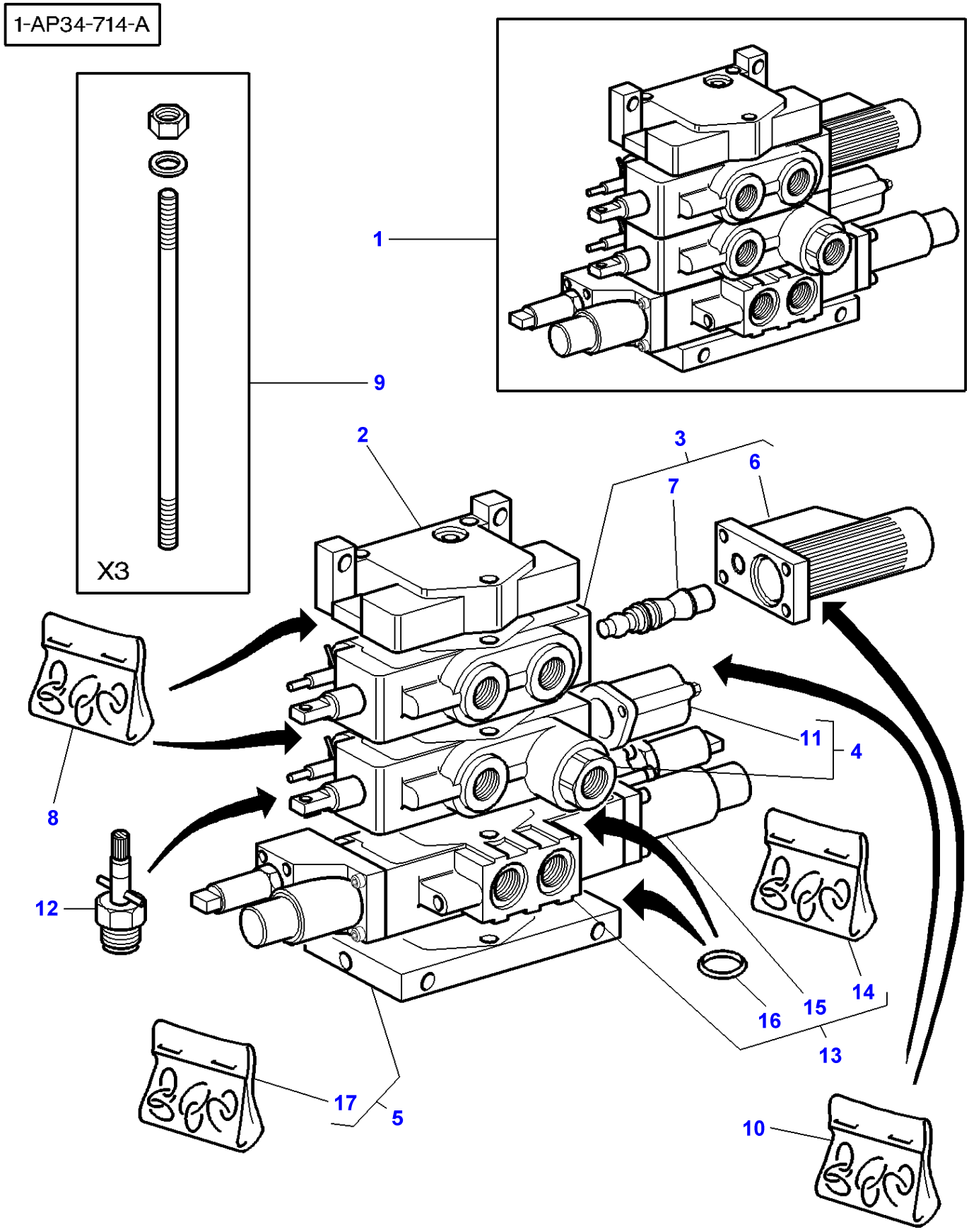
1-AP34-714-A
X3
1
9
2
3
6
7
11
4
8
12
14
15
16
13
17
5
10

| Item | Part Number | Qty | Description | Comments |
|---|---|---|---|---|
| 1 | 3716321M91 | 1 | Distributor | |
| 2 | 3716316M1 | 1 | Element | (1) |
| 3 | 3902062M92 | 1 | Distributor | [A] (1) |
| 4 | 3902063M91 | 1 | Distributor | [B] (1) |
| 5 | 3716315M1 | 1 | Element | (1) |
| 6 | 3902797M91 | 1 | Protector | (3) |
| 7 | 3790773M11 | 1 | Kit, Service | (3) |
| 8 | 3902067M91 | 1 | Kit, Joint | (1) |
| 9 | 3716366M1 | 1 | Parts Pack | (1) |
| 10 | 3902066M91 | 1 | Kit, Joint | (1) |
| 11 | 3902813M91 | 1 | Protector | (4) |
| 12 | 3790797M11 | 2 | Kit, Service | (1) |
| 13 | 3715122M1 | 1 | Pressure Valve | [C] (1) |
| 14 | 3902734M91 | 1 | Kit, Joint | (13) |
| 15 | 3900512M92 | 2 | Pressure Valve | (13) |
| 16 | 359288X1 | 4 | Seal | (13) |
| 17 | 3902733M91 | 1 | Kit, Joint | (5) |

**FOOTNOTE [A]** DIST 4 FLOATING POSITIONS ,FLOW ADJUST,KICK-OUT,W/ O, ZERO LEAK
**FOOTNOTE [B]** DIST 3 FLOATING POSITIONS,RETURN BY SPRING,FLOW AD JUST,ZERO LEAK
**FOOTNOTE [C]** DIST 3 FLOATING POSITIONS,AUTOMATIC KICK-OUT(BY SP RING),FLOW ADJUST,ELECTRIC CONTROL

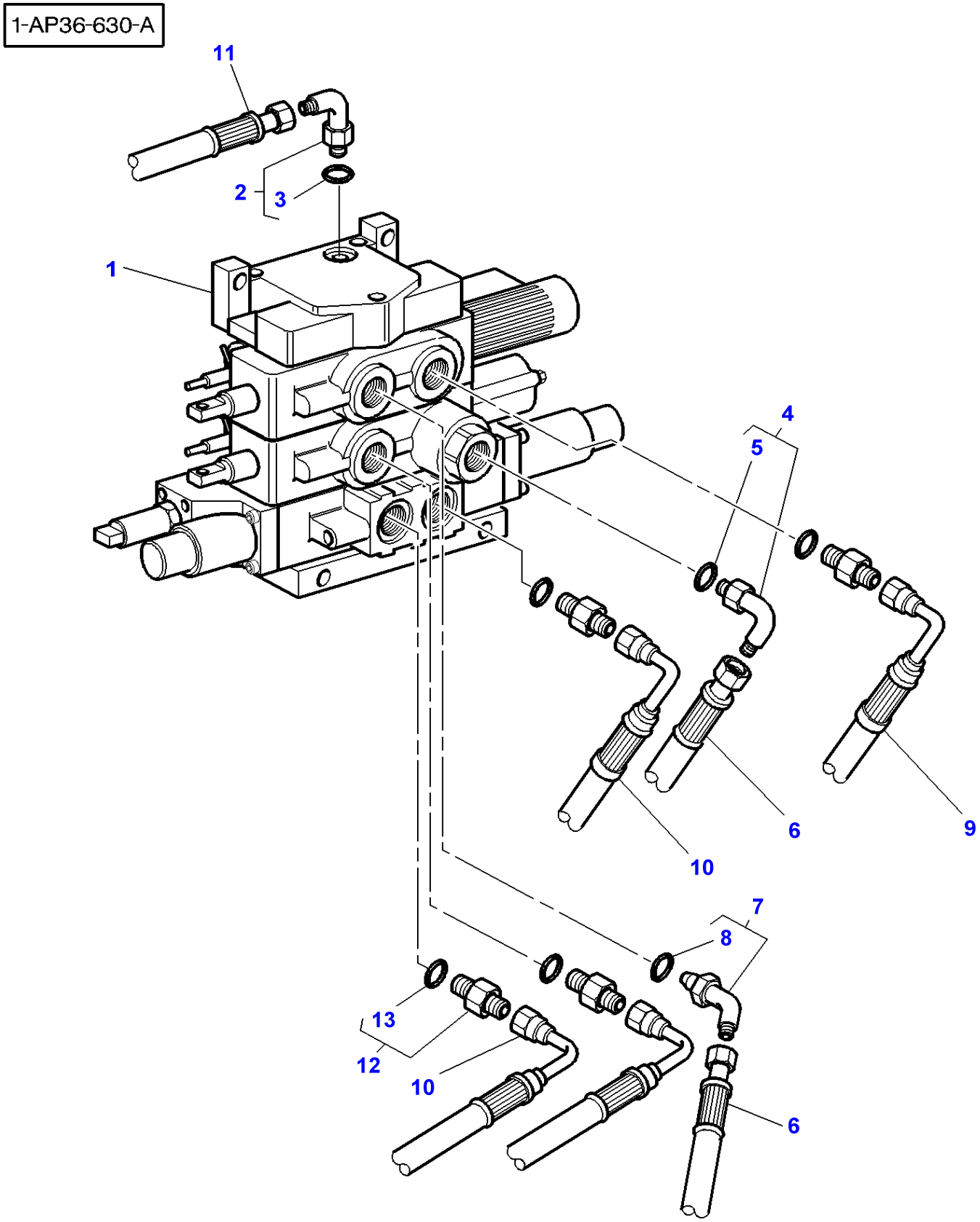
1-AP36-630-A
11
2
3
1
4
5
6
9
10
7
8
13
12
10
6

| Item | Part Number | Qty | Description | Comments |
|---|---|---|---|---|
| 1 | 3716321M91 | 1 | Distributor | |
| 2 | 357197X91 | 1 | Elbow | |
| 3 | **831452M1** | 1 | O Ring | (2) |
| 4 | 380031X91 | 1 | Union | |
| 5 | 1882958M1 | 1 | O Ring | (4) |
| 6 | 3583591M1 | 2 | Hydr Hose | Length 690MM |
| 7 | 835010M91 | 1 | Elbow | |
| 8 | 1882958M1 | 1 | O Ring | (7) |
| 9 | 3714955M1 | 1 | Hydr Hose | Length 500MM |
| 10 | 3712540M1 | 3 | Hydr Hose | Length 650MM |
| 11 | 3716398M1 | 1 | Hydr Hose | [A] |
| | 3792042M1 | 1 | Hydr Hose | [B] Length 1400MM |
| 12 | 835013M91 | 3 | Union | |
| 13 | 1882958M1 | 1 | O Ring | (12) |

**FOOTNOTE [A]** WITH PUMP 45CC
**FOOTNOTE [B]** WITH PUMP 60CC

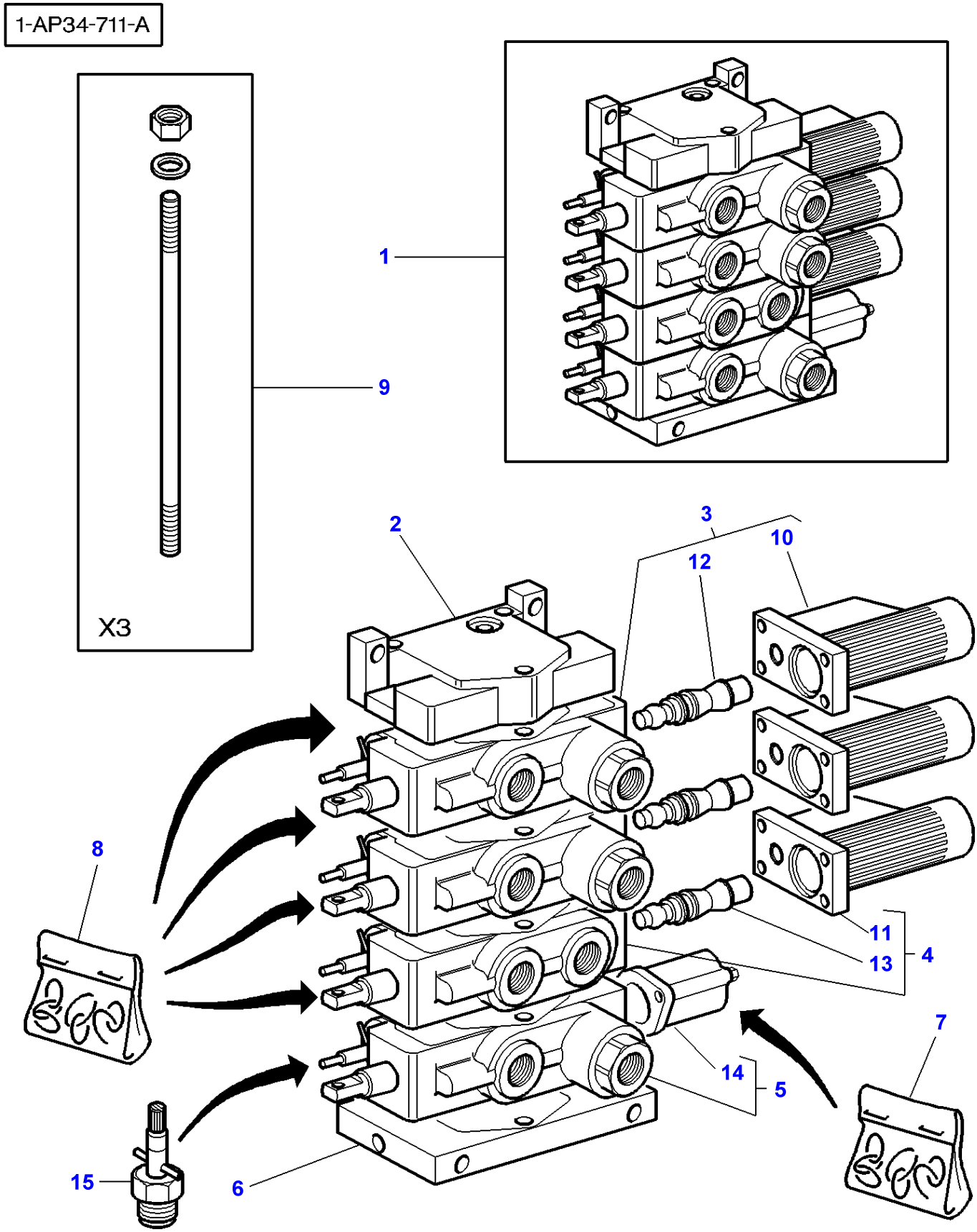
1-AP34-711-A
X3
1
9
2
3
10
12
8
11
13
4
7
14
5
15
6

| Item | Part Number | Qty | Description | Comments |
|---|---|---|---|---|
| 1 | 3716322M91 | 1 | Distributor | |
| 2 | 3716316M1 | 1 | Element | (1) |
| 3 | 3713928M3 | 2 | Distributor | [C] (1) |
| 4 | 3902062M92 | 1 | Distributor | [A] (1) |
| 5 | 3902063M91 | 1 | Distributor | [B] (1) |
| 6 | 3716314M1 | 1 | Element | (1) |
| 7 | 3902066M91 | 1 | Kit, Joint | (1) |
| 8 | 3902067M91 | 1 | Kit, Joint | (1) |
| 9 | 3716367M1 | 1 | Parts Pack | (1) |
| 10 | 3902797M91 | 1 | Protector | (3) |
| 11 | 3902797M91 | 1 | Protector | (4) |
| 12 | 3790773M11 | 1 | Kit, Service | (3) |
| 13 | 3790773M11 | 1 | Kit, Service | (4) |
| 14 | 3902813M91 | 1 | Protector | (5) |
| 15 | 3790797M11 | 4 | Kit, Service | (1) |

**FOOTNOTE [A]** DIST 4 FLOATING POSITIONS ,FLOW ADJUST,KICK-OUT,W/ O, ZERO LEAK
**FOOTNOTE [B]** DIST 3 FLOATING POSITIONS,RETURN BY SPRING,FLOW AD JUST,ZERO LEAK
**FOOTNOTE [C]** 4 FLOATING POSITIONS DIST,FLOW ADJUST,KICK-OUT,ZER O LEAK

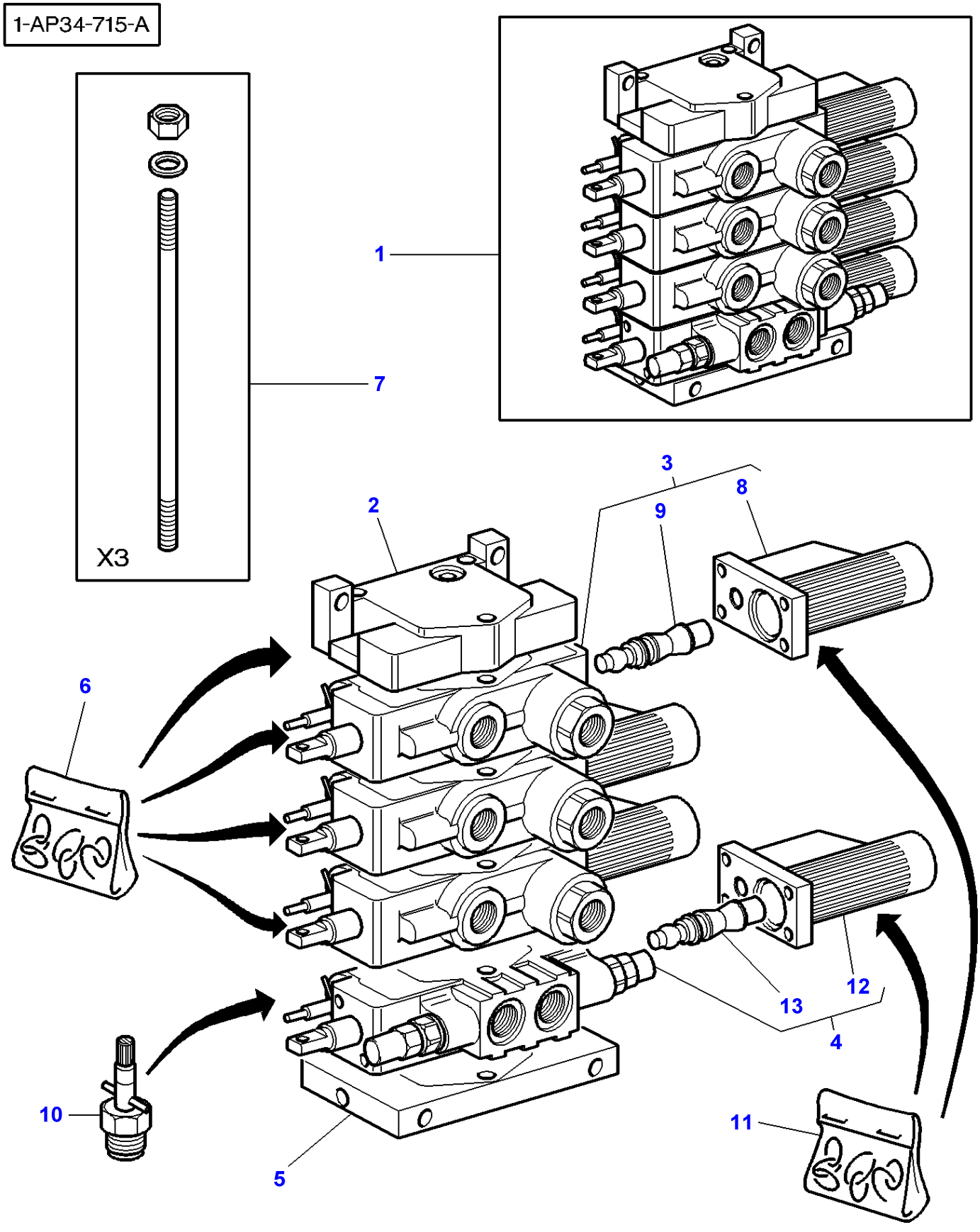
1-AP34-715-A
X3
1
7
2
3
8
9
6
10
5
4
12
13
11

| Item | Part Number | Qty | Description | Comments |
|---|---|---|---|---|
| 1 | 3716323M91 | 1 | Distributor | |
| 2 | 3716316M1 | 1 | Element | (1) |
| 3 | 3713928M3 | 3 | Distributor | [A] (1) |
| 4 | 3713927M3 | 1 | Distributor | [B] (1) |
| 5 | 3716314M1 | 1 | Element | (1) |
| 6 | 3902067M91 | 1 | Kit, Joint | (1) |
| 7 | 3716367M1 | 1 | Parts Pack | (1) |
| 8 | 3902797M91 | 1 | Protector | (3) |
| 9 | 3790773M11 | 1 | Kit, Service | (3) |
| 10 | 3790797M11 | 1 | Kit, Service | (1) |
| 11 | 3902066M91 | 1 | Kit, Joint | (1) |
| 12 | 3902797M91 | 3 | Protector | (4) |
| 13 | 3790773M11 | 1 | Kit, Service | (4) |

**FOOTNOTE [A]** 4 FLOATING POSITIONS DIST,FLOW ADJUST,KICK-OUT,ZER O LEAK
**FOOTNOTE [B]** 4 FLOAT POSIT DIST,FLOW ADJUST,KICK-OUT W 2 OVERP RES.VALVE AND RESUPPLYING FOR HYDRAULIC MOTOR

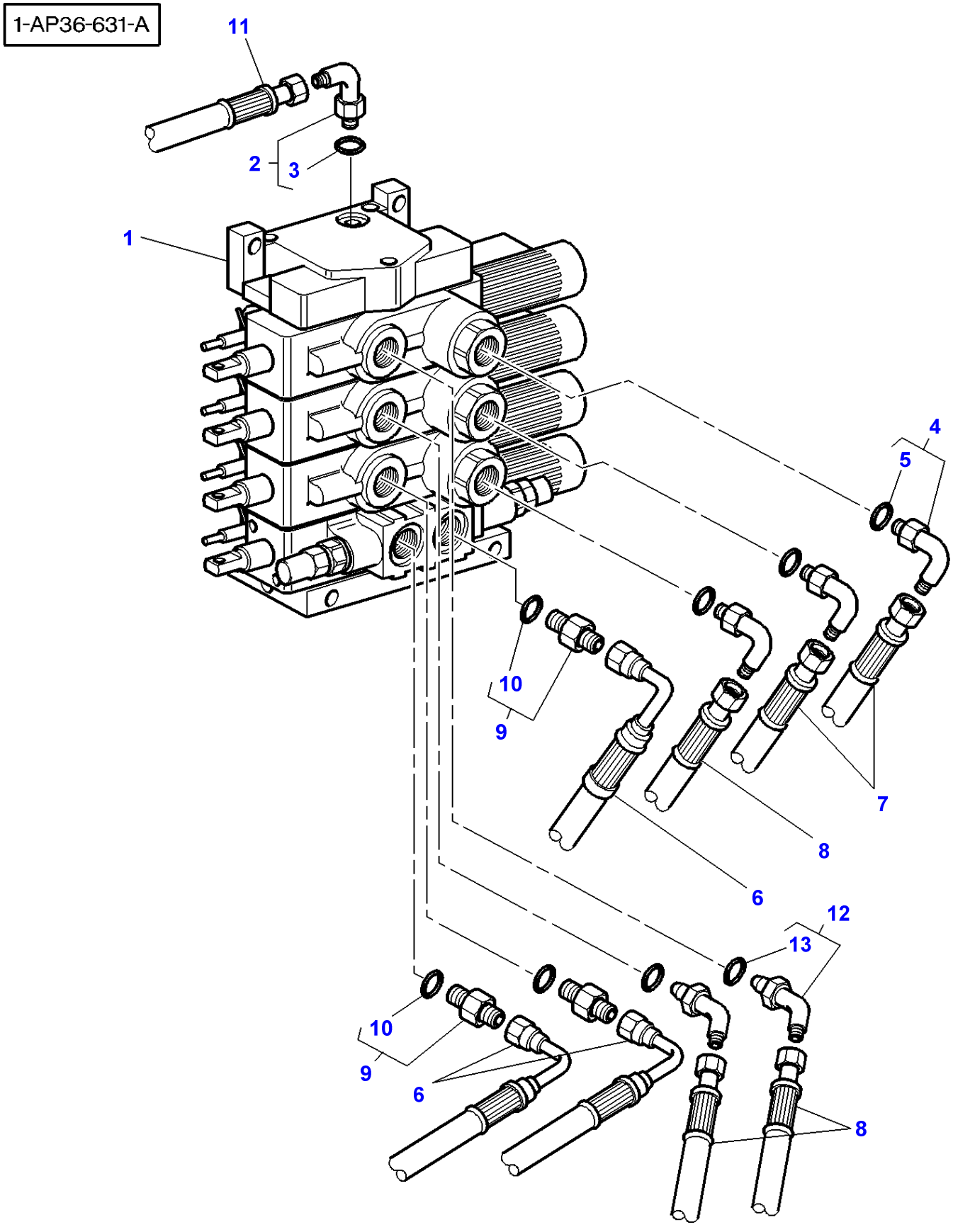
1-AP36-631-A
11
2
3
1
4
5
10
9
7
8
6
12
13
10
9
6
8

| Item | Part Number | Qty | Description | Comments |
|---|---|---|---|---|
| 1 | 3716323M91 | 1 | Distributor | |
| 2 | 357197X91 | 1 | Elbow | |
| 3 | **831452M1** | 1 | O Ring | (2) |
| 4 | 380031X91 | 3 | Union | 7/88-14 |
| 5 | 1882958M1 | 1 | O Ring | (4) |
| 6 | 3712540M1 | 3 | Hydr Hose | Length 650MM |
| 7 | 3714951M1 | 2 | Hydr Hose | Length 500MM |
| 8 | 3583591M1 | 3 | Hydr Hose | Length 690MM |
| 9 | 835013M91 | 3 | Union | |
| 10 | 1882958M1 | 1 | O Ring | (9) |
| 11 | 3716398M1 | 1 | Hydr Hose | [A] |
| | 3792042M1 | 1 | Hydr Hose | [B] Length 1400MM |
| 12 | 835010M91 | 2 | Elbow | |
| 13 | 1882958M1 | 1 | O Ring | (12) |

**FOOTNOTE [A]** WITH PUMP 45CC
**FOOTNOTE [B]** WITH PUMP 60CC

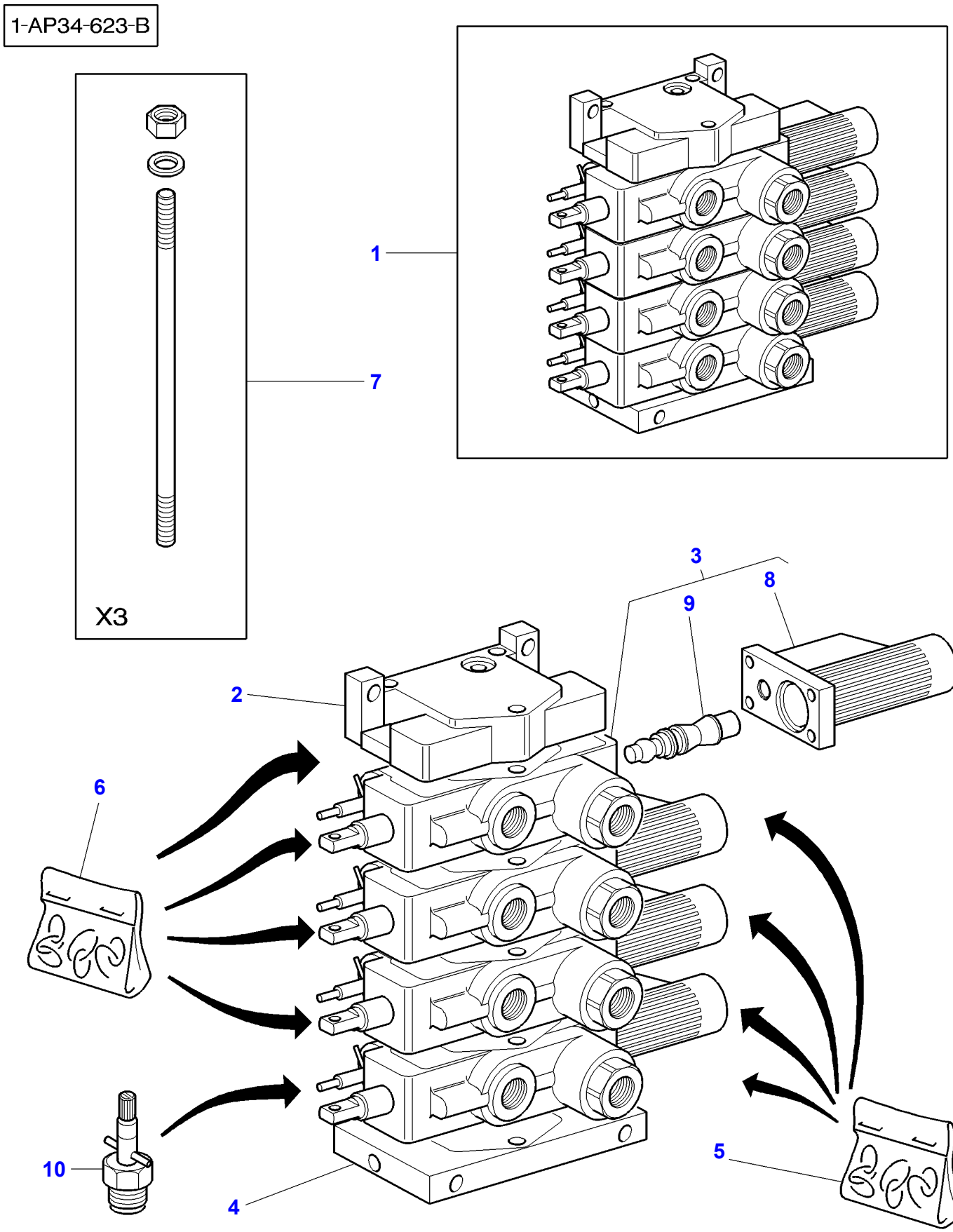
1-AP34-623-B
1
7
X3
3
8
9
2
6
10
4
5

| Item | Part Number | Qty | Description | Comments |
|---|---|---|---|---|
| 1 | 3716324M91 | 1 | Distributor | |
| 2 | 3716316M1 | 1 | Element | (1) |
| 3 | 3713928M3 | 4 | Distributor | [A] (1) |
| 4 | 3716314M1 | 1 | Element | (1) |
| 5 | 3902066M91 | 1 | Kit, Joint | (1) |
| 6 | 3902067M91 | 1 | Kit, Joint | (1) |
| 7 | 3716367M1 | 1 | Parts Pack | (1) |
| 8 | 3902797M91 | 1 | Protector | (3) |
| 9 | 3790773M11 | 1 | Kit, Service | (3) |
| 10 | 3790797M11 | 1 | Kit, Service | (3) |

**FOOTNOTE [A]** 4 FLOATING POSITIONS DIST,FLOW ADJUST,KICK-OUT,ZER O LEAK

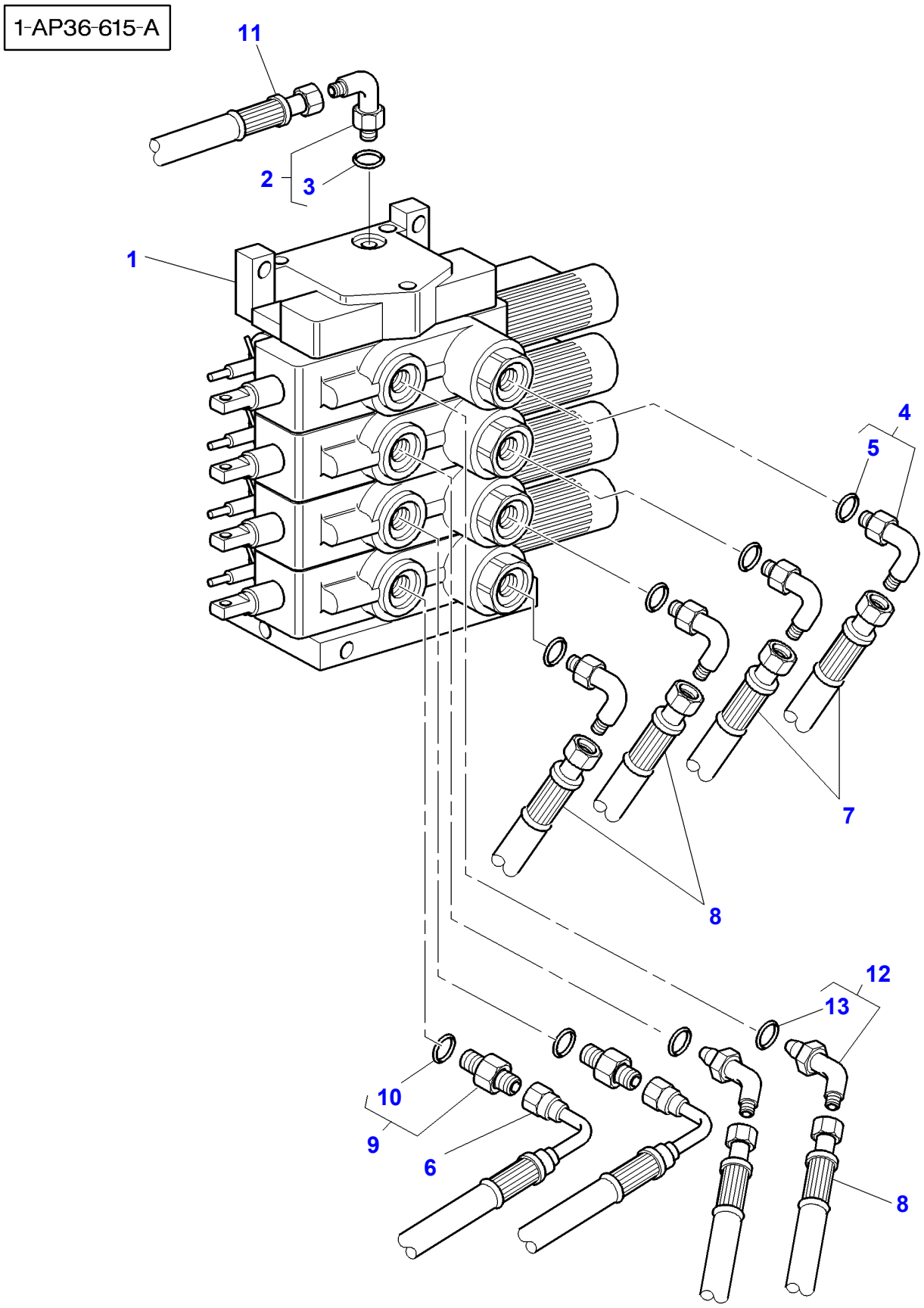
1-AP36-615-A
11
2
3
1
4
5
7
8
12
13
10
9
6
8

| Item | Part Number | Qty | Description | Comments |
|---|---|---|---|---|
| 1 | 3716324M91 | 1 | Distributor | |
| 2 | 357197X91 | 1 | Elbow | |
| 3 | **831452M1** | 1 | O Ring | (2) |
| 4 | 380031X91 | 4 | Union | 7/88-14 |
| 5 | 1882958M1 | 1 | O Ring | (4) |
| 6 | 3712540M1 | 2 | Hydr Hose | Length 650MM |
| 7 | 3714951M1 | 2 | Hydr Hose | Length 500MM |
| 8 | 3583591M1 | 4 | Hydr Hose | Length 690MM |
| 9 | 835013M91 | 2 | Union | |
| 10 | 1882958M1 | 1 | O Ring | (9) |
| 11 | 3716398M1 | 1 | Hydr Hose | [A] |
| | 3792042M1 | 1 | Hydr Hose | [B] Length 1400MM |
| 12 | 835010M91 | 2 | Elbow | |
| 13 | 1882958M1 | 1 | O Ring | (12) |

**FOOTNOTE [A]** WITH PUMP 45CC
**FOOTNOTE [B]** WITH PUMP 60CC

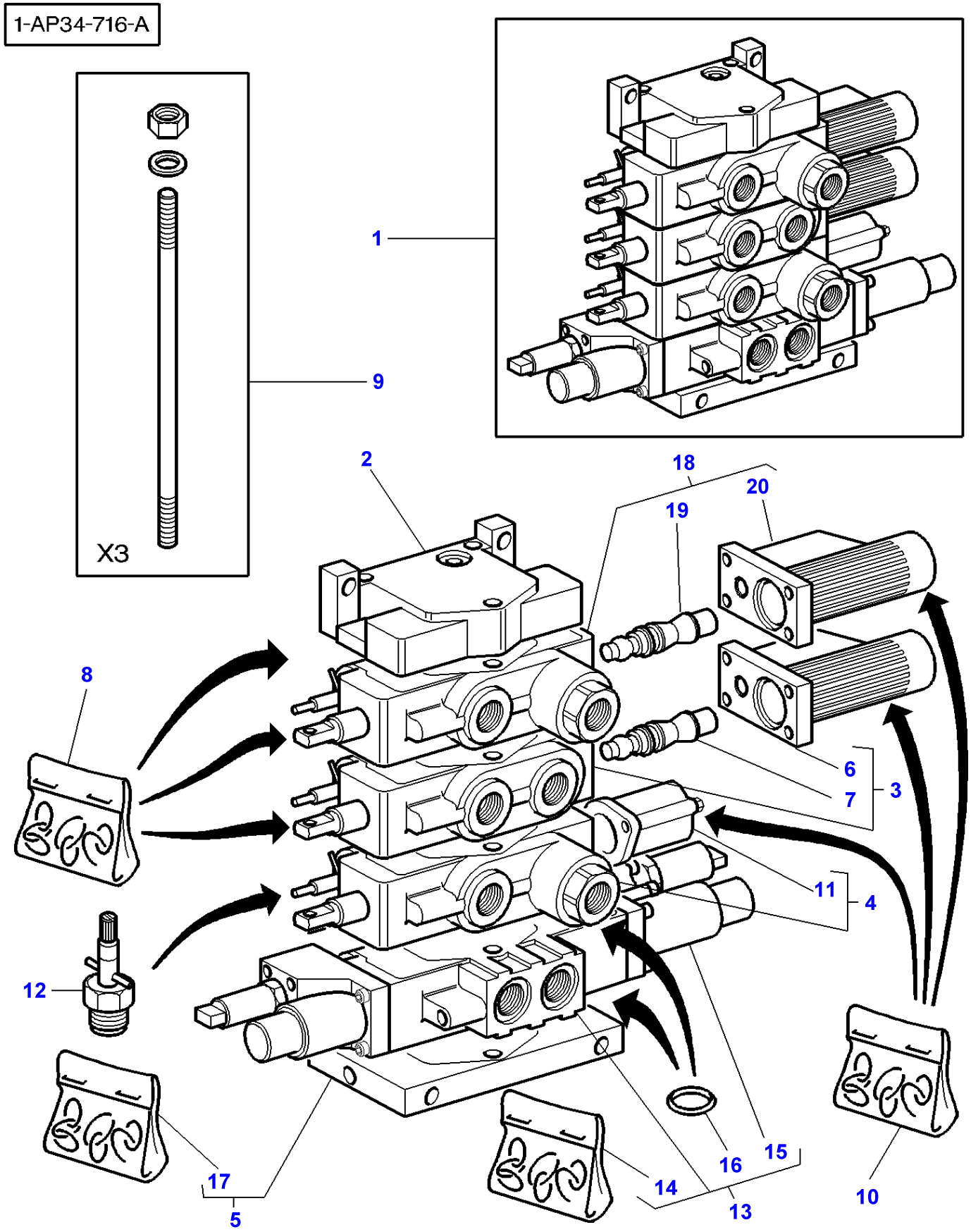
1-AP34-716-A
X3
1
9
2
18
20
19
8
6
7
3
11
4
12
17
5
14
16
15
13
10

| Item | Part Number | Qty | Description | Comments |
|---|---|---|---|---|
| 1 | 3716393M91 | 1 | Distributor | |
| 2 | 3716316M1 | 1 | Element | (1) |
| 3 | 3902062M92 | 1 | Distributor | [A] (1) |
| 4 | 3902063M91 | 1 | Distributor | [B] (1) |
| 5 | 3716315M1 | 1 | Element | (1) |
| 6 | 3902797M91 | 1 | Protector | (3) |
| 7 | 3790773M11 | 1 | Kit, Service | (3) |
| 8 | 3902067M91 | 1 | Kit, Joint | (1) |
| 9 | 3716367M1 | 1 | Parts Pack | (1) |
| 10 | 3902066M91 | 1 | Kit, Joint | (1) |
| 11 | 3902813M91 | 1 | Protector | (4) |
| 12 | 3790797M11 | 3 | Kit, Service | (1) |
| 13 | 3715122M1 | 1 | Pressure Valve | [C] (1) |
| 14 | 3902734M91 | 1 | Kit, Joint | (13) |
| 15 | 3900512M92 | 2 | Pressure Valve | (13) |
| 16 | 359288X1 | 4 | Seal | (13) |
| 17 | 3902733M91 | 1 | Kit, Joint | (5) |
| 18 | 3713928M3 | 1 | Distributor | [D] (1) |
| 19 | 3790773M11 | 1 | Kit, Service | (18) |
| 20 | 3902797M91 | 1 | Protector | (18) |

**FOOTNOTE [A]** DIST 4 FLOATING POSITIONS ,FLOW ADJUST,KICK-OUT,W/ O, ZERO LEAK
**FOOTNOTE [B]** DIST 3 FLOATING POSITIONS,RETURN BY SPRING,FLOW AD JUST,ZERO LEAK
**FOOTNOTE [C]** DIST 3 FLOATING POSITIONS,AUTOMATIC KICK-OUT(BY SP RING),FLOW ADJUST,ELECTRIC CONTROL
**FOOTNOTE [D]** 4 FLOATING POSITIONS DIST,FLOW ADJUST,KICK-OUT,ZER O LEAK

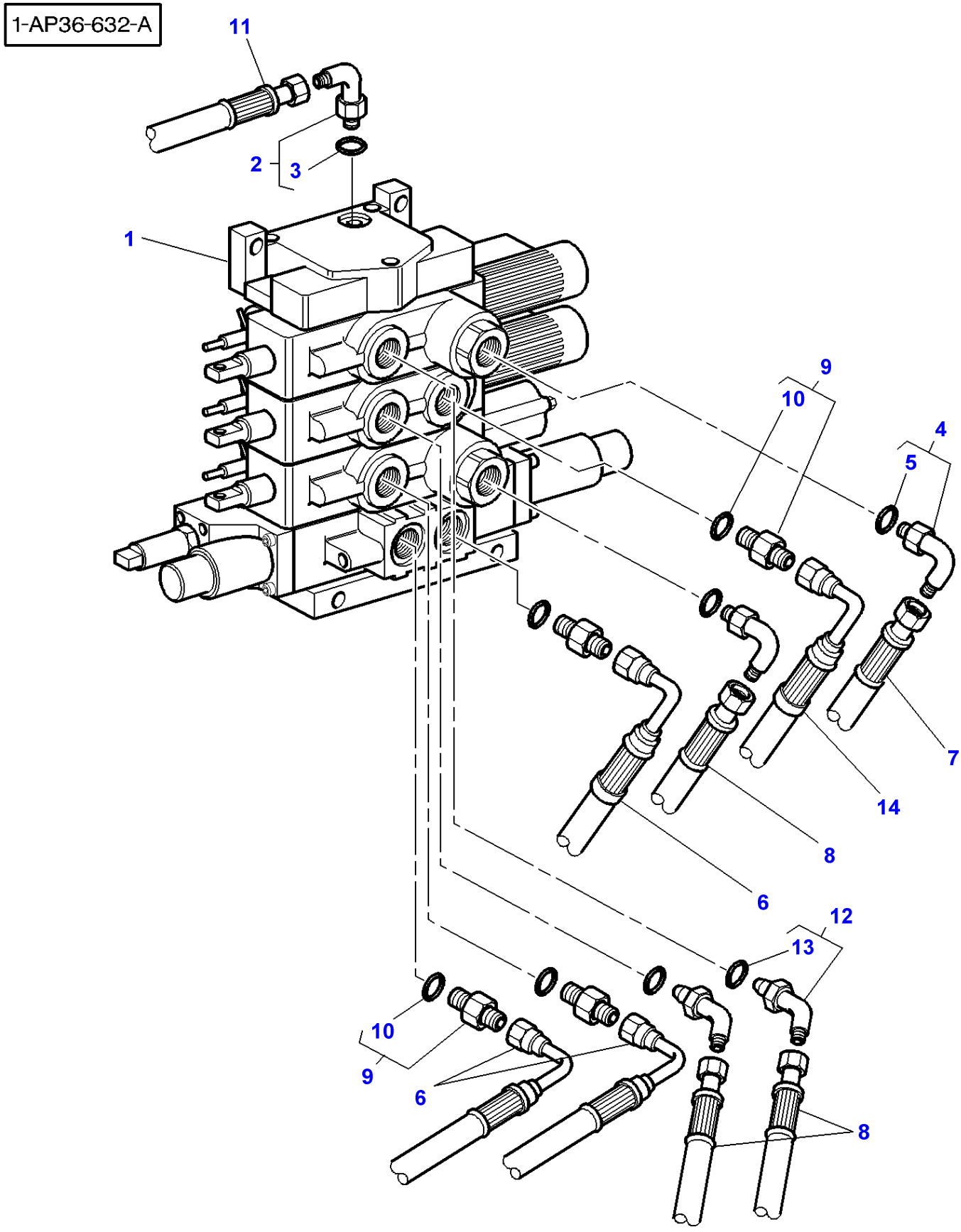
1-AP36-632-A
11
2
3
1
9
10
4
5
7
14
8
6
12
13
10
9
6
8

| Item | Part Number | Qty | Description | Comments |
|---|---|---|---|---|
| 1 | 3716393M91 | 1 | Distributor | |
| 2 | 357197X91 | 1 | Elbow | |
| 3 | **831452M1** | 1 | O Ring | (2) |
| 4 | 380031X91 | 2 | Union | 7/88-14 |
| 5 | 1882958M1 | 1 | O Ring | (4) |
| 6 | 3712540M1 | 3 | Hydr Hose | Length 650MM |
| 7 | 3714951M1 | 1 | Hydr Hose | Length 500MM |
| 8 | 3583591M1 | 3 | Hydr Hose | Length 690MM |
| 9 | 835013M91 | 4 | Union | |
| 10 | 1882958M1 | 1 | O Ring | (9) |
| 11 | 3716398M1 | 1 | Hydr Hose | [A] |
| | 3792042M1 | 1 | Hydr Hose | [B] Length 1400MM |
| 12 | 835010M91 | 2 | Elbow | |
| 13 | 1882958M1 | 1 | O Ring | (12) |
| 14 | 3714955M1 | 1 | Hydr Hose | Length 500MM |

**FOOTNOTE [A]** WITH PUMP 45CC
**FOOTNOTE [B]** WITH PUMP 60CC

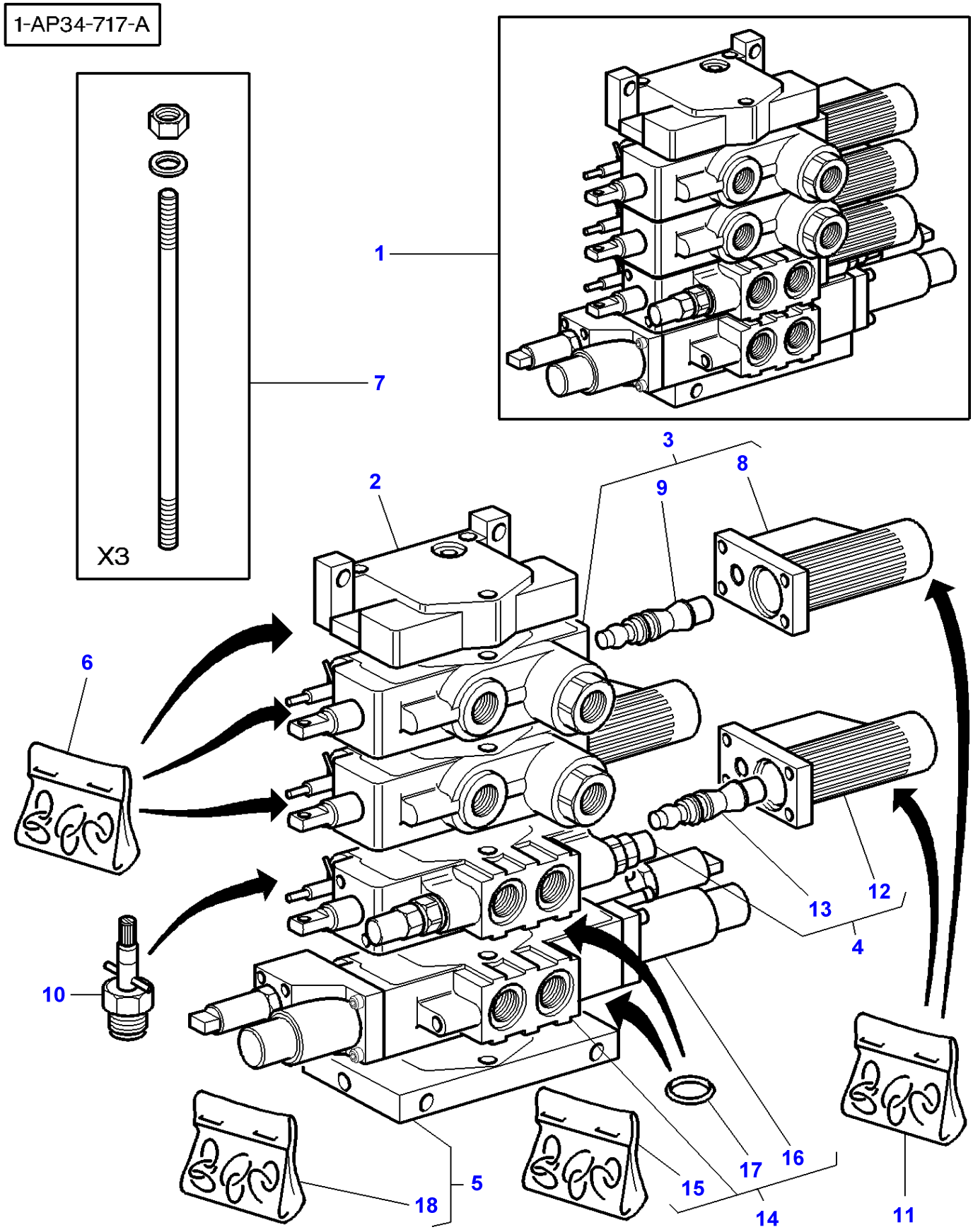
1-AP34-717-A
X3
1
7
2
3
8
9
6
10
4
12
13
5
18
15
16
17
14
11

| Item | Part Number | Qty | Description | Comments |
|---|---|---|---|---|
| 1 | 3716394M91 | 1 | Distributor | |
| 2 | 3716316M1 | 1 | Element | (1) |
| 3 | 3713928M3 | 2 | Distributor | [A] (1) |
| 4 | 3713927M3 | 1 | Distributor | [B] (1) |
| 5 | 3716315M1 | 1 | Element | (1) |
| 6 | 3902067M91 | 1 | Kit, Joint | (1) |
| 7 | 3716367M1 | 1 | Parts Pack | (1) |
| 8 | 3902797M91 | 1 | Protector | (3) |
| 9 | 3790773M11 | 1 | Kit, Service | (3) |
| 10 | 3790797M11 | 2 | Kit, Service | (1) |
| 11 | 3902066M91 | 1 | Kit, Joint | (1) |
| 12 | 3902797M91 | 1 | Protector | (4) |
| 13 | 3790773M11 | 1 | Kit, Service | (4) |
| 14 | 3715122M1 | 1 | Pressure Valve | [C] (1) |
| 15 | 3902734M91 | 1 | Kit, Joint | (14) |
| 16 | 3900512M92 | 2 | Pressure Valve | (14) |
| 17 | 359288X1 | 4 | Seal | (14) |
| 18 | 3902733M91 | 1 | Kit, Joint | (5) |

**FOOTNOTE [A]** 4 FLOATING POSITIONS DIST,FLOW ADJUST,KICK-OUT,ZER O LEAK
**FOOTNOTE [B]** 4 FLOAT POSIT DIST,FLOW ADJUST,KICK-OUT W 2 OVERP RES.VALVE AND RESUPPLYING FOR HYDRAULIC MOTOR
**FOOTNOTE [C]** DIST 3 FLOATING POSITIONS,AUTOMATIC KICK-OUT(BY SP RING),FLOW ADJUST,ELECTRIC CONTROL

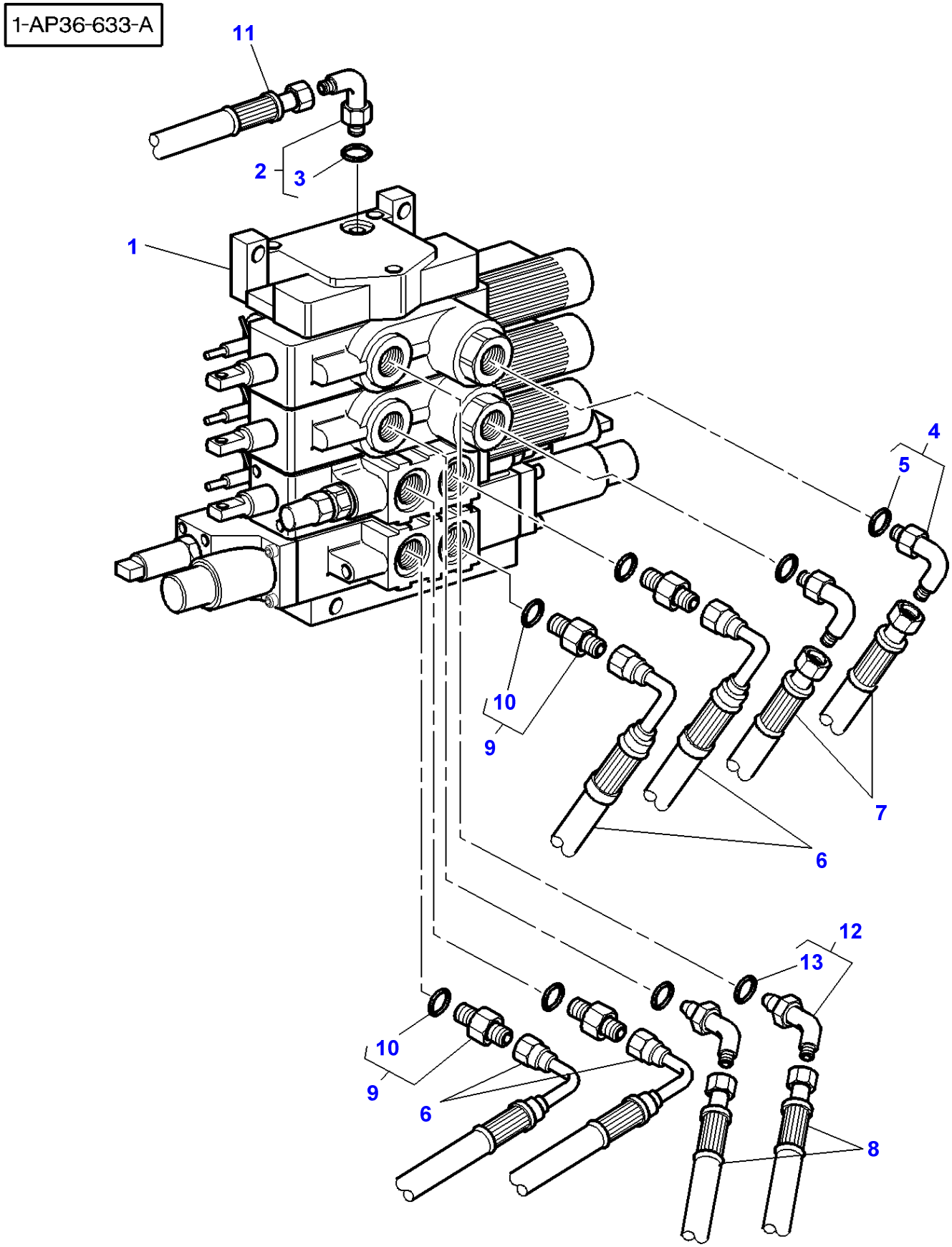
1-AP36-633-A
11
2
3
1
4
5
10
9
7
6
12
13
10
9
6
8

| Item | Part Number | Qty | Description | Comments |
|---|---|---|---|---|
| 1 | 3716394M91 | 1 | Distributor | |
| 2 | 357197X91 | 1 | Elbow | |
| 3 | **831452M1** | 1 | O Ring | (2) |
| 4 | 380031X91 | 2 | Union | 7/88-14 |
| 5 | 1882958M1 | 1 | O Ring | (4) |
| 6 | 3712540M1 | 4 | Hydr Hose | Length 650MM |
| 7 | 3714951M1 | 2 | Hydr Hose | Length 500MM |
| 8 | 3583591M1 | 2 | Hydr Hose | Length 690MM |
| 9 | 835013M91 | 4 | Union | |
| 10 | 1882958M1 | 1 | O Ring | (9) |
| 11 | 3716398M1 | 1 | Hydr Hose | [A] |
| | 3792042M1 | 1 | Hydr Hose | [B] Length 1400MM |
| 12 | 835010M91 | 2 | Elbow | |
| 13 | 1882958M1 | 1 | O Ring | (12) |

**FOOTNOTE [A]** WITH PUMP 45CC
**FOOTNOTE [B]** WITH PUMP 60CC

1-AP35-614-B

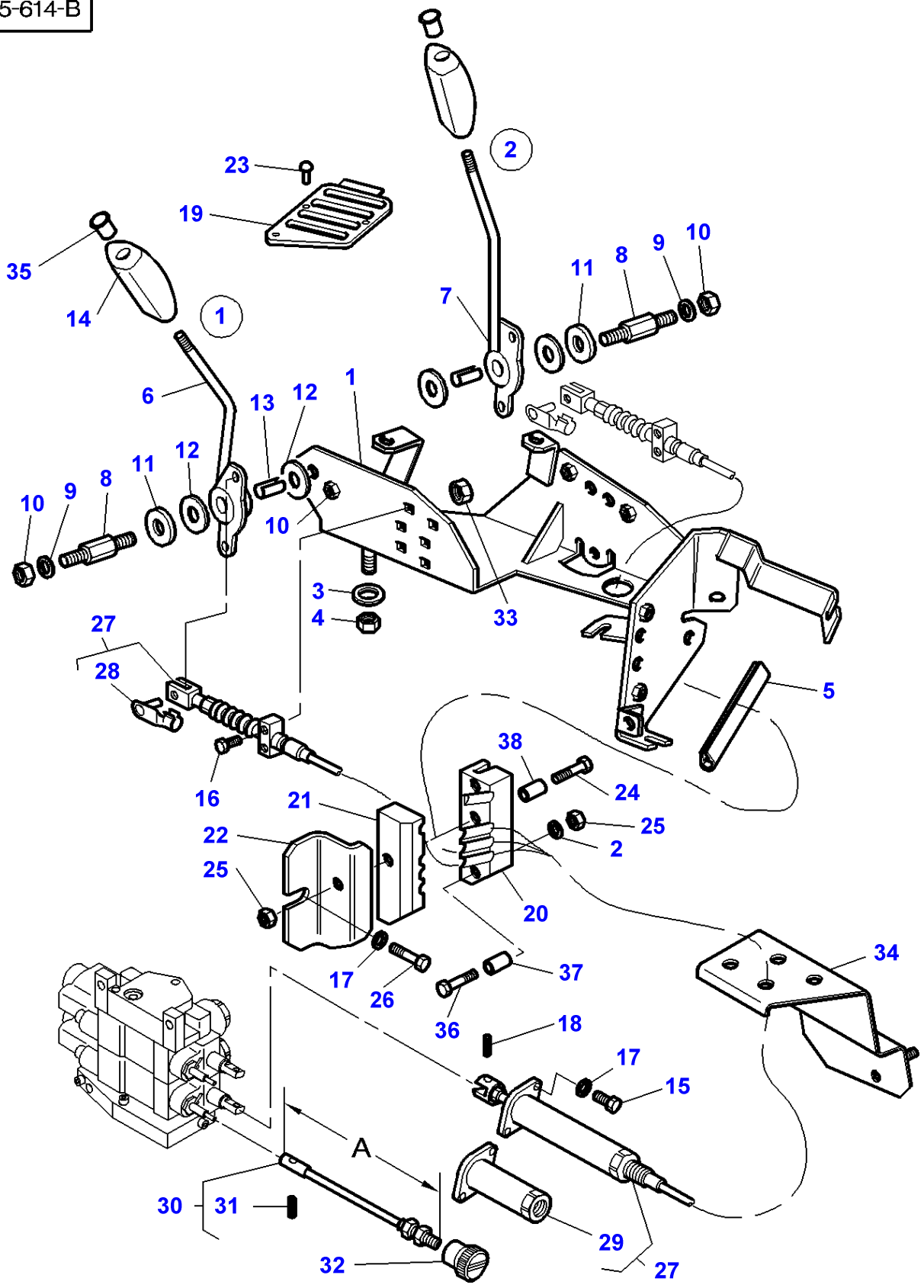
1
2
3
4
5
6
7
8
9
10
11
12
13
14
16
17
18
19
20
21
22
23
24
25
26
27
28
29
30
31
32
33
34
35
36
37
38
A

| Item | Part Number | Qty | Description | Comments |
|---|---|---|---|---|
| 1 | 3778480M91 | 1 | Support | |
| 2 | 390971X1 | 2 | Washer | |
| 3 | 385361X1 | 4 | Washer | |
| 4 | 1441461X1 | 4 | Locknut | M8 |
| 5 | 3052562M1 | 1 | Gasket | |
| 6 | 3778481M2 | 1 | Lever | |
| 7 | 3778482M2 | 1 | Lever | |
| 8 | 3712956M3 | 2 | Clevis Pin | |
| 9 | 390972X1 | 4 | Washer Metric | |
| 10 | 1441461X1 | 4 | Locknut | M8 |
| 11 | 3387447M1 | 2 | Washer | |
| 12 | 3386514M1 | 4 | Friction Disc | |
| 13 | 3713905M1 | 2 | Bearing | |
| 14 | 3715495M1 | 2 | Handle | |
| 15 | 357831X1 | 4 | Screw | 1/4"-20X16 |
| 16 | 3009332X1 | 4 | Screw | M6X30 |
| 17 | 390971X1 | 5 | Washer | |
| 18 | 3714223M1 | 2 | Clevis Pin | |
| 19 | 3778486M1 | 1 | Grille | |
| 20 | 3712979M2 | 1 | Bridle | |
| 21 | 3712980M2 | 1 | Bridle | |
| 22 | 3712981M2 | 1 | Angle | |
| 23 | 3010506X1 | 7 | Screw | M5X16 |
| 24 | 339096X1 | 2 | Bolt Metric | M6X35 |
| 25 | 339030X1 | 3 | Nut Metric | |
| 26 | 339560X1 | 1 | Hex. Sock. Screw | M6X16 |
| 27 | 3778566M2 | 2 | Hydraulic Cable | Length 1310MM |
| 28 | 3600190M1 | 1 | Clevis Pin | (27)<br>Length 28MM |
| 29 | 3902200M91 | 1 | Parts Pack | (27) |
| 30 | 3778560M2 | 2 | Cable | Length A=563MM |
| 31 | 3010003X1 | 1 | Screw | (30) |
| 32 | 3715367M1 | 1 | Button | [B] |
| | 3715365M1 | 1 | Button | [C] |
| 33 | 1441500X1 | 4 | Locknut | M6 |
| 34 | 3779479M1 | 1 | Support | |
| 35 | 3715496M1 | 1 | Muff | [B] |
| | 3715497M1 | 1 | Muff | [C] |
| 36 | 1440922X1 | 1 | Bolt | M6X60 |
| 37 | 3714645M1 | 2 | Spacer | Diameter 8X26,5 |
| 38 | 3714646M1 | 1 | Spacer | Diameter 8X50 |

**FOOTNOTE [B]** BLACK
**FOOTNOTE [C]** RED

1-AP35-615-A

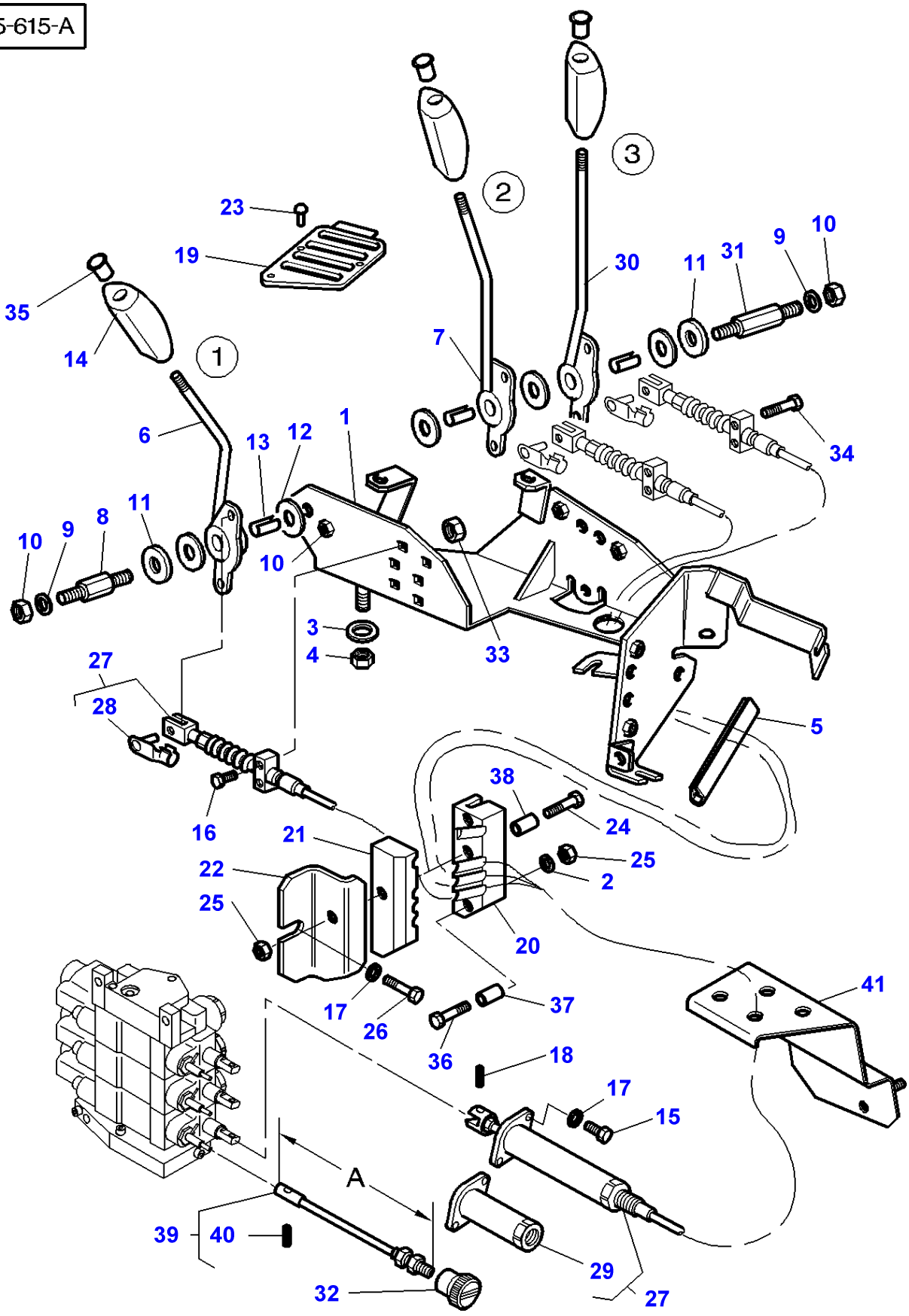
1
2
3
A
1
2
3
4
5
6
7
8
9
10
11
12
13
14
15
16
17
18
19
20
21
22
23
24
25
26
27
28
29
30
31
32
33
34
35
36
37
38
39
40
41

| Item | Part Number | Qty | Description | Comments |
|---|---|---|---|---|
| 1 | 3778480M91 | 1 | Support | |
| 2 | 390971X1 | 2 | Washer | |
| 3 | 385361X1 | 4 | Washer | |
| 4 | 1441461X1 | 4 | Locknut | M8 |
| 5 | 3052562M1 | 1 | Gasket | |
| 6 | 3778481M2 | 1 | Lever | |
| 7 | 3778482M2 | 1 | Lever | |
| 8 | 3712956M3 | 1 | Clevis Pin | |
| 9 | 390972X1 | 4 | Washer Metric | |
| 10 | 1441461X1 | 4 | Locknut | M8 |
| 11 | 3387447M1 | 2 | Washer | |
| 12 | 3386514M1 | 5 | Friction Disc | |
| 13 | 3713905M1 | 3 | Bearing | |
| 14 | 3715495M1 | 3 | Handle | |
| 15 | 357831X1 | 6 | Screw | 1/4"-20X16 |
| 16 | 3009332X1 | 2 | Screw | M6X30 |
| 17 | 390971X1 | 7 | Washer | |
| 18 | 3714223M1 | 3 | Clevis Pin | |
| 19 | 3778487M1 | 1 | Grille | |
| 20 | 3712979M2 | 1 | Bridle | |
| 21 | 3712980M2 | 1 | Bridle | |
| 22 | 3712981M2 | 1 | Angle | |
| 23 | 3010506X1 | 7 | Screw | M5X16 |
| 24 | 339096X1 | 2 | Bolt Metric | M6X35 |
| 25 | 339030X1 | 3 | Nut Metric | |
| 26 | 339560X1 | 1 | Hex. Sock. Screw | M6X16 |
| 27 | 3778566M2 | 3 | Hydraulic Cable | Length 1310MM |
| 28 | 3600190M1 | 1 | Clevis Pin | (27)<br>Length 28MM |
| 29 | 3902200M91 | 1 | Parts Pack | (27) |
| 30 | 3778483M2 | 1 | Lever | |
| 31 | 3712279M3 | 1 | Clevis Pin | Length 78MM |
| 32 | 3715367M1 | 1 | Button | [B] |
| | 3715365M1 | 1 | Button | [C] |
| | 3715364M1 | 1 | Button | [D] |
| 33 | 1441500X1 | 4 | Locknut | M6 |
| 34 | 3009336X1 | 2 | Screw | M6X55 |
| 35 | 3715496M1 | 1 | Muff | [B] |
| | 3715497M1 | 1 | Muff | [C] |
| | 3715498M1 | 1 | Muff | [D] |
| 36 | 1440922X1 | 1 | Bolt | M6X60 |
| 37 | 3714645M1 | 2 | Spacer | Diameter 8X26,5 |
| 38 | 3714646M1 | 1 | Spacer | Diameter 8X50 |
| 39 | 3778560M2 | 1 | Cable | Length A=563MM |
| | 3779469M1 | 2 | Cable | Length A=593MM |
| 40 | 3010003X1 | 1 | Screw | (39) |
| 41 | 3779479M1 | 1 | Support | |

**FOOTNOTE [B]** BLACK
**FOOTNOTE [C]** RED
**FOOTNOTE [D]** GREEN

1-AP35-616-A

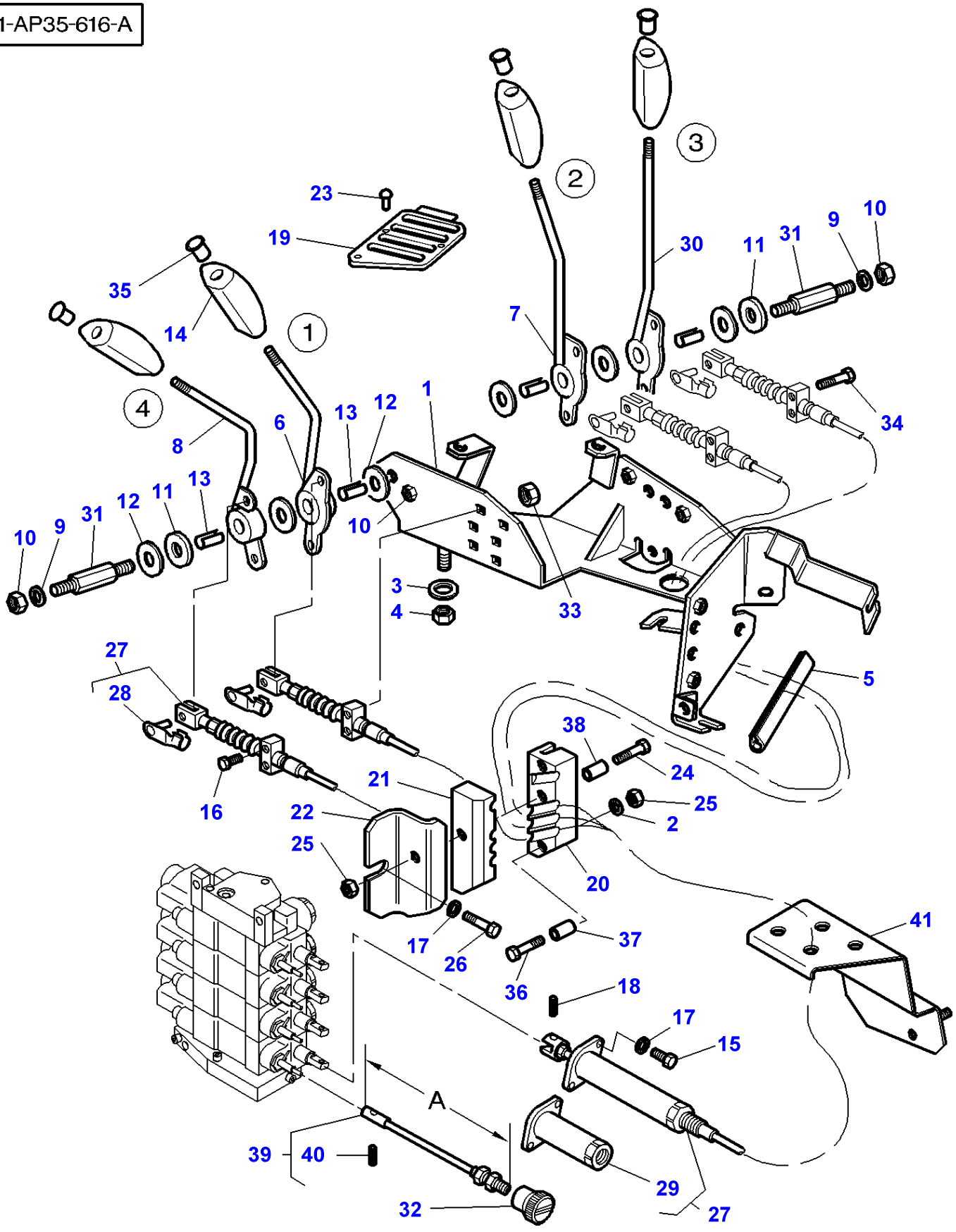
1
2
3
4
A
1
2
3
4
5
6
7
8
9
10
11
12
13
14
16
17
18
19
20
21
22
23
24
25
26
27
28
29
30
31
32
33
34
35
36
37
38
39
40
41

| Item | Part Number | Qty | Description | Comments |
|---|---|---|---|---|
| 1 | 3778480M91 | 1 | Support | |
| 2 | 390971X1 | 2 | Washer | |
| 3 | 385361X1 | 4 | Washer | |
| 4 | 1441461X1 | 4 | Locknut | M8 |
| 5 | 3580695M1 | 1 | Gasket | |
| 6 | 3778481M2 | 1 | Lever | |
| 7 | 3778482M2 | 1 | Lever | |
| 8 | 3778484M3 | 1 | Lever | |
| 9 | 390972X1 | 4 | Washer Metric | |
| 10 | 1441461X1 | 4 | Locknut | M8 |
| 11 | 3387447M1 | 2 | Washer | |
| 12 | 3386514M1 | 6 | Friction Disc | |
| 13 | 3713905M1 | 4 | Bearing | |
| 14 | 3715495M1 | 4 | Handle | |
| 15 | 357831X1 | 8 | Screw | 1/4"-20X16 |
| 16 | 3009336X1 | 2 | Screw | M6X55 |
| 17 | 390971X1 | 9 | Washer | |
| 18 | 3714223M1 | 3 | Clevis Pin | |
| 19 | 3778488M1 | 1 | Grille | |
| 20 | 3712979M2 | 1 | Bridle | |
| 21 | 3712980M2 | 1 | Bridle | |
| 22 | 3712981M2 | 1 | Angle | |
| 23 | 3010506X1 | 7 | Screw | M5X16 |
| 24 | 339096X1 | 2 | Bolt Metric | M6X35 |
| 25 | 339030X1 | 3 | Nut Metric | |
| 26 | 339560X1 | 1 | Hex. Sock. Screw | M6X16 |
| 27 | 3778566M2 | 4 | Hydraulic Cable | Length 1310MM |
| 28 | 3600190M1 | 1 | Clevis Pin | (27)<br>Length 28MM |
| 29 | 3902200M91 | 1 | Parts Pack | (27) |
| 30 | 3778483M2 | 1 | Lever | |
| 31 | 3712279M3 | 2 | Clevis Pin | Length 78MM |
| 32 | 3715366M1 | 1 | Button | [A] |
| | 3715367M1 | 1 | Button | [B] |
| | 3715365M1 | 1 | Button | [C] |
| | 3715364M1 | 1 | Button | [D] |
| 33 | 1441500X1 | 4 | Locknut | M6 |
| 34 | 3009336X1 | 2 | Screw | M6X55 |
| 35 | 3715496M1 | 1 | Muff | [B] |
| | 3715497M1 | 1 | Muff | [C] |
| | 3715498M1 | 1 | Muff | [D] |
| | 3715499M1 | 1 | Muff | [A] |
| 36 | 1440922X1 | 1 | Bolt | M6X60 |
| 37 | 3714645M1 | 2 | Spacer | Diameter 8X26,5 |
| 38 | 3714646M1 | 1 | Spacer | Diameter 8X50 |
| 39 | 3778560M2 | 2 | Cable | Length A=563MM |
| | 3779469M1 | 2 | Cable | Length A=593MM |
| 40 | 3010003X1 | 1 | Screw | (39) |
| 41 | 3780804M1 | 1 | Support | |

**FOOTNOTE [A]** YELLOW
**FOOTNOTE [B]** BLACK
**FOOTNOTE [C]** RED
**FOOTNOTE [D]** GREEN

| Page Title | Page Number |
|---|---|
| Instrument Panel And Instruments | 080-0005 |
| Electric Equipment & Instrument Panel | 080-0010 |
| Engine Harness | 080-0015 |
| INSTRUMENT PANEL HARNESS - Way Lights Fitted On The Cab Roof | 080-0020 |
| INSTRUMENT PANEL HARNESS | 080-0025 |
| Tractor Cab - Electrical Wiring - With Electronic Lift | 080-0030 |
| HARNESS CONSOLE | 080-0035 |
| FULL POWERSHIFT CONTROL HARNESS - ARMREST | 080-0040 |
| ROOF HARNESS | 080-0045 |
| LIGHTING HARNESS - ROOF | 080-0050 |
| Tractor Cab - Lighting Equipment - Spanish Excepted | 080-0055 |
| Tractor Cab - Lighting Equipment - For Spanish | 080-0060 |

1-AC15-606-A

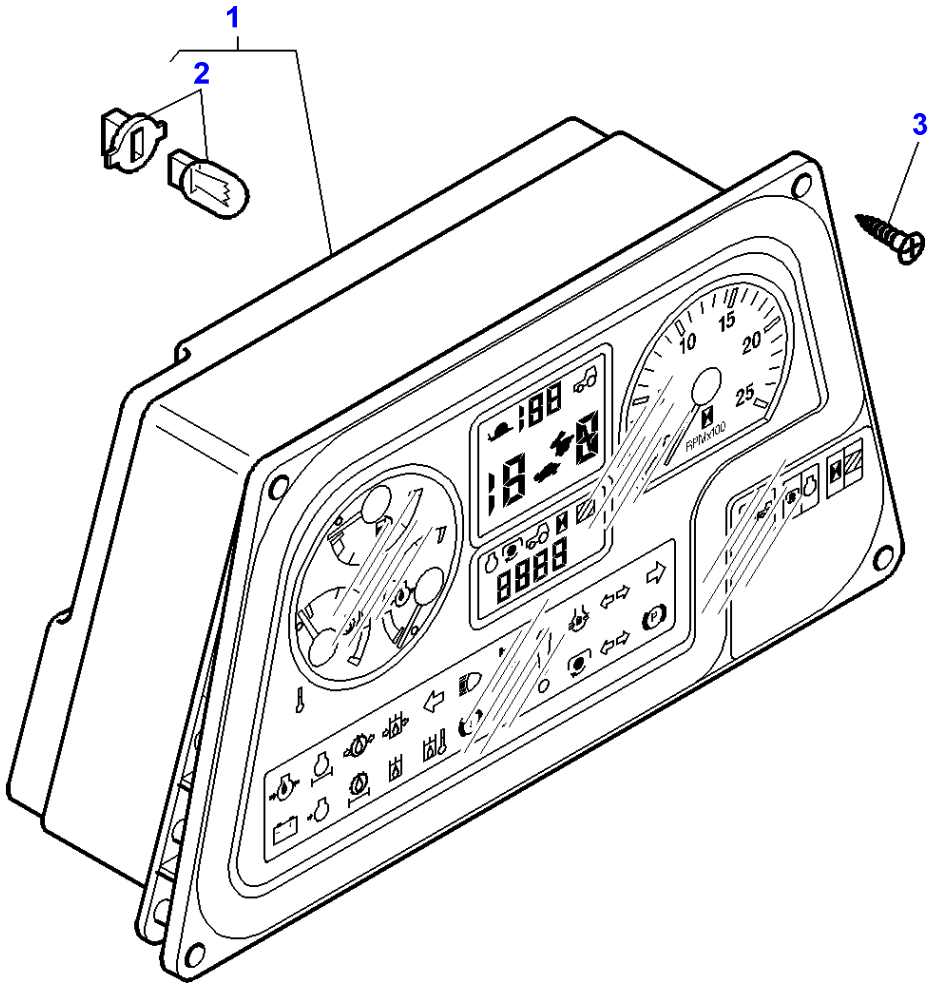

| Item | Part Number | Qty | Description | Comments |
|---|---|---|---|---|
| 1 | 3777609M96 | 1 | Instrument Panel | |
| 2 | **72505208** | 26 | Bulb | (1) |
| 3 | 3010791X1 | 4 | Screw | M4x20 |

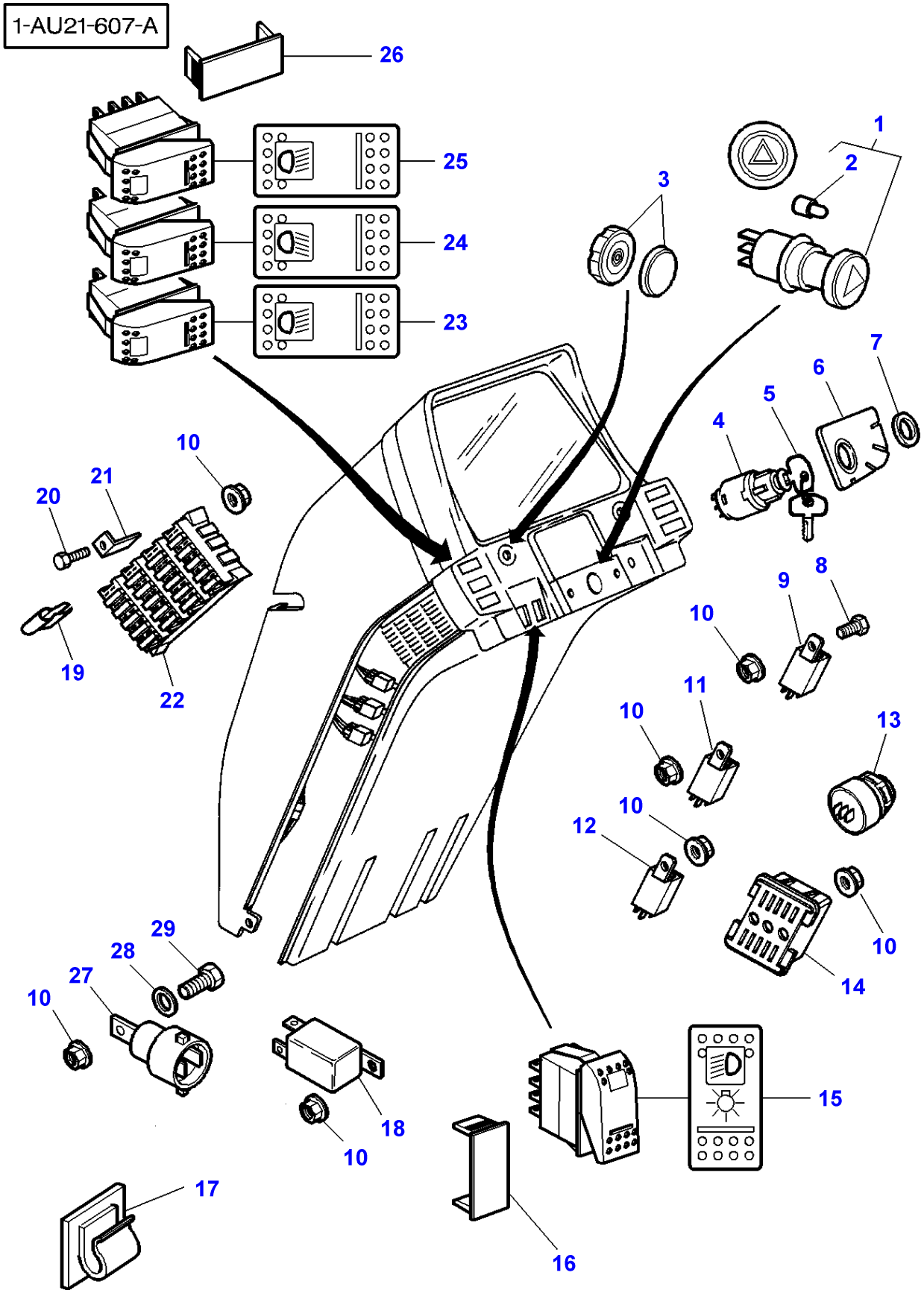
1-AU21-607-A
26
25
24
23
3
1
2
7
6
5
4
10
21
20
19
22
9
8
10
11
10
13
10
12
10
14
29
28
27
10
18
10
17
16
15

| Item | Part Number | Qty | Description | Comments |
|---|---|---|---|---|
| 1 | **3370427M91** | 1 | Switch | |
| 2 | **3405185M1** | 1 | Bulb 12v 1.2w | (1) |
| 3 | 2191950K91 | 1 | Button | |
| 4 | 1874535M3 | 1 | Switch, Ignition | |
| 5 | **3813361M1** | 1 | Ignition Key | |
| 6 | 3583937M2 | 1 | Decal | |
| 7 | 1694534M1 | 1 | Nut | |
| 8 | 339560X1 | 1 | Hex. Sock. Screw | M6X16 |
| 9 | 3617865M1 | 1 | Blinker Unit | |
| 10 | 3010477X1 | X | Nut Metric | |
| 11 | **3387326M2** | 1 | Relay | 12V-50A |
| 12 | **3615652M1** | 1 | Relay | |
| 13 | 3777567M1 | 1 | Buzzer | |
| 14 | 3713103M1 | 1 | Connector | |
| 15 | **3713142M2** | 1 | Switch,Indirect | |
| 16 | 3713151M1 | 1 | Tap | |
| 17 | 3582094M1 | 2 | Tie | |
| 18 | 3713403M1 | 1 | Relay | |
| 19 | 3389401M1 | 1 | Fastener | |
| 20 | 339160X1 | 4 | Screw | M5X10 |
| 21 | 3782186M1 | 4 | Support | |
| 22 | | 1 | Fuse Box | See Page - Reference Number 080-0020/1 |
| | | 1 | Fuse Box | See Page - Reference Number 080-0025/1 |
| 23 | 3715188M1 | 1 | Switch,Indirect | [C] |
| 24 | 3715189M1 | 1 | Switch,Indirect | [D] |
| 25 | 3715188M1 | 1 | Switch,Indirect | [A] |
| 26 | 3713151M1 | 1 | Tap | [B] |
| 27 | **3779879M1** | 1 | Relay | 12V-50A |
| 28 | 390469X1 | 1 | Washer Metric | |
| 29 | 390990X1 | 1 | Screw Metric | M5X12 |

**FOOTNOTE [A]** WITH FRONT WORKING LIGHTS EXTENSION
**FOOTNOTE [B]** WITHOUT WORKLIGHT
**FOOTNOTE [C]** FRONT
**FOOTNOTE [D]** REAR

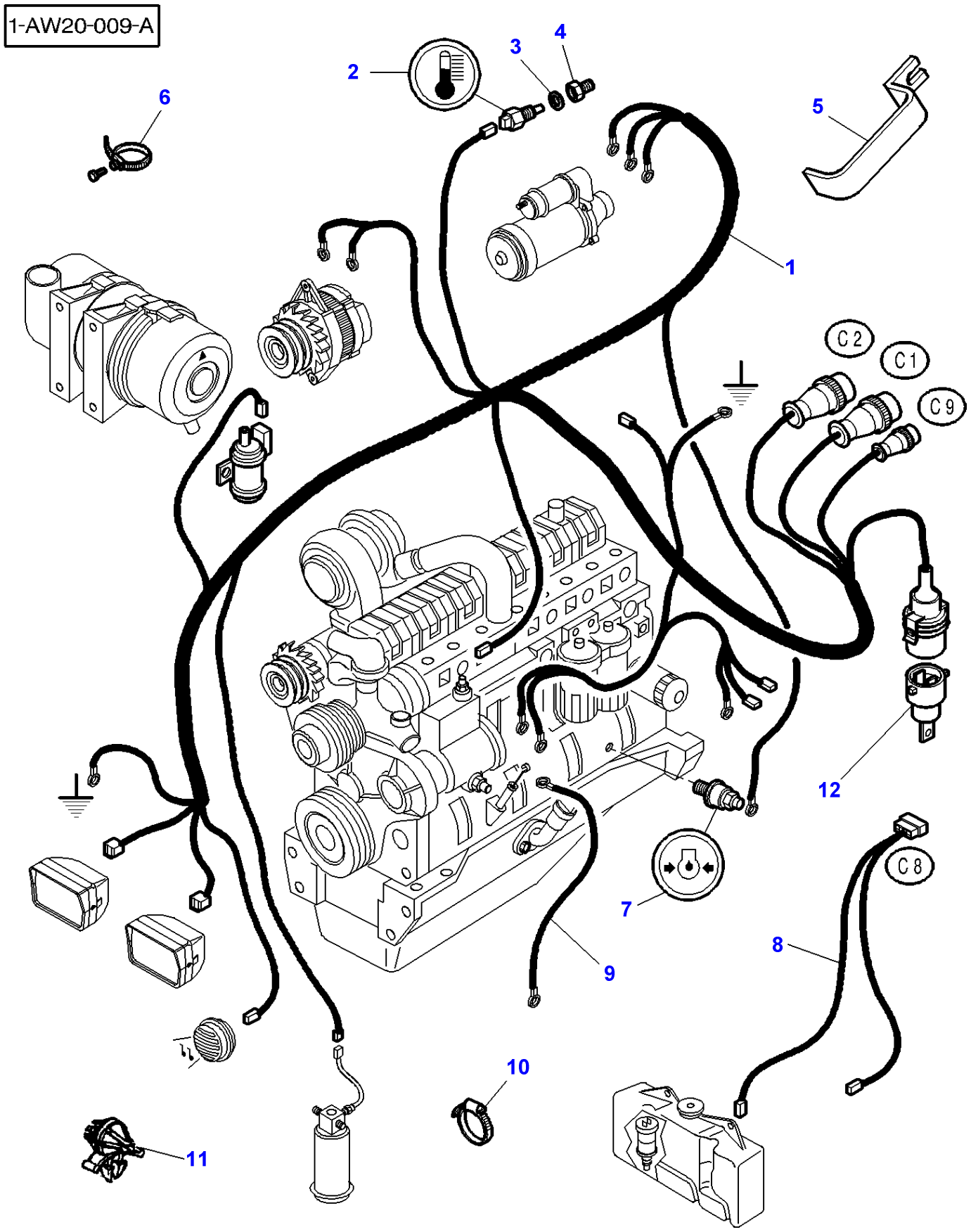
1-AW20-009-A
1
2
3
4
5
6
7
8
9
10
11
12
C1
C2
C8
C9

| Item | Part Number | Qty | Description | Comments |
|---|---|---|---|---|
| 1 | 3780412M1 | 1 | Harness | |
| | 3780413M1 | 1 | Harness | For Sweden |
| 2 | **5015257M1** | 1 | Sender | |
| 3 | 339526X1 | 1 | Seal | |
| 4 | 3778202M1 | 1 | Union | |
| 5 | 3715996M1 | 1 | Bridle | |
| 6 | 3771975M1 | 2 | Clamp | |
| 7 | **72512518** | 1 | Sender | |
| 8 | 3713812M1 | 1 | Harness | |
| 9 | 3712175M1 | 1 | Wire | |
| 10 | 3619622M1 | X | Cable Tie | |
| 11 | 3615984M1 | 1 | Fastener | |
| 12 | **3779879M1** | 1 | Relay | 12V-50A |

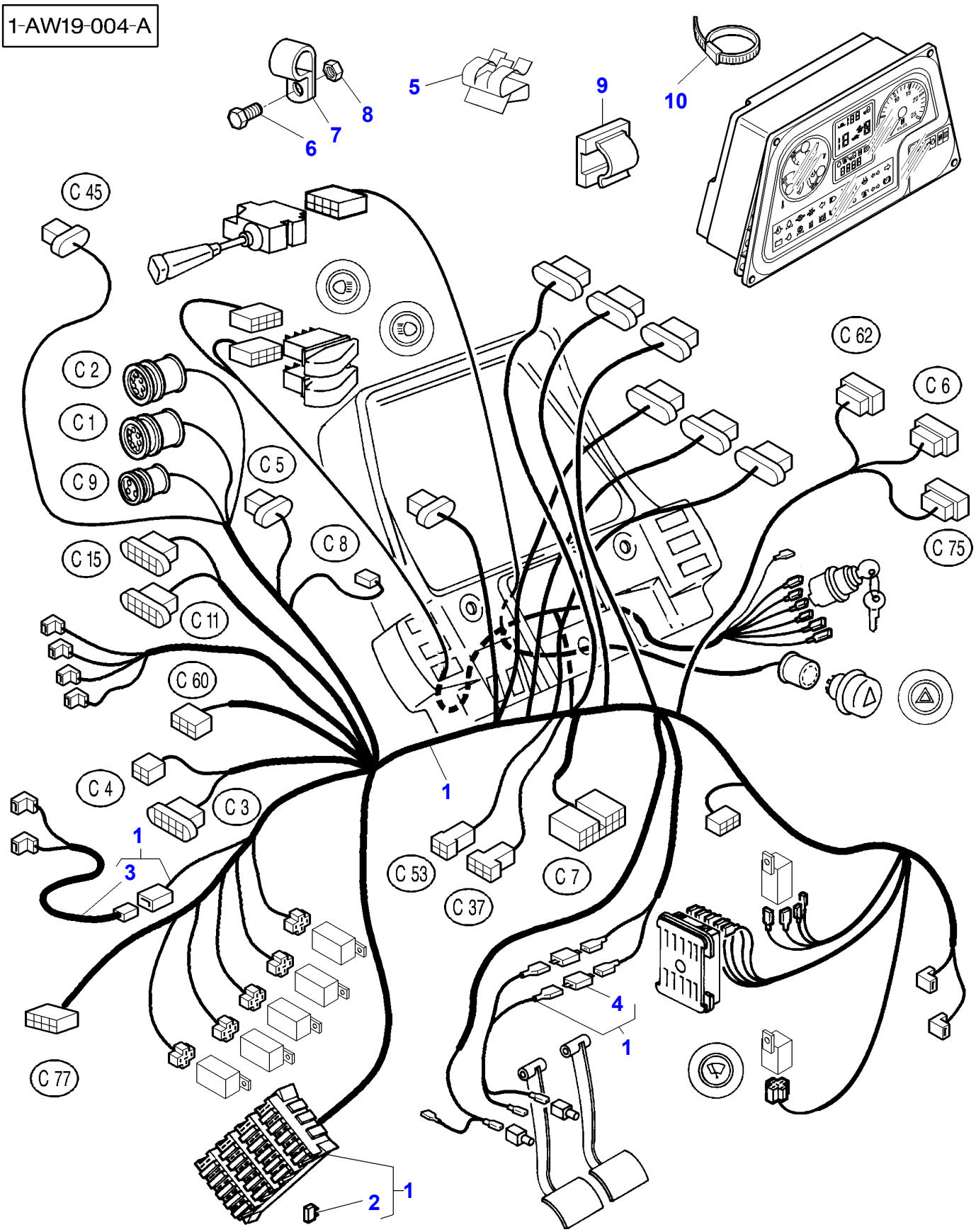
1-AW19-004-A
5
9
10
8
7
6
C 45
C 2
C 1
C 9
C 5
C 8
C 15
C 11
C 60
C 62
C 6
C 75
C 4
C 3
1
3
C 53
C 37
C 7
4
1
C 77
2
1

| Item | Part Number | Qty | Description | Comments |
|---|---|---|---|---|
| 1 | 3777516M94 | 1 | Harness | |
| 2 | **3580868M1** | 2 | Fuse | (1) 3 AMP |
| | **3387319M1** | 4 | Fuse | (1) 7,5 AMP |
| | **3620025M1** | 3 | Fuse | (1) 10 AMP |
| | **3620026M1** | 6 | Fuse | (1) 15 AMP |
| | **3387322M1** | 3 | Fuse | (1) 25 AMP |
| | **3712661M1** | 5 | Fuse | (1) 30 AMP |
| 3 | 3713090M1 | 1 | Harness | (1) |
| 4 | **3777531M1** | 2 | Diode | (1) 2X6AMP |
| 5 | 3618680M1 | 1 | Fastener | |
| 6 | 339123X1 | 3 | Hex. Sock. Screw | M8X20 |
| | 339761X1 | 1 | Hex. Sock. Screw | M8X25 |
| 7 | 3387756M1 | 4 | Strap | Diameter 16MM |
| 8 | 339169X1 | 2 | Nut | |
| 9 | 3760697M1 | X | Tie | |
| 10 | 3619622M1 | X | Cable Tie | |

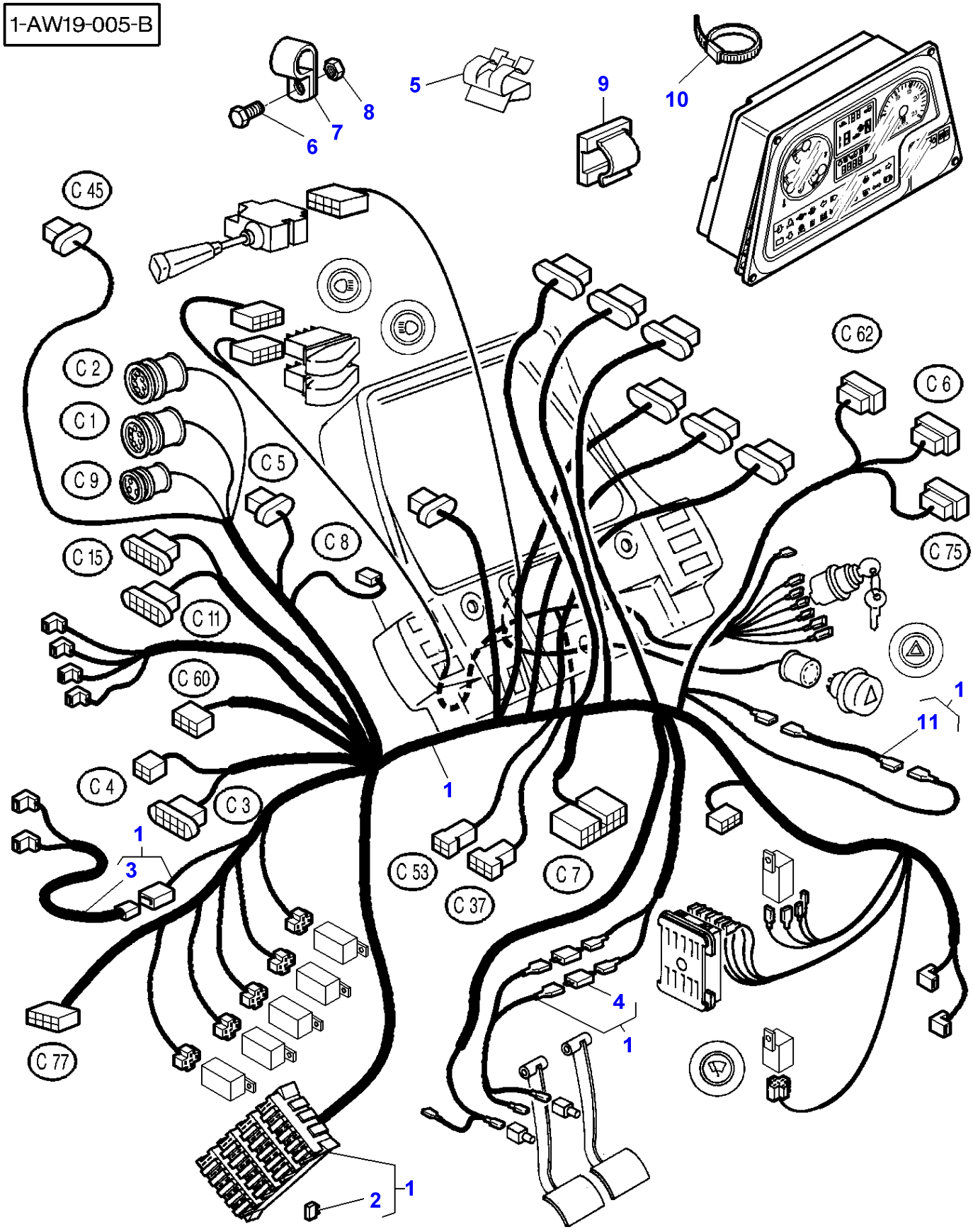
1-AW19-005-B
5
9
10
8
7
6
C 45
C 2
C 1
C 9
C 5
C 8
C 15
C 11
C 60
C 4
C 3
1
3
C 77
C 53
C 37
C 7
C 62
C 6
C 75
1
11
4
1
2
1

| Item | Part Number | Qty | Description | Comments |
|---|---|---|---|---|
| 1 | 3777514M94 | 1 | Harness | |
| | 3777634M93 | 1 | Harness | For Sweden |
| 2 | **3580868M1** | 2 | Fuse | (1)<br>3 AMP |
| | **3387319M1** | 4 | Fuse | (1)<br>7,5 AMP |
| | **3620025M1** | 3 | Fuse | (1)<br>10 AMP |
| | **3620026M1** | 6 | Fuse | (1)<br>15 AMP |
| | **3387322M1** | 3 | Fuse | (1)<br>25 AMP |
| | **3712661M1** | 5 | Fuse | (1)<br>30 AMP |
| 3 | 3713090M1 | 1 | Harness | (1) |
| 4 | **3777531M1** | 2 | Diode | (1)<br>2X6AMP |
| 5 | 3618680M1 | 1 | Fastener | |
| 6 | 339123X1 | 3 | Hex. Sock. Screw | M8X20 |
| | 339761X1 | 1 | Hex. Sock. Screw | M8X25 |
| 7 | 3387756M1 | 4 | Strap | Diameter 16MM |
| 8 | 339169X1 | 2 | Nut | |
| 9 | 3760697M1 | X | Tie | |
| 10 | 3619622M1 | X | Cable Tie | |
| 11 | 3781003M1 | 1 | Wire | (1)<br>From Serial or Engine Number G308029 |

1-AU16-629-A

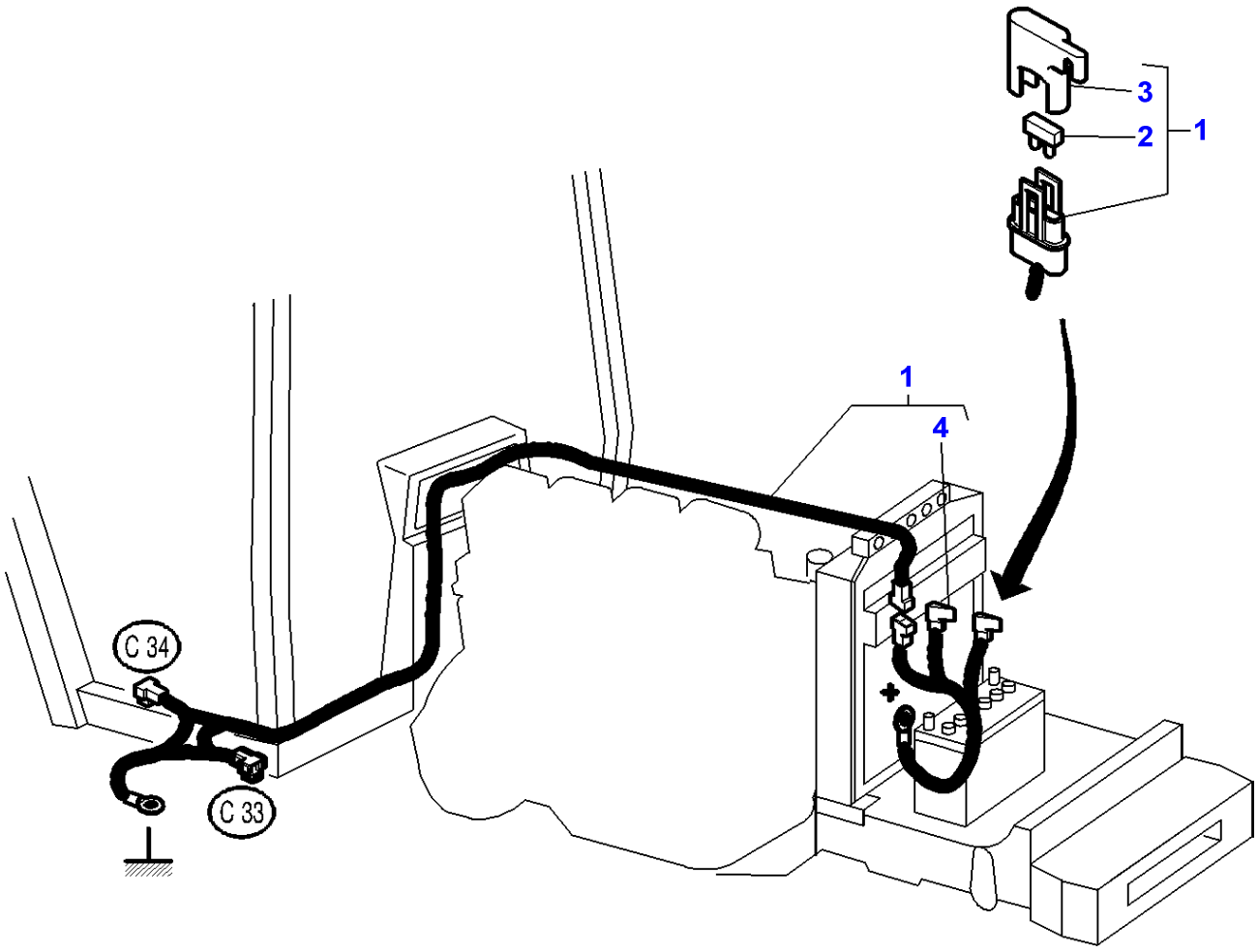

| Item | Part Number | Qty | Description | Comments |
|---|---|---|---|---|
| 1 | 3713301M92 | 1 | Harness | |
| 2 | **3387319M1** | 1 | Fuse | (1)<br>7,5 AMP |
| | **3620026M1** | 1 | Fuse | (1)<br>15 AMP |
| 3 | 3600224M1 | 2 | Cover | (1) |
| 4 | | 1 | Harness | (1)<br>Not serviced,order REF 1 |

1-AW23-002-B

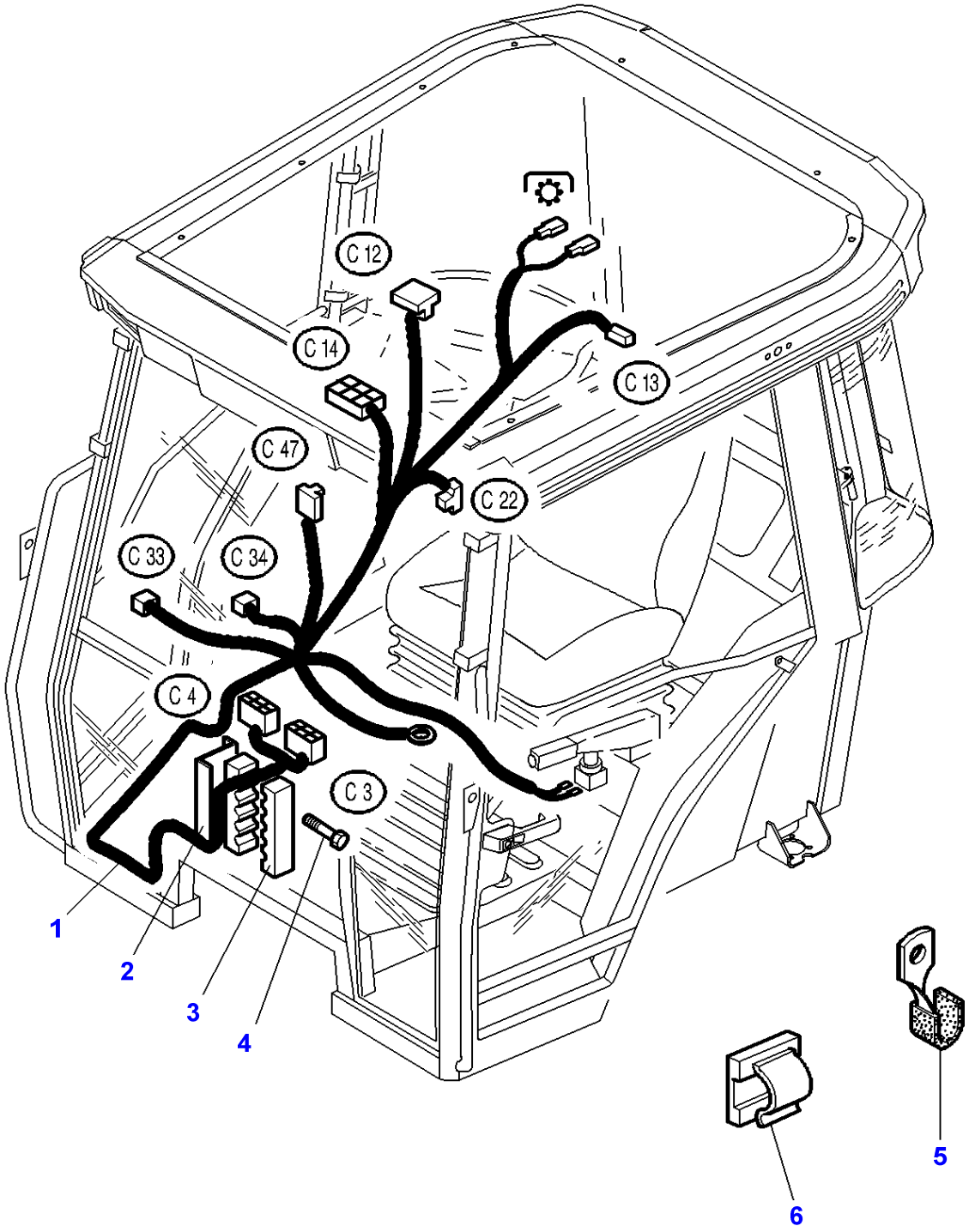

| Item | Part Number | Qty | Description | Comments |
|---|---|---|---|---|
| 1 | 3777520M1 | 1 | Harness | |
| 2 | 3583308M92 | 1 | Bridle | |
| 3 | 3713556M3 | 2 | Bridle | |
| 4 | 391074X1 | 1 | Hex. Sock. Screw | M6X12 |
| | 391884X1 | 1 | Bolt Metric | M6X50 |
| 5 | 3583345M1 | X | Strap | |
| 6 | 3760697M1 | X | Tie | |

1-AW24-001-A

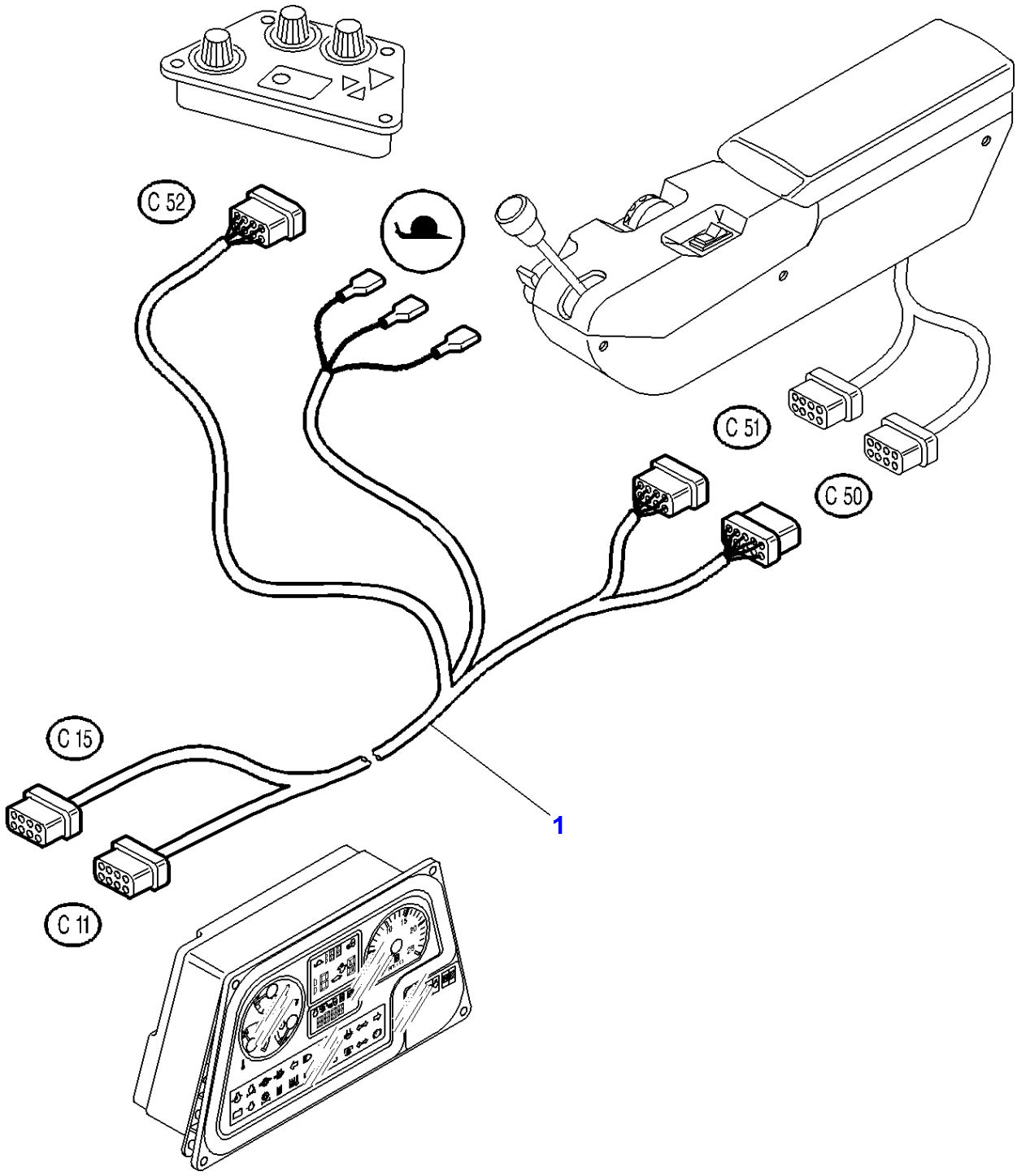

| Item | Part Number | Description |
|---|---|---|
| 1 | 3777521M1 | Harness |

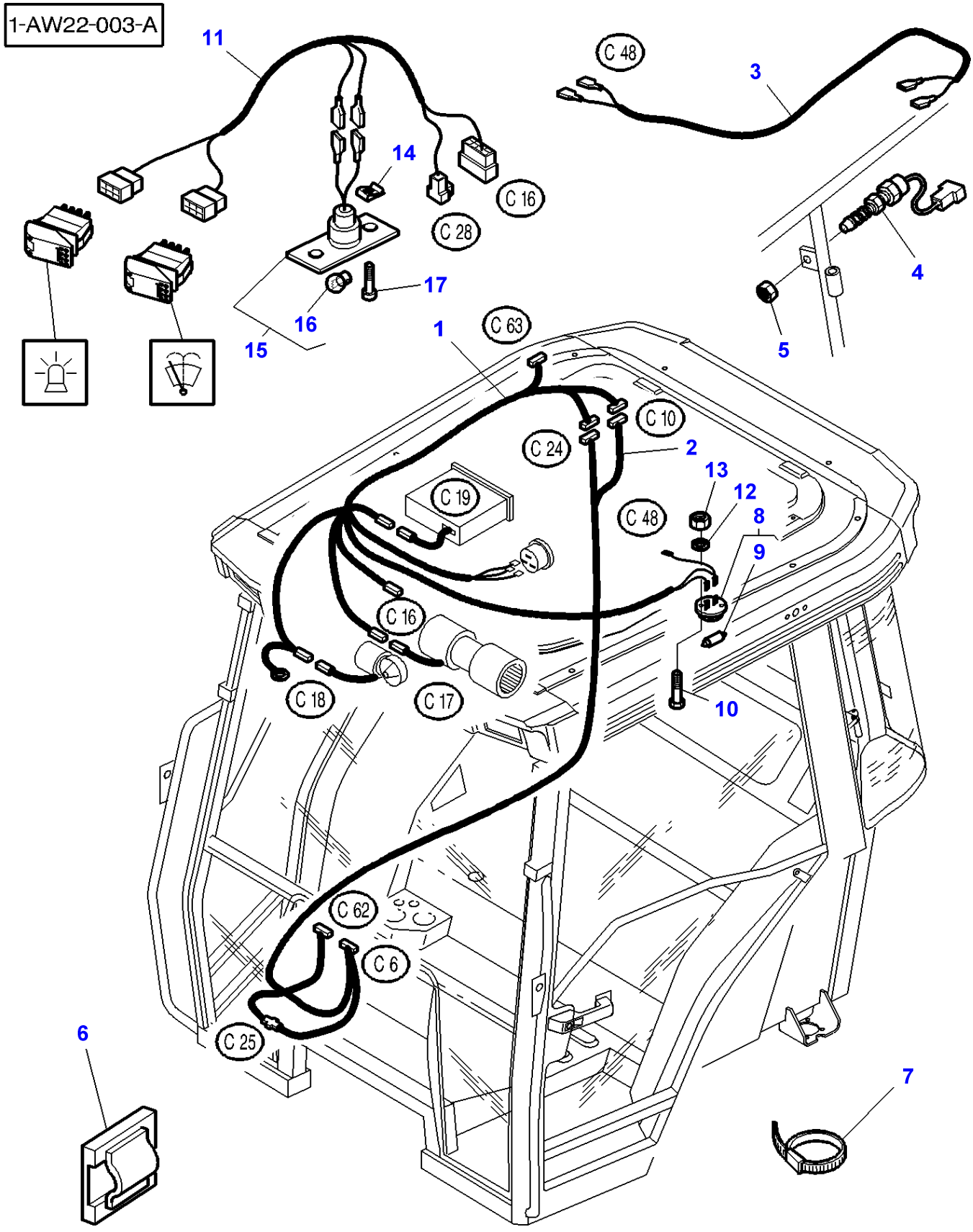
1-AW22-003-A
11
14
C 16
C 28
17
16
15
C 48
3
4
5
C 63
1
C 10
C 24
2
13
12
8
9
C 19
C 48
C 16
C 18
C 17
10
C 62
C 6
C 25
6
7

| Item | Part Number | Qty | Description | Comments |
|---|---|---|---|---|
| 1 | 3778208M1 | 1 | Harness | |
| 2 | 3778207M1 | 1 | Harness | |
| 3 | 3714845M1 | 1 | Harness | |
| 4 | **3780395M2** | 1 | Switch,Indirect | |
| 5 | 390333X1 | 1 | Nut Metric | M10 |
| 6 | 3760697M1 | X | Tie | |
| 7 | 3619622M1 | X | Cable Tie | |
| 8 | 3713129M1 | 1 | Roof Light | |
| 9 | **3385821M1** | 2 | Bulb 12v 10w | (8) |
| 10 | 3001162X1 | 2 | Screw | M4X18 |
| 11 | 3780127M1 | 1 | Harness | |
| 12 | 3001856X1 | 2 | Washer Metric | |
| 13 | 3019139X1 | 2 | Nut | M4 |
| 14 | 3010819X1 | 2 | Nut | M4 |
| 15 | 72502614 | 1 | Roof Light | |
| 16 | **71129920** | 1 | Bulb | (15)<br>N194 |
| 17 | 3009532X1 | 2 | Screw | M4x16 |

1-AW21-003-A

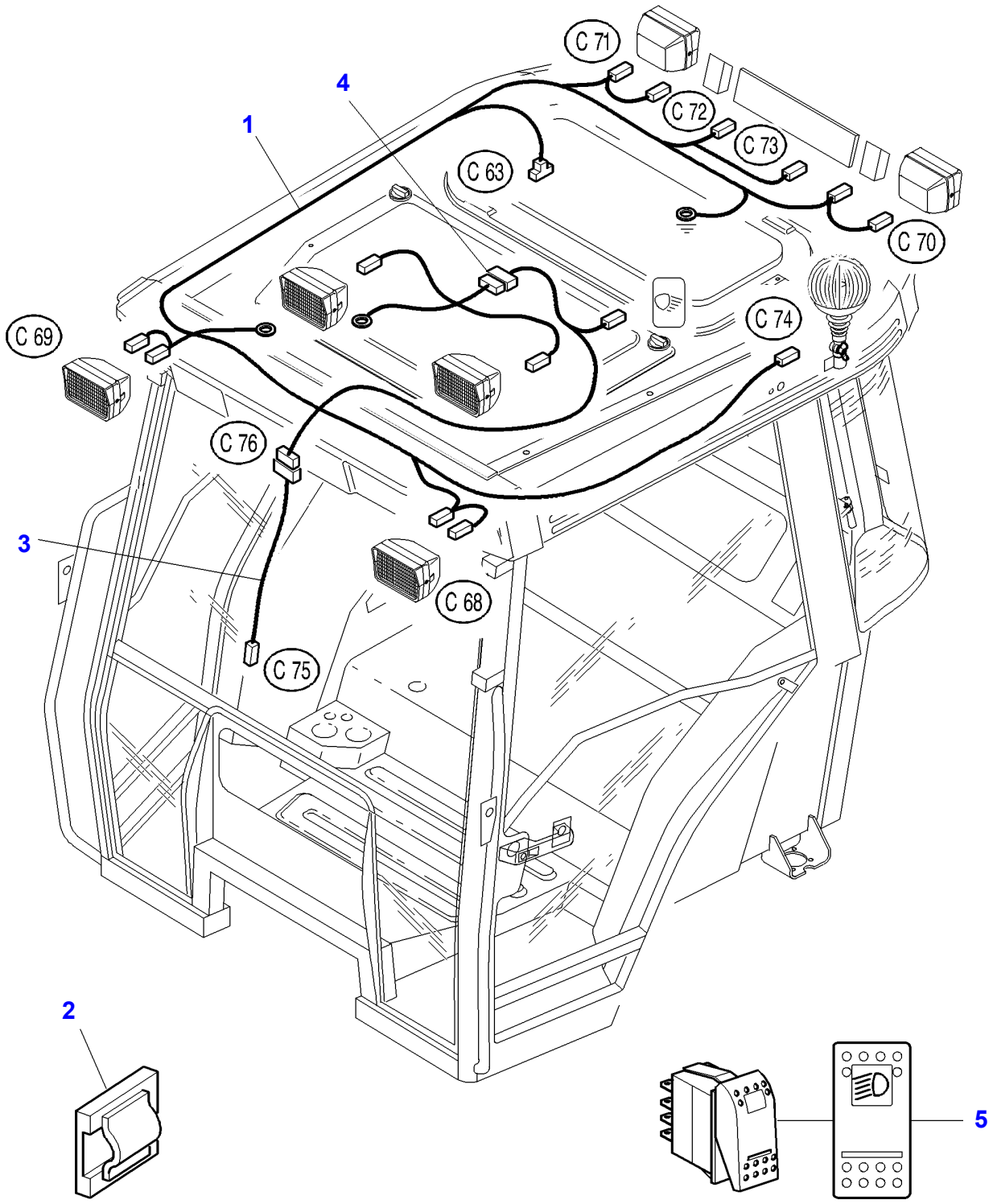

| Item | Part Number | Qty | Description |
|---|---|---|---|
| 1 | 3778212M1 | 1 | Harness |
| 2 | 3760697M1 | X | Tie |
| 3 | 3713331M1 | 1 | Harness |
| 4 | 3714887M92 | 1 | Harness |
| 5 | **3713145M1** | 1 | Switch,Indirect |

1-AU48-605-A

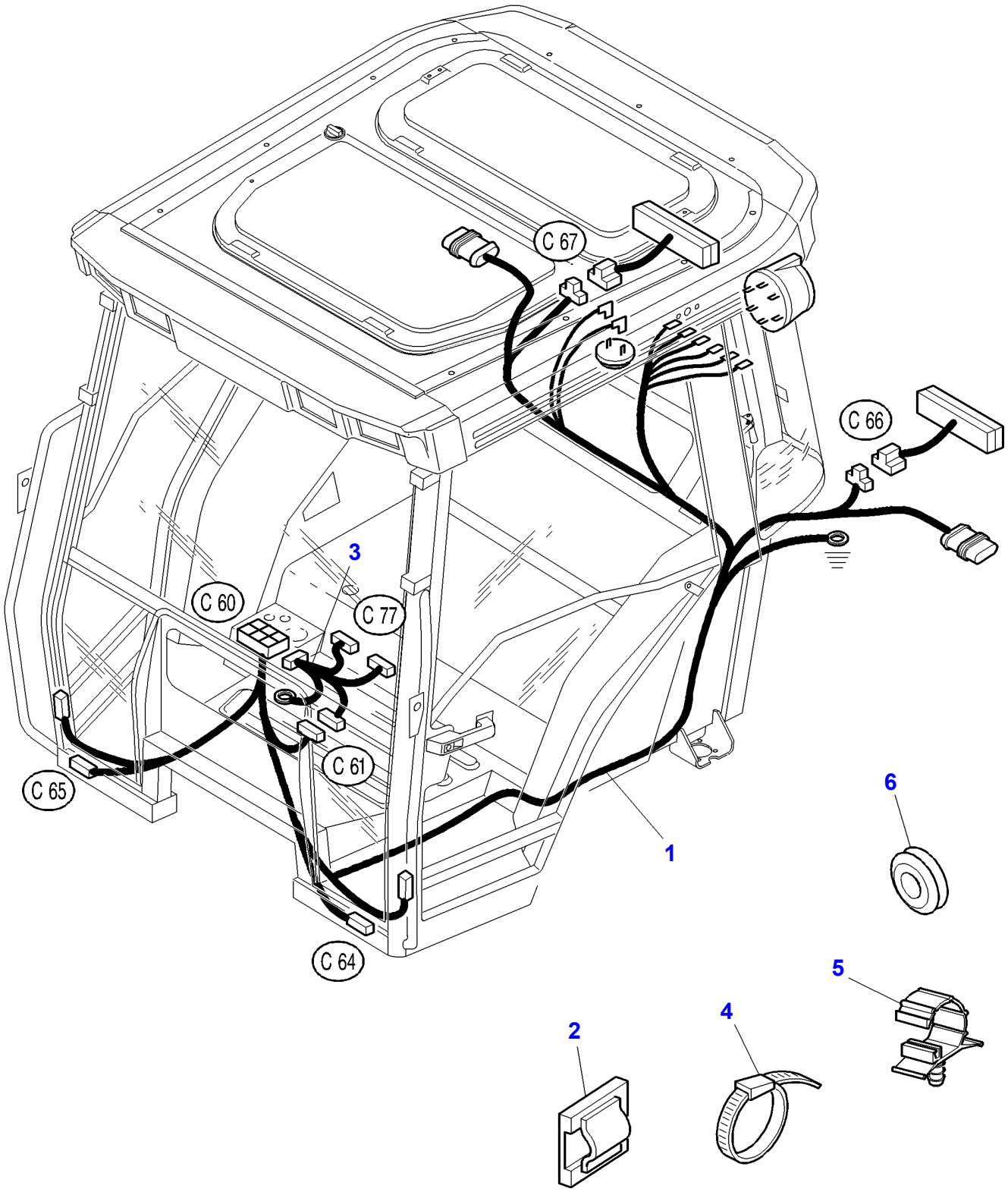

| Item | Part Number | Qty | Description | Comments |
|---|---|---|---|---|
| 1 | 3777528M2 | 1 | Harness | |
| 2 | 3760697M1 | 2 | Tie | |
| 3 | 3714433M1 | 1 | Harness | |
| 4 | 3619622M1 | X | Cable Tie | |
| 5 | 3715129M1 | 5 | Clamp | Diameter 20MM |
| | 3715130M1 | 3 | Clamp | Diameter 10MM |
| 6 | 3010670X1 | 1 | Grommet | |

1-AU48-606-A

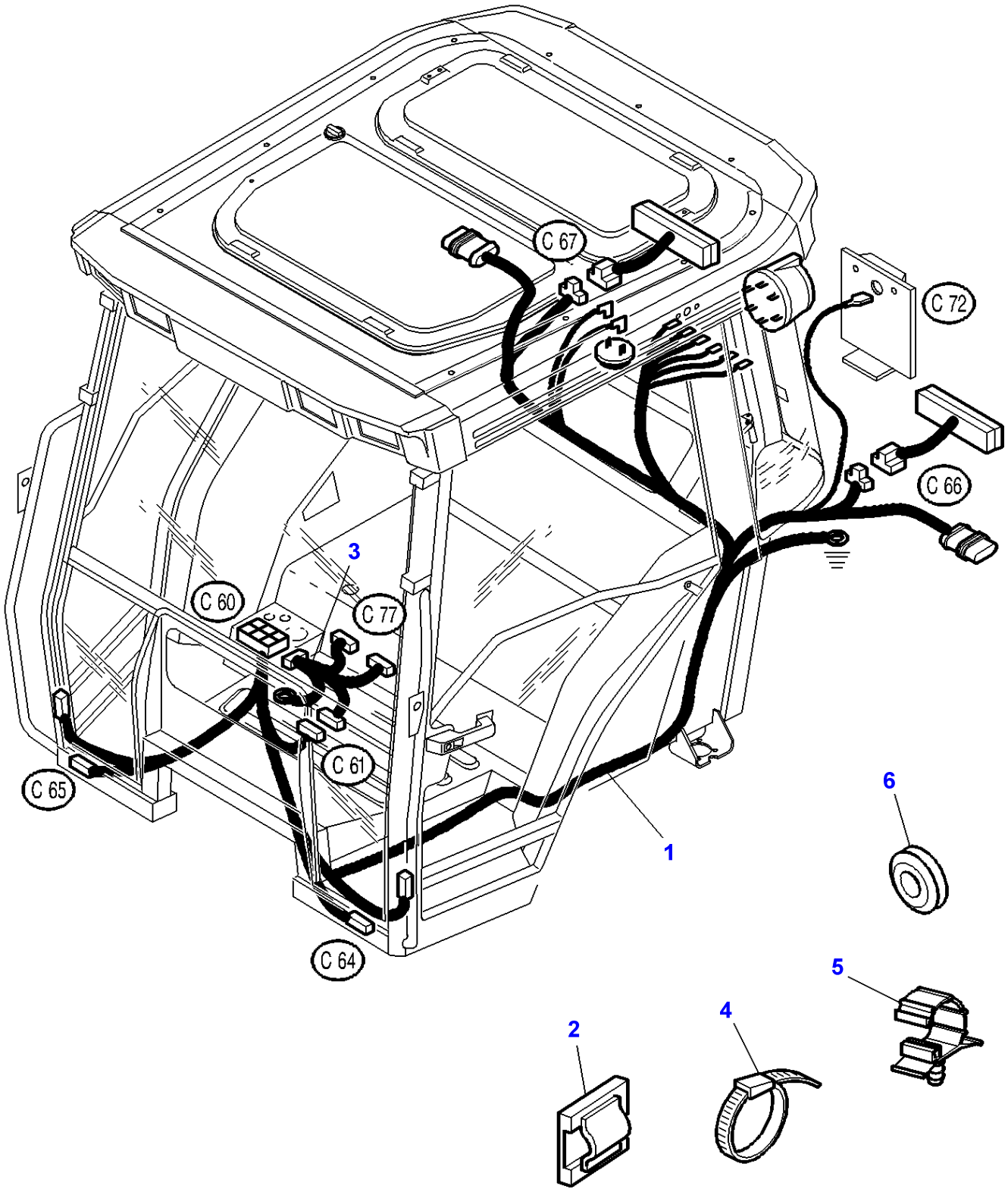

| Item | Part Number | Qty | Description | Comments |
|---|---|---|---|---|
| 1 | 3777530M2 | 1 | Harness | |
| 2 | 3760697M1 | 2 | Tie | |
| 3 | 3714433M1 | 1 | Harness | |
| 4 | 3619622M1 | X | Cable Tie | |
| 5 | 3715129M1 | 5 | Clamp | Diameter 20MM |
| | 3715130M1 | 3 | Clamp | Diameter 10MM |
| 6 | 3010670X1 | 1 | Grommet | |

| Page Title | Page Number |
|---|---|
| Electronic Lift - Main Harness | 090-0005 |
| Electronic Lift - Console | 090-0010 |
| Aboard Computer | 090-0015 |
| Aboard Computer - Transfers | 090-0020 |
| Aboard Computer - Wiring | 090-0025 |
| Radar | 090-0030 |
| Electronic Equipement - Control Box | 090-0035 |
| Electronic Equipment - Sensors | 090-0040 |
| FULL POWERSHIFT - TRANSMISSION MAIN HARNESS | 090-0045 |
| FULL POWERSHIFT - TRANSMISSION MAIN HARNESS - Emergency Harness | 090-0050 |

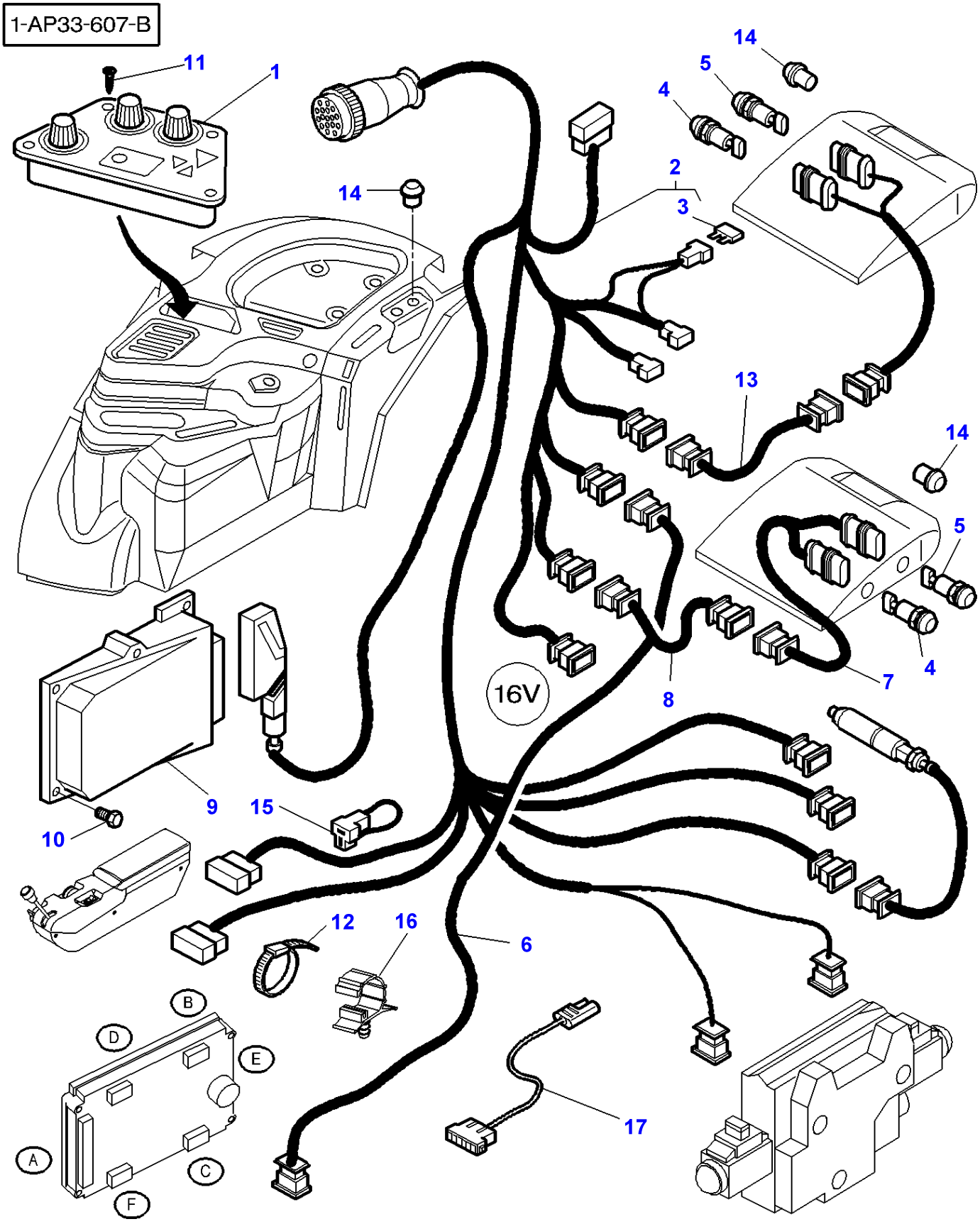
1-AP33-607-B
11
1
14
5
4
2
3
14
13
14
5
4
7
8
16V
9
15
10
12
16
6
B
D
E
A
C
F
17

| Item | Part Number | Qty | Description | Comments |
|---|---|---|---|---|
| 1 | 3778510M93 | 1 | Electron Console | |
| 2 | 3778505M92 | 1 | Elect.Lift Cable | |
| 3 | **3580868M1** | 1 | Fuse | (2)<br>3 AMP |
| 4 | **3714137M1** | 2 | Switch,Indirect | [A] |
| 5 | **3714138M1** | 2 | Switch,Indirect | [B] |
| 6 | 3778707M1 | 1 | Harness | |
| 7 | 3714135M1 | 2 | Harness | |
| 8 | 3712725M1 | 1 | Harness | Left Hand<br>Length 3500 MM |
| 9 | 3779194M93 | 1 | Calculator | |
| 10 | 3010506X1 | 2 | Screw | |
| 11 | 3010506X1 | 4 | Screw | |
| 12 | 3619622M1 | 20 | Cable Tie | |
| 13 | 3712726M1 | 1 | Harness | Right Hand |
| 14 | 3380422M1 | X | Plug | |
| 15 | 3715934M1 | 1 | Harness | |
| 16 | 3715129M1 | 2 | Clamp | Diameter 20MM |
| | 3715130M1 | 2 | Clamp | Diameter 10MM |
| 17 | 3779558M1 | 1 | Harness | [C] |

**FOOTNOTE [A]** UP
**FOOTNOTE [B]** DOWN
**FOOTNOTE [C]** DATATRONIC HARNESS : THEORETICAL SPEED

1-AP37-601-A

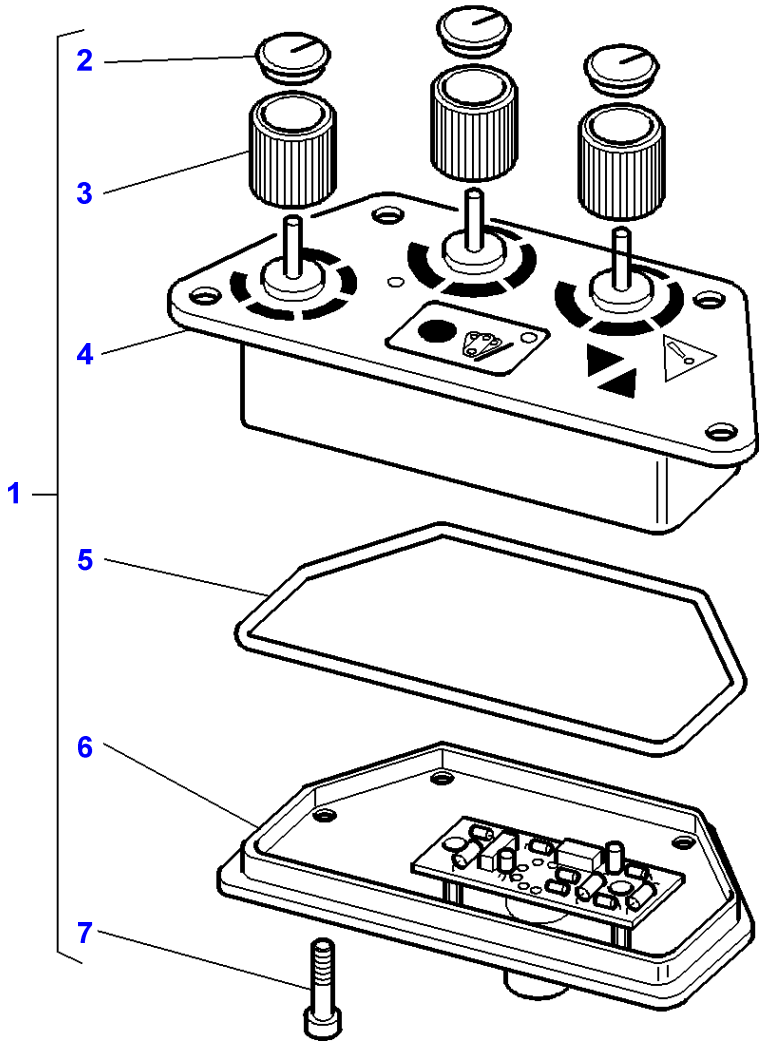

| Item | Part Number | Qty | Description | Comments |
|---|---|---|---|---|
| 1 | 3778510M93 | 1 | Electron Console | |
| 2 | 3902440M1 | 3 | Helmet | (1) |
| 3 | 3902808M1 | 3 | Button | (1) Up to Serial or Engine Number H140013 |
| | 3903452M1 | 3 | Button | (1) From Serial or Engine Number H140014 |
| 4 | 3902809M92 | 1 | Cover | (1) |
| 5 | 3902452M1 | 1 | O Ring | (1) |
| 6 | 3902810M91 | 1 | Printed Circuit | (1) |
| 7 | 3902811M1 | 4 | Screw | (1) |

1-AU31-603-A

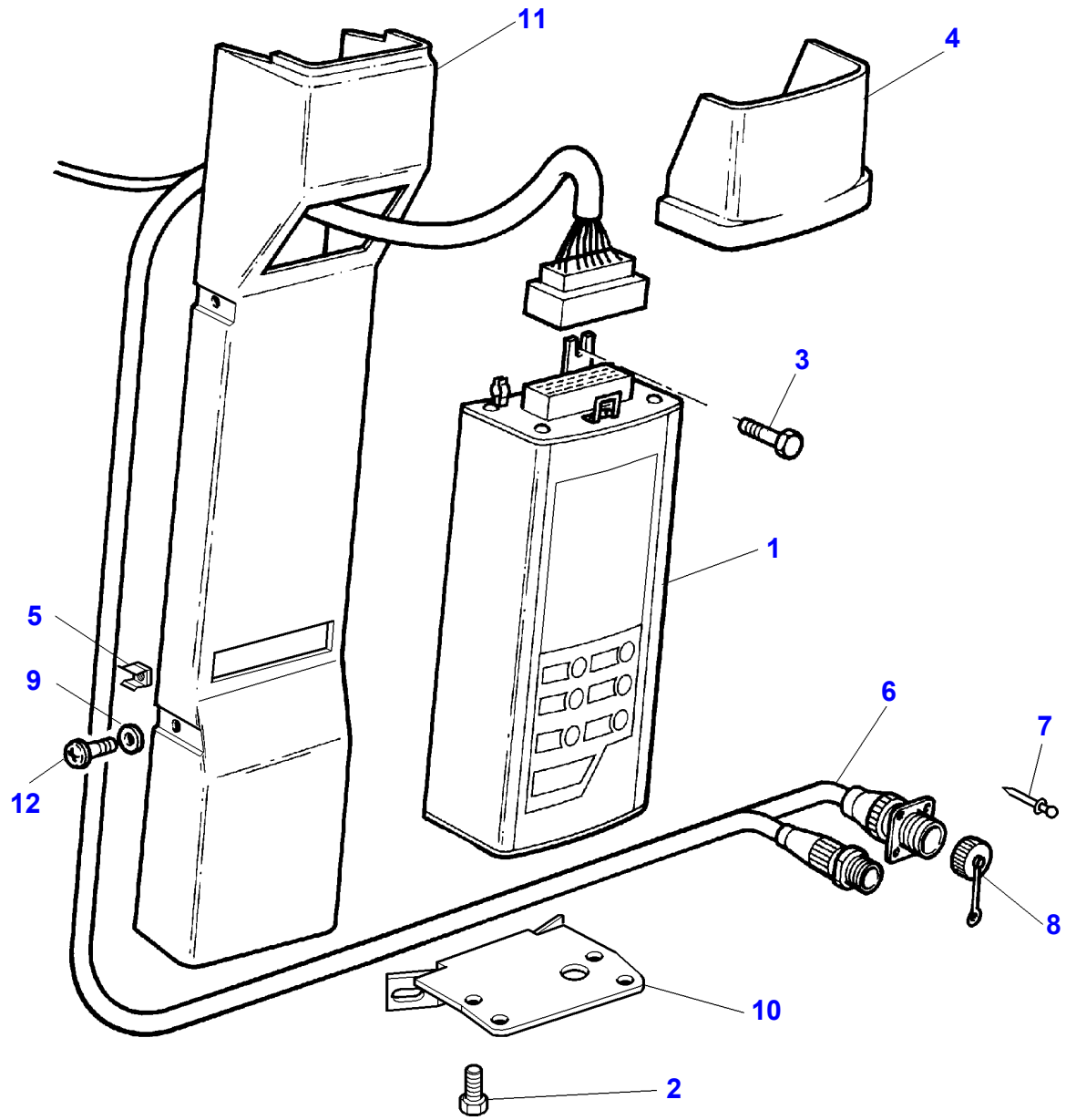

| Item | Part Number | Qty | Description | Comments |
|---|---|---|---|---|
| 1 | 3792437M92 | 1 | Onboard Computor | |
| 2 | 3010578X1 | 2 | Screw | |
| 3 | 3010506X1 | 3 | Screw | M5X16 |
| 4 | 3714916M1 | 1 | Moulding | |
| 5 | 3615557M1 | 7 | Boxnut | |
| 6 | | 1 | Harness | See Page - Reference Number 090-0025/1 |
| 7 | 338980X1 | 4 | Rivet | |
| 8 | 3900383M1 | 1 | Plug | |
| 9 | 1427000M1 | 4 | Washer | |
| 10 | 3714918M2 | 1 | Support | |
| 11 | 3714919M1 | 1 | Mounting | |
| 12 | 3580257M1 | 4 | Screw | |

1-AU32-600-A

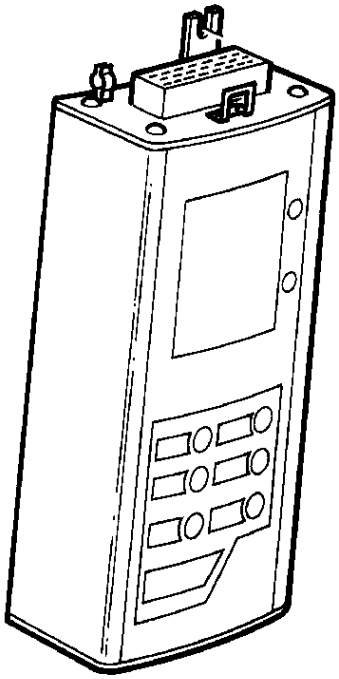

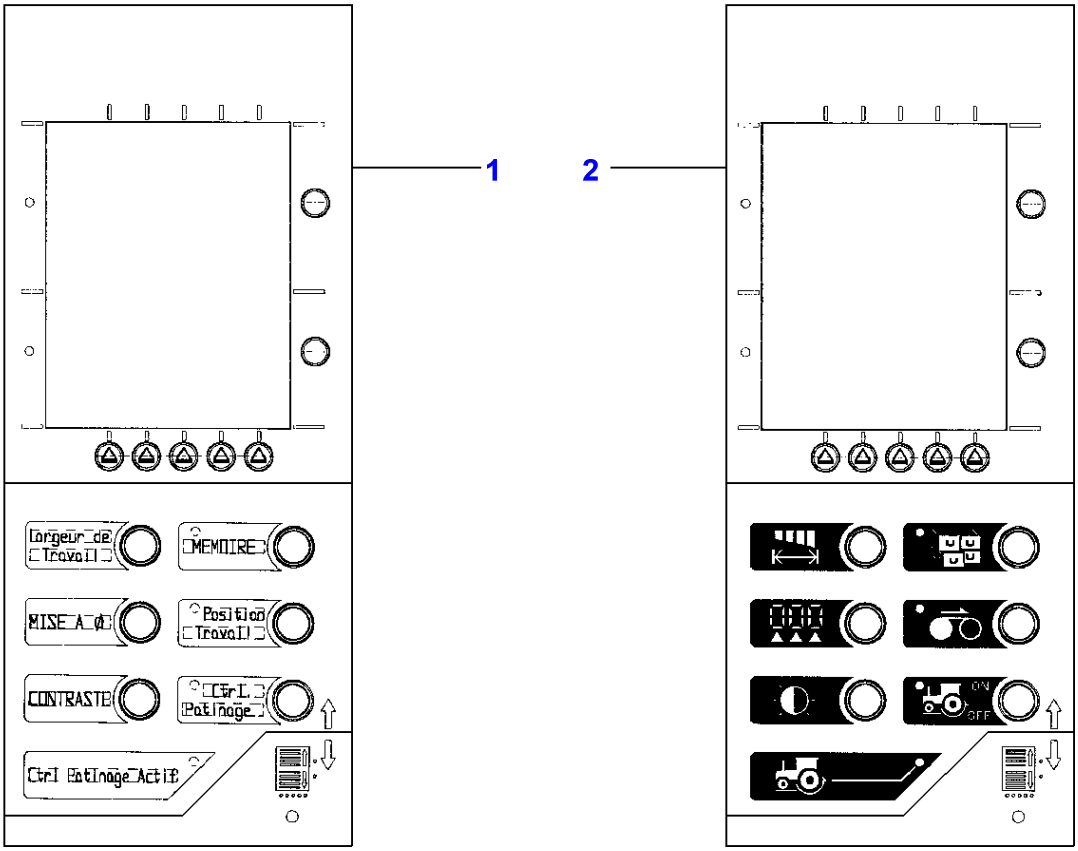

| Item | Part Number | Qty | Description | Comments |
|---|---|---|---|---|
| 1 | 3714660M1 | 1 | Decal | For France only or any text in French only |
| | 3714661M1 | 1 | Decal | For UK only or any text in English only |
| | 3714662M1 | 1 | Decal | For Germany only or any text in German only |
| | 3714664M1 | 1 | Decal | [A] |
| 2 | 3714665M1 | 1 | Decal | |

**FOOTNOTE [A]** SPAIN

1-AU35-600-B

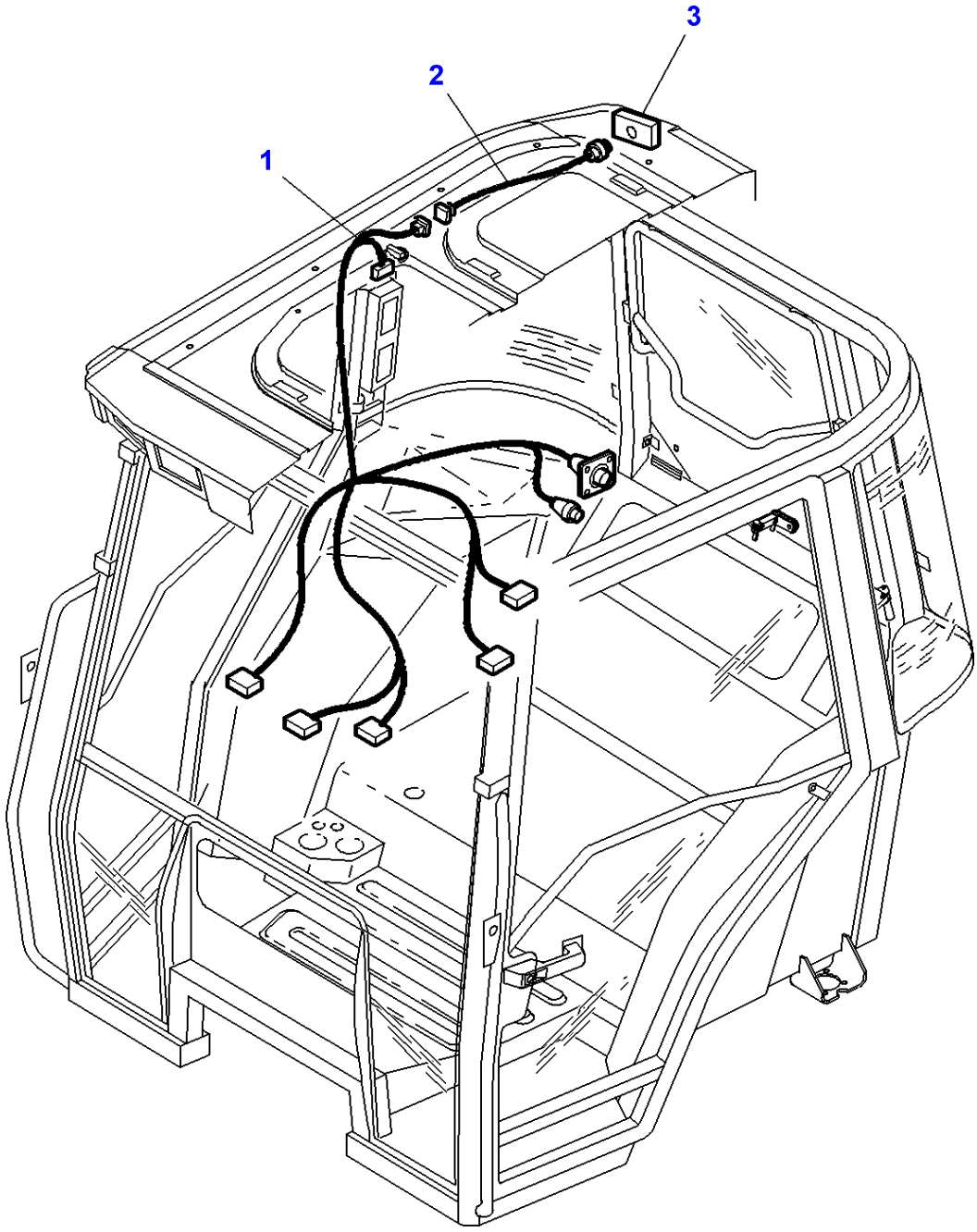

| Item | Part Number | Qty | Description |
|---|---|---|---|
| 1 | 3778701M3 | 1 | Harness |
| 2 | 3714262M1 | 1 | Harness |
| 3 | 3714264M1 | 1 | Transmitter |

**FOOTNOTE [A]** FUEL FLOWMETER

1-AU34-602-A

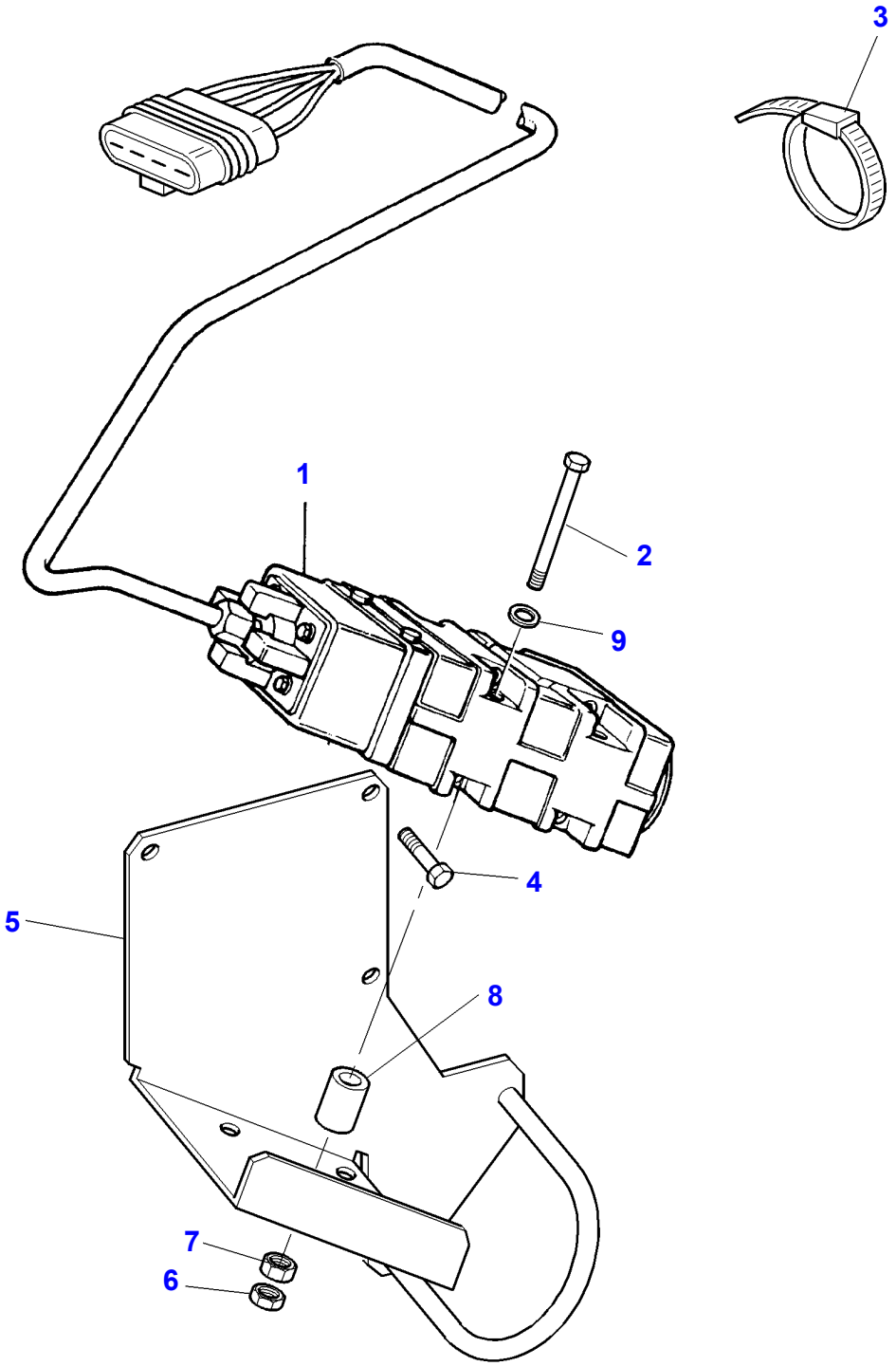

| Item | Part Number | Qty | Description | Comments |
|---|---|---|---|---|
| 1 | 3714291M2 | 1 | Speed Detector | GHZ 24.125 |
| | 3714290M2 | 1 | Speed Detector | GHZ 24.300 |
| | | | | For UK only or any text in English only |
| 2 | 3019894X1 | 4 | Screw | M6X100 |
| 3 | 3619622M1 | X | Cable Tie | |
| 4 | 339123X1 | 3 | Hex. Sock. Screw | M8X20 |
| 5 | 3778933M1 | 1 | Support | |
| 6 | 1440207X1 | 4 | Nut Metric | Replace and repair. Old interchangeable with new 392308X1 |
| 7 | 339030X1 | 4 | Nut Metric | |
| 8 | 3582802M1 | 4 | Spacer | |
| 9 | 391038X1 | 12 | Washer | |

**FOOTNOTE [A]** WITH ADDITIONAL FUEL TANK

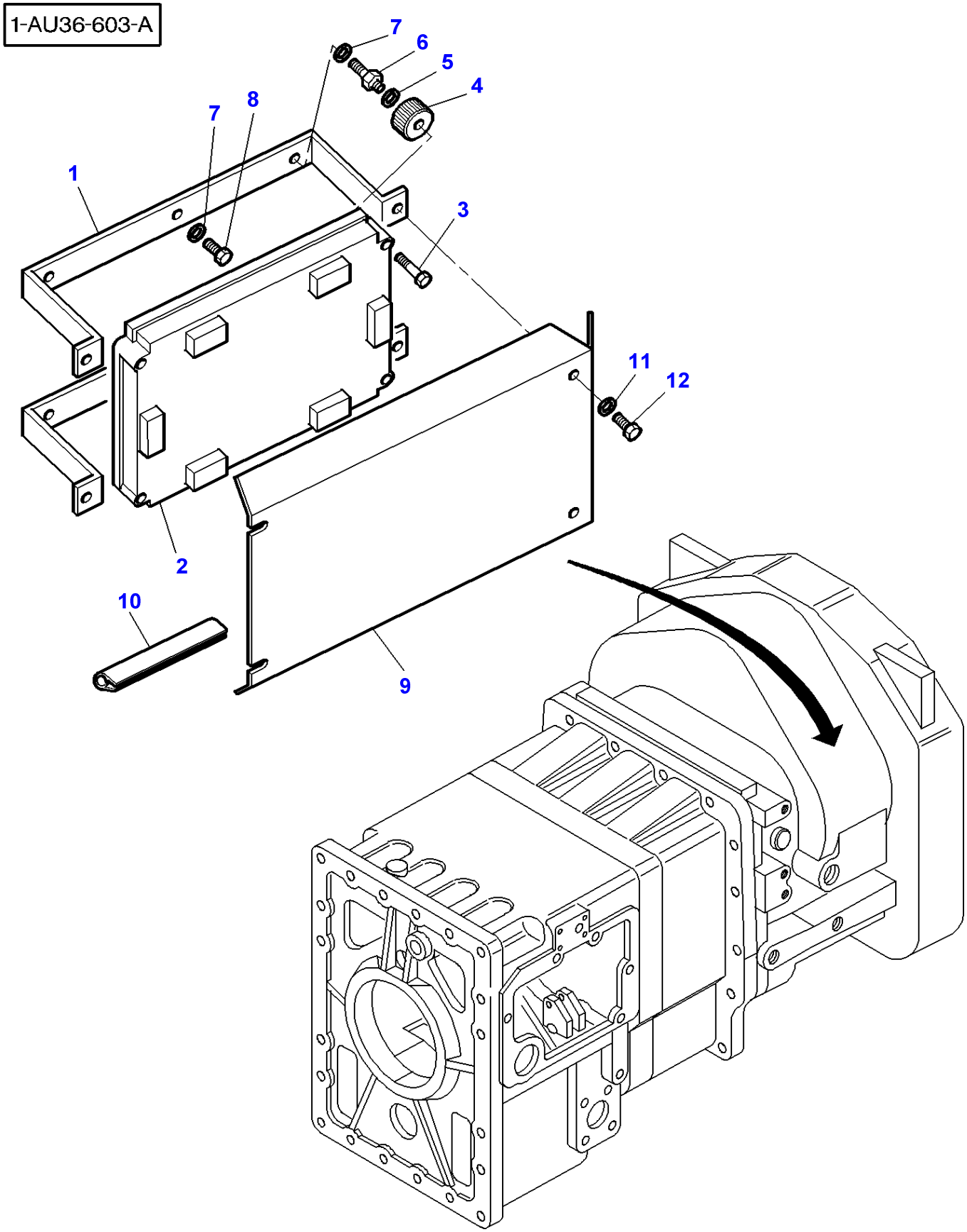
1-AU36-603-A
7
6
5
4
7
8
1
3
11
12
2
10
9

| Item | Part Number | Qty | Description | Comments |
|---|---|---|---|---|
| 1 | 3790912M1 | 2 | Support | |
| 2 | 3791704M95 | 1 | Switch Box | |
| 3 | 339096X1 | 4 | Bolt Metric | M6X35 |
| 4 | 3790853M1 | 4 | Support | |
| 5 | 391289X1 | 4 | Lock Washer | |
| 6 | 3791098M1 | 4 | Screw | M6/M8 |
| 7 | 22428X | 5 | Lock Washer | |
| 8 | 339228X1 | 1 | Screw Metric | M8X12 |
| 9 | 3790911M2 | 1 | Cowl | |
| 10 | 3580695M1 | 4 | Gasket | |
| 11 | 390972X1 | 4 | Washer Metric | |
| 12 | 339228X1 | 4 | Screw Metric | M8X12 |

1-AU37-606-B

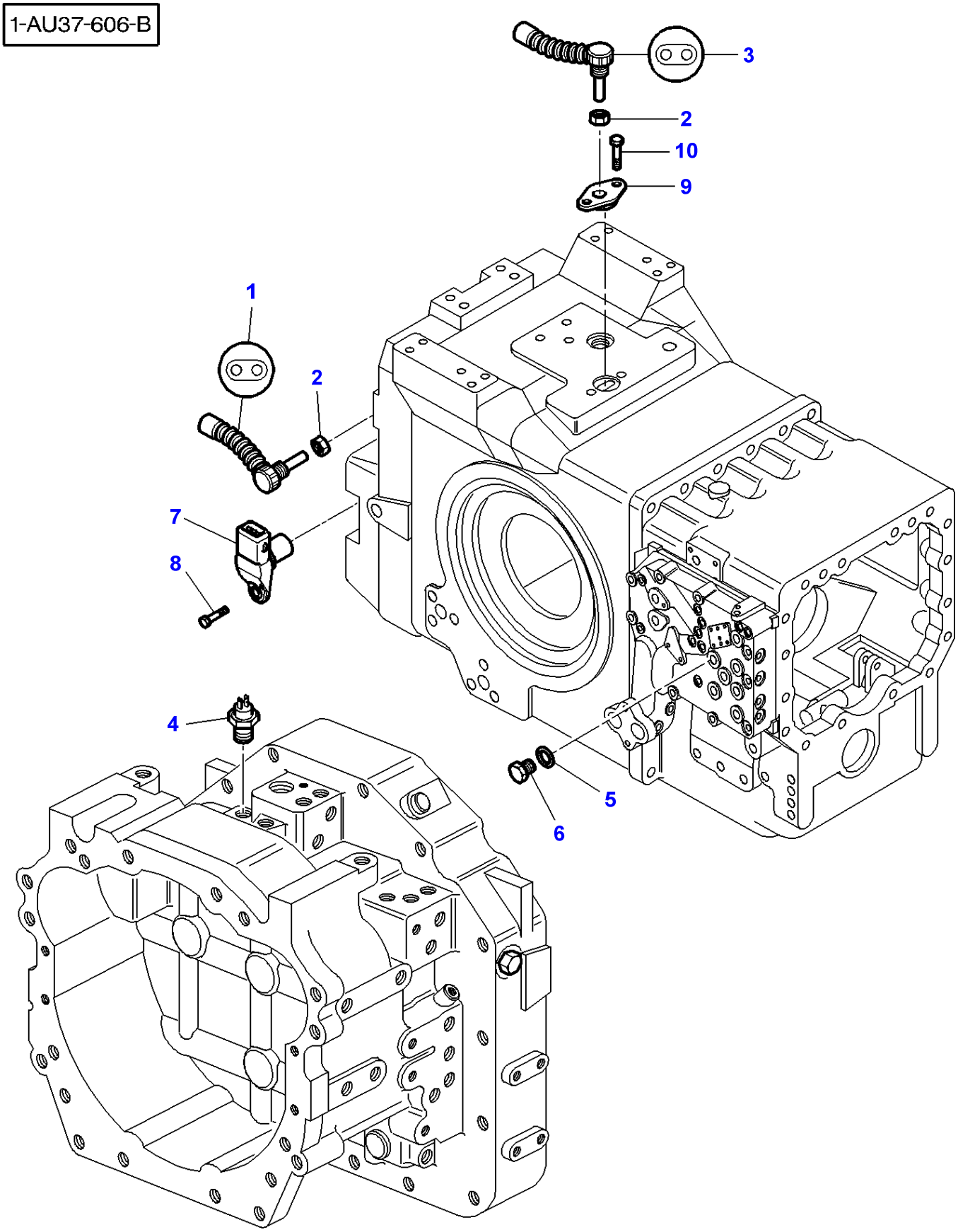

| Item | Part Number | Qty | Description | Comments |
|---|---|---|---|---|
| 1 | **3790881M1** | 1 | Inductive Taker | [B]<br>Length 75MM |
| 2 | 339592X1 | 2 | Nut Metric | |
| 3 | **3583287M2** | 1 | Inductive Taker | [A]<br>Length 150MM |
| 4 | **3381387M4** | 1 | Low Pr.Oil Trmtr | |
| 5 | 390202X1 | 1 | Seal | |
| 6 | 339494X1 | 1 | Plug | |
| 7 | **3716042M1** | 1 | Pto Speed Sensor | |
| 8 | 3009280X1 | 1 | Screw | M6X12 |
| 9 | 3716581M3 | 1 | Support | |
| | 3792114M1 | 1 | Support | [C] |
| 10 | 339761X1 | 2 | Hex. Sock. Screw | M8x25 |

**FOOTNOTE [A]** TRAVELLING SPEED
**FOOTNOTE [B]** PTO SPEED
**FOOTNOTE [C]** WITH KIT,BEVEL GEAR 8X43

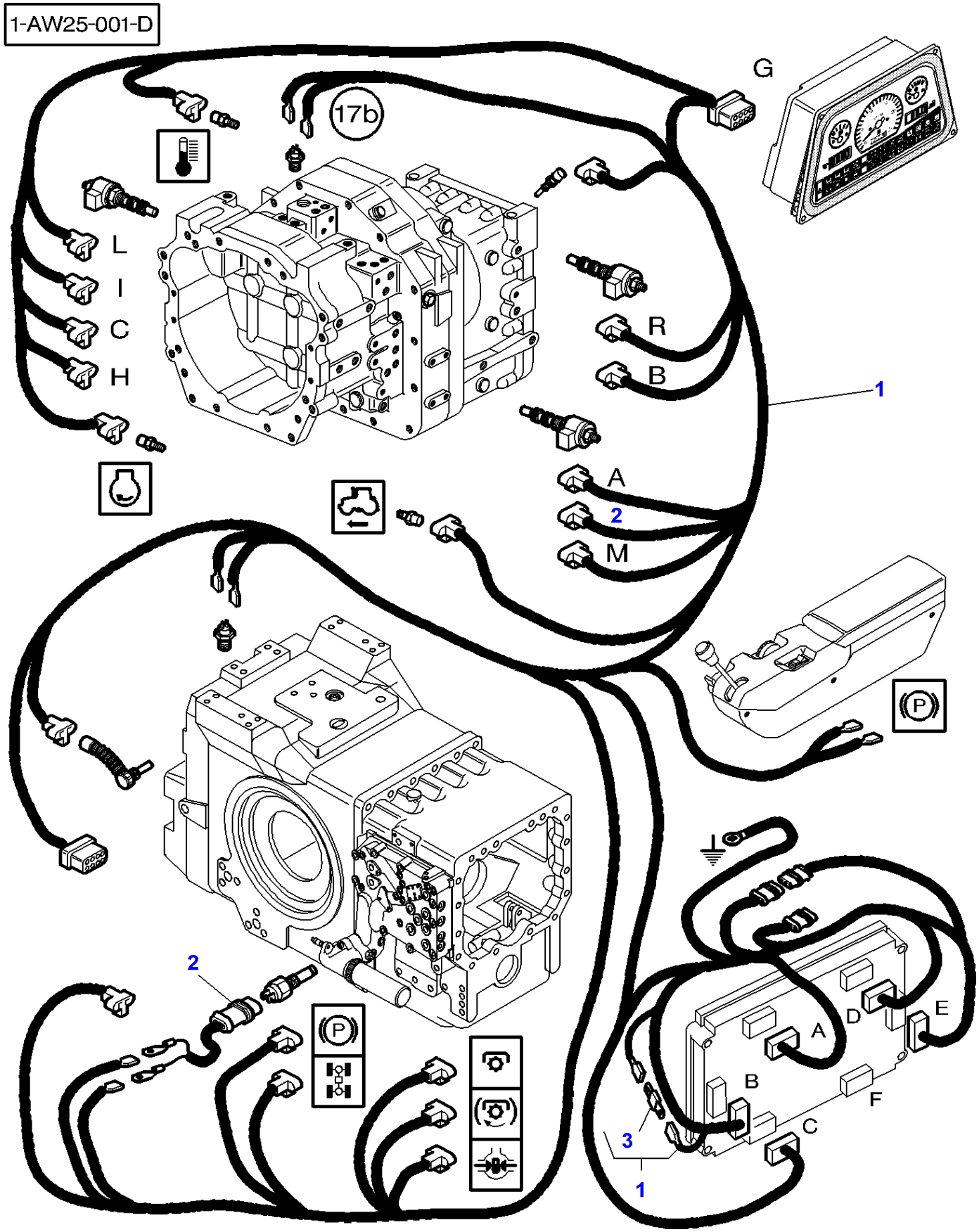
1-AW25-001-D
17b
G
L
I
C
H
R
B
A
2
M
1
P
2
P
D
E
A
B
F
C
3
1

| Item | Part Number | Qty | Description | Comments |
|---|---|---|---|---|
| 1 | 3790909M3 | 1 | Harness | Up to Serial or Engine Number G260027 |
| | 3790909M5 | 1 | Harness | From Serial or Engine Number G260028 |
| 2 | 3792198M1 | 1 | Harness | Up to Serial or Engine Number G260027 |
| 3 | 3779377M1 | 1 | Diode | (1) |

1-AW25-002-A

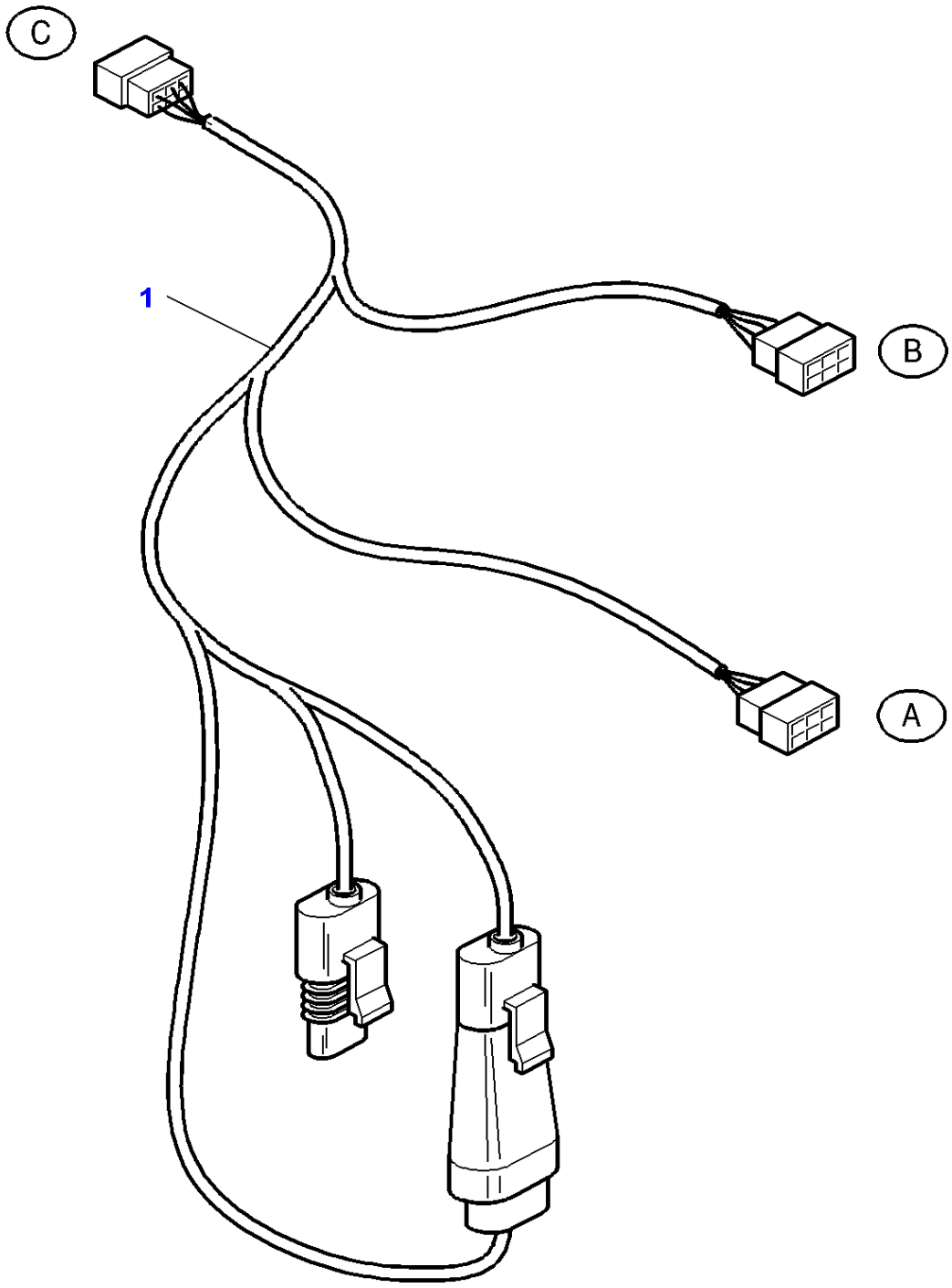

| Item | Part Number | Qty | Description |
|---|---|---|---|
| 1 | 3791105M2 | 1 | Harness |

| Page Title | Page Number |
|---|---|
| Tool Box | 100-0005 |
| Sheet Metal - Grille | 100-0010 |
| Sheet Metal - Hood | 100-0015 |
| Sheet Metal - Hood - Brackets And Assembling Parts | 100-0020 |
| Step Plate - Wedge Wheel - Support | 100-0025 |
| Tractor Cab - Cab Mountings - Brackets And Guards - Up To H091014 | 100-0030 |
| Tractor Cab - Fenders | 100-0035 |
| Emblems | 100-0040 |
| Decals - Speed Charts | 100-0045 |
| Decals - Safety | 100-0050 |

1-AR08-604-A

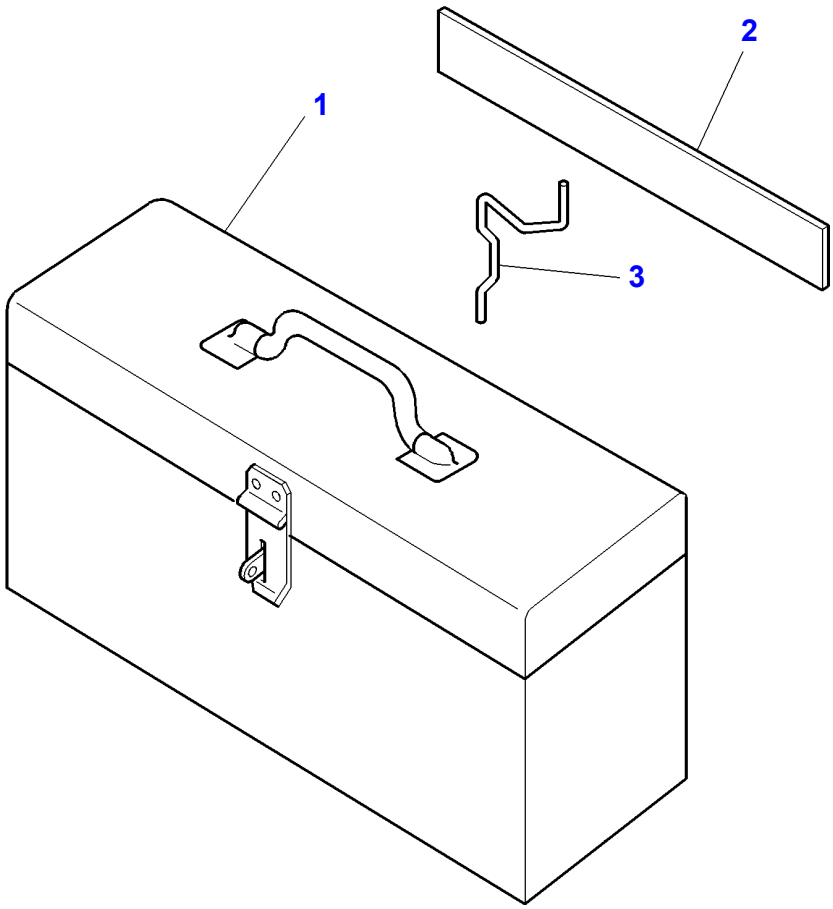

| Item | Part Number | Qty | Description | Comments |
|---|---|---|---|---|
| 1 | 3616340M1 | 1 | Tool Box | |
| 2 | 3580639M1 | 1 | Gasket | Length 200MM |
| 3 | 3580564M1 | 1 | Eccentric | |

1-AR02-600-B

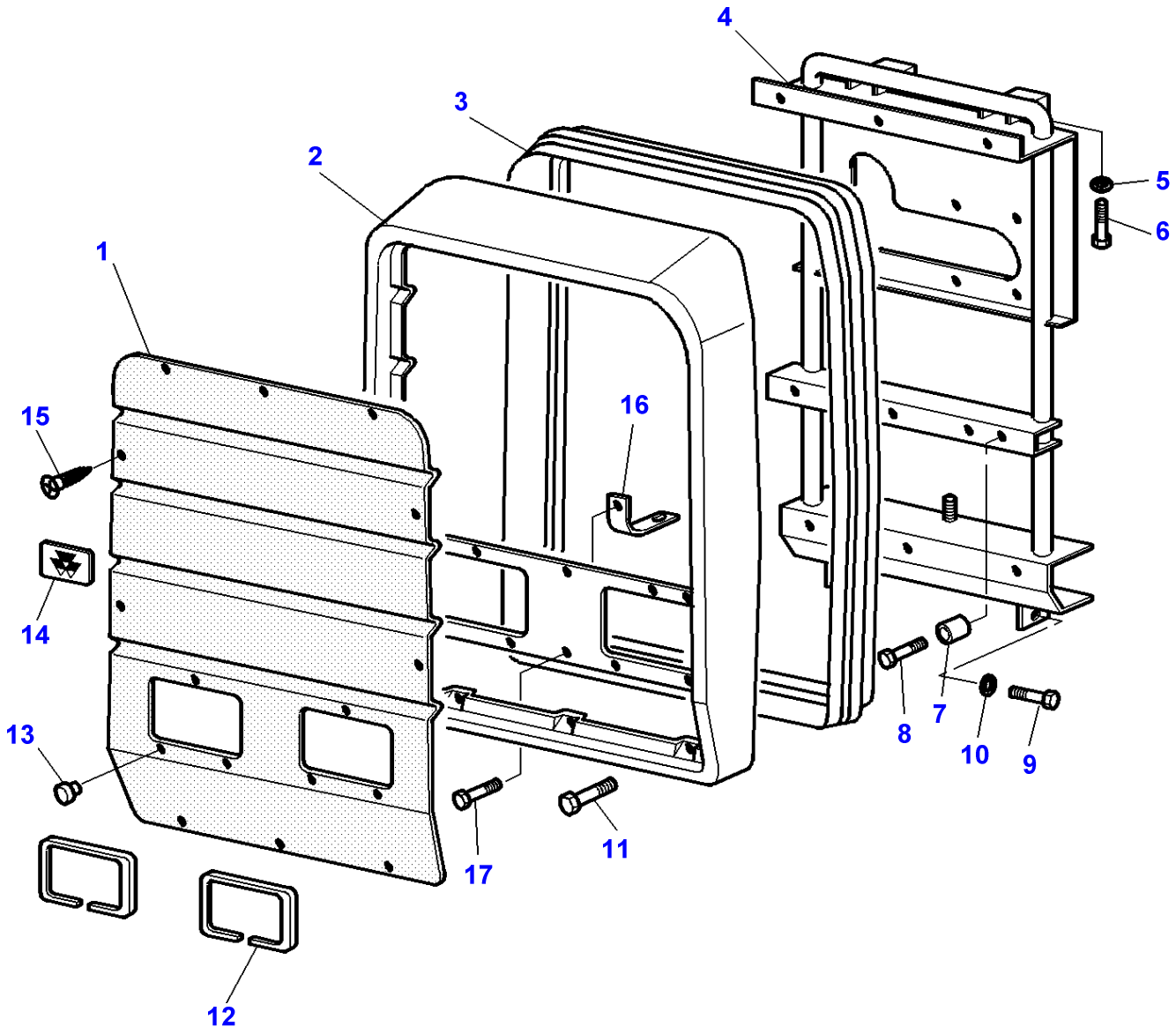

| Item | Part Number | Qty | Description | Comments |
|---|---|---|---|---|
| 1 | 3713209M1 | 1 | Grille | |
| 2 | 3713208M1 | 1 | Screen | |
| 3 | 3714392M91 | 1 | Gasket | |
| 4 | 3713213M92 | 1 | Frame Assy | |
| 5 | 390734X1 | 2 | Washer | |
| 6 | 339081X1 | 2 | Screw Metric | M10X20 |
| 7 | 3713210M1 | 3 | Spacer | |
| 8 | 339096X1 | 3 | Bolt Metric | M6X35 |
| 9 | 339081X1 | 2 | Screw Metric | M10X20 |
| 10 | 390734X1 | 2 | Washer | |
| 11 | 339666X1 | 6 | Hex. Sock. Screw | M6X20 |
| 12 | 3389462M1 | 2 | Gasket | Length 560MM |
| 13 | 1699748M1 | 6 | Plug | |
| 14 | 3618969M91 | 1 | Emblem | |
| 15 | 380027X1 | 10 | Screw | Replace and repair. Old not interchangeable with new 3010536X1 |
| 16 | 3714523M1 | 1 | Strap | |
| 17 | 339262X1 | 1 | Bolt Metric | M6X30 |

1-AR03-623-A

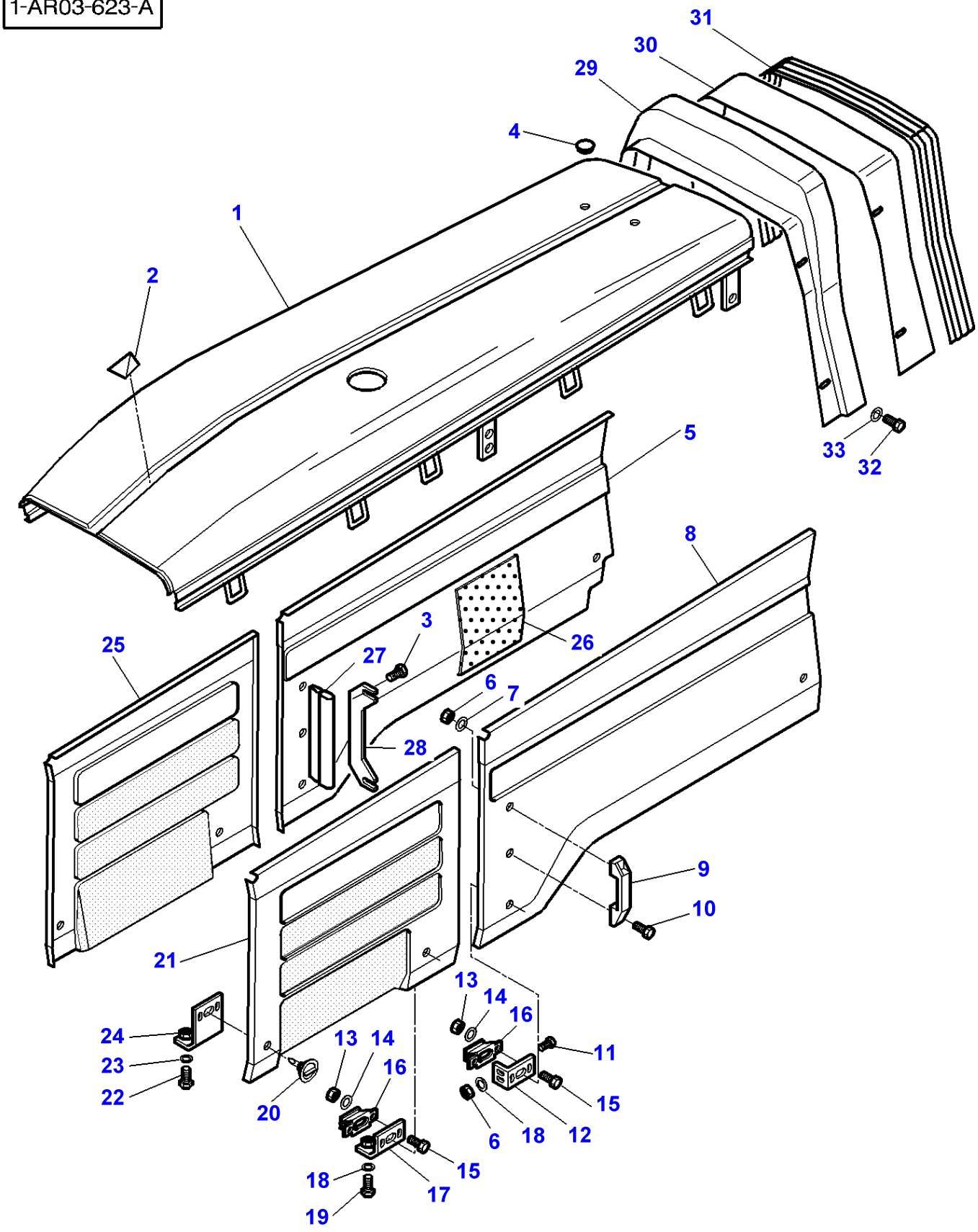
31
30
29
4
1
2
5
33
32
8
25
3
27
26
6
7
28
9
10
21
13
14
16
24
23
22
20
11
15
18
12
17
19

| Item | Part Number | Qty | Description | Comments |
|---|---|---|---|---|
| 1 | 3714239M91 | 1 | Bonnet | |
| 2 | 3714430M1 | 1 | Guide | |
| 3 | 339228X1 | 4 | Screw Metric | M8X12 |
| 4 | 3714113M1 | 2 | Plug | |
| 5 | 3777463M91 | 1 | Panel | Right Hand |
| 6 | 1441500X1 | 8 | Locknut | |
| 7 | 391038X1 | 4 | Washer | |
| 8 | 3713234M91 | 1 | Panel | Left Hand |
| 9 | 3714431M1 | 2 | Handle | |
| 10 | 339560X1 | 4 | Hex. Sock. Screw | M6X16 |
| 11 | 391074X1 | 4 | Hex. Sock. Screw | M6X12 |
| 12 | 3779508M1 | 2 | Strap | |
| 13 | 1443615X1 | 16 | Nut Metric | |
| 14 | 3001856X1 | 16 | Washer Metric | |
| 15 | 1442171X1 | 16 | Screw | M4X10 |
| 16 | 3713226M1 | 8 | Bridle | |
| 17 | 3779489M1 | 2 | Strap | |
| 18 | 390971X1 | 1 | Washer | |
| 19 | 391074X1 | 2 | Hex. Sock. Screw | M6X12 |
| | 339560X1 | 2 | Hex. Sock. Screw | M6X16 |
| 20 | 3778784M1 | 8 | Latch | Replace and repair. Old not interchangeable with new 3713246M1 |
| 21 | 3713239M91 | 1 | Panel | Left Hand |
| 22 | 391074X1 | 2 | Hex. Sock. Screw | M6X12 |
| | 339560X1 | 2 | Hex. Sock. Screw | M6X16 |
| 23 | 390971X1 | 8 | Washer | |
| 24 | 3713225M1 | 2 | Angle | |
| 25 | 3713238M91 | 1 | Panel | Right Hand |
| 26 | 3714429M1 | 1 | Protector | 850X530MM |
| 27 | 3714820M1 | 2 | Staple | Length 300MM |
| 28 | 3777473M1 | 2 | Stop | |
| 29 | 3777447M2 | 1 | Spacer | |
| 30 | 3777460M2 | 1 | Shield | |
| 31 | 3777461M1 | 1 | Seal | Length 1955MM |
| 32 | 339124X1 | 4 | Hex. Sock. Screw | M8X16 |
| 33 | 391039X1 | 4 | Washer Metric | |

1-AR03-624-B

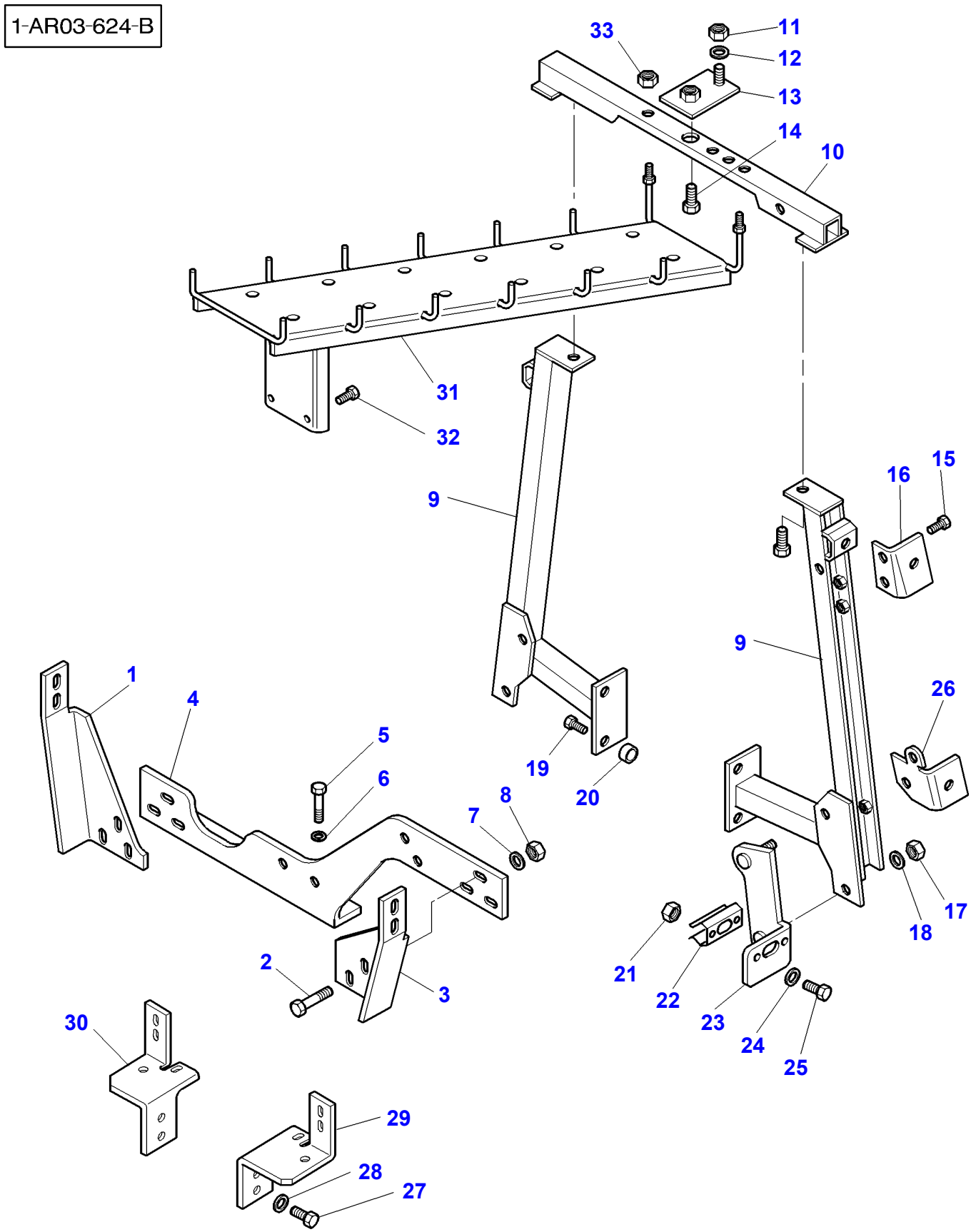
33
11
12
13
14
10
31
32
9
16
15
9
1
4
5
6
8
7
19
20
26
2
3
17
18
21
22
23
24
25
30
29
28
27

| Item | Part Number | Qty | Description | Comments |
|---|---|---|---|---|
| 1 | 3777466M1 | 1 | Support | Right Hand |
| 2 | 339124X1 | 6 | Hex. Sock. Screw | M8X16 |
| 3 | 3777465M1 | 1 | Support | Left Hand |
| 4 | 3777464M2 | 1 | Support | |
| 5 | 339139X1 | 2 | Screw Metric | M12X25 |
| 6 | 390735X1 | 2 | Washer | |
| 7 | 390972X1 | 6 | Washer Metric | |
| 8 | 339169X1 | 6 | Nut | |
| 9 | 3777449M1 | 1 | Support | Right Hand |
| 10 | 3713223M3 | 1 | Transverse | |
| 11 | 339169X1 | 1 | Nut | |
| 12 | 391039X1 | 1 | Washer Metric | |
| 13 | 3777459M1 | 1 | Strap | |
| 14 | 339228X1 | 1 | Screw Metric | M8X12 |
| 15 | 339124X1 | 4 | Hex. Sock. Screw | M8X16 |
| 16 | 3777454M1 | 1 | Strap | Left Hand |
| | 3777455M1 | 1 | Strap | Right Hand |
| 17 | 339169X1 | 4 | Nut | |
| 18 | 390972X1 | 4 | Washer Metric | |
| 19 | 392054X1 | 2 | Screw | M10X22 |
| 20 | 3383637M1 | 2 | Spacer | |
| 21 | 1443615X1 | 4 | Nut Metric | |
| 22 | 3713226M1 | 2 | Bridle | |
| 23 | 3777451M1 | 1 | Strap | Left Hand |
| | 3777452M1 | 1 | Strap | Right Hand |
| 24 | 3001856X1 | 4 | Washer Metric | |
| 25 | 1442171X1 | 4 | Screw | |
| 26 | 3777457M1 | 1 | Strap | Left Hand |
| | 3777458M1 | 1 | Strap | Right Hand |
| 27 | 339081X1 | 4 | Screw Metric | |
| 28 | 390734X1 | 4 | Washer | |
| 29 | 3714310M1 | 1 | Support | Left Hand |
| 30 | 3714311M1 | 1 | Support | Right Hand |
| 31 | 3778553M1 | 1 | Support | |
| 32 | 339124X1 | 2 | Hex. Sock. Screw | M8X16 |
| 33 | 339169X1 | 2 | Nut | |

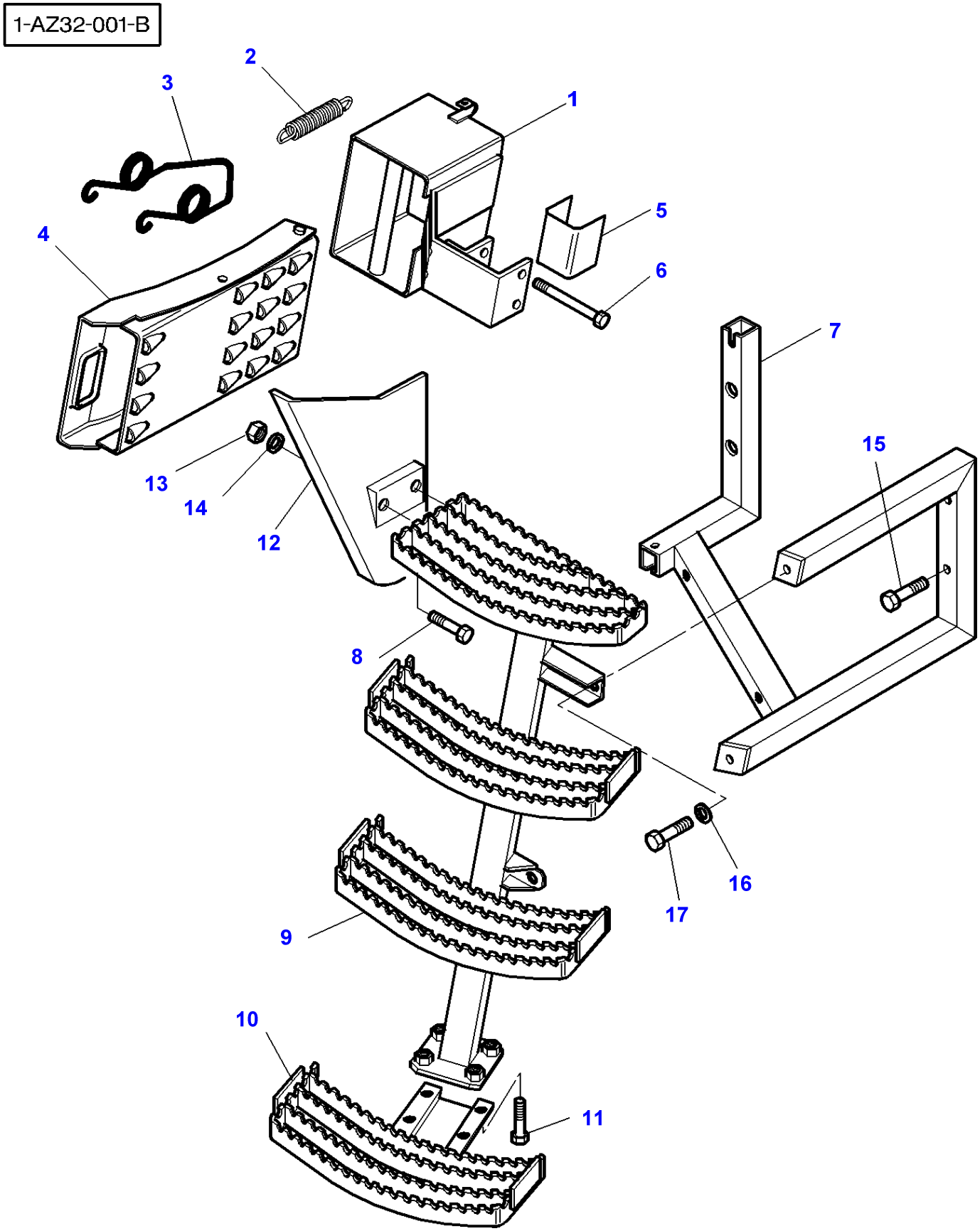
1-AZ32-001-B
1
2
3
4
5
6
7
8
9
10
11
12
13
14
15
16
17

| Item | Part Number | Qty | Description | Comments |
|---|---|---|---|---|
| 1 | 3715111M91 | 1 | Support | |
| 2 | 3616740M2 | 1 | Spring | |
| 3 | 3715112M1 | 1 | Stem | |
| 4 | 3042422M1 | 2 | Chock | |
| 5 | 3619191M1 | 2 | Gasket | Length 42MM |
| 6 | 1440922X1 | 2 | Bolt | M6X60MM |
| 7 | 3780568M1 | 1 | Support | Right Hand |
| 8 | 339132X1 | 1 | Screw | M8x75 |
| | 3015258X1 | 1 | Screw Metric | M8X95 |
| 9 | 3778629M91 | 1 | Step | Right Hand |
| 10 | 3778630M91 | 1 | Stair | Right Hand |
| 11 | 3009491X1 | 4 | Hex. Sock. Screw | M10X20 |
| 12 | 3778669M3 | 1 | Protector | Right Hand<br>Up to Serial or Engine Number H082032 |
| | | 1 | Protector | Right Hand<br>From Serial or Engine Number H082033<br>See Page - Reference Number 100-0035/18 |
| 13 | 339169X1 | 2 | Nut | |
| 14 | 390972X1 | 2 | Washer Metric | |
| 15 | 391889X1 | 4 | Screw | M16X70 |
| 16 | 3019575X1 | 2 | Washer Metric | |
| 17 | 339275X1 | 2 | Hex. Sock. Screw | M16X35 |

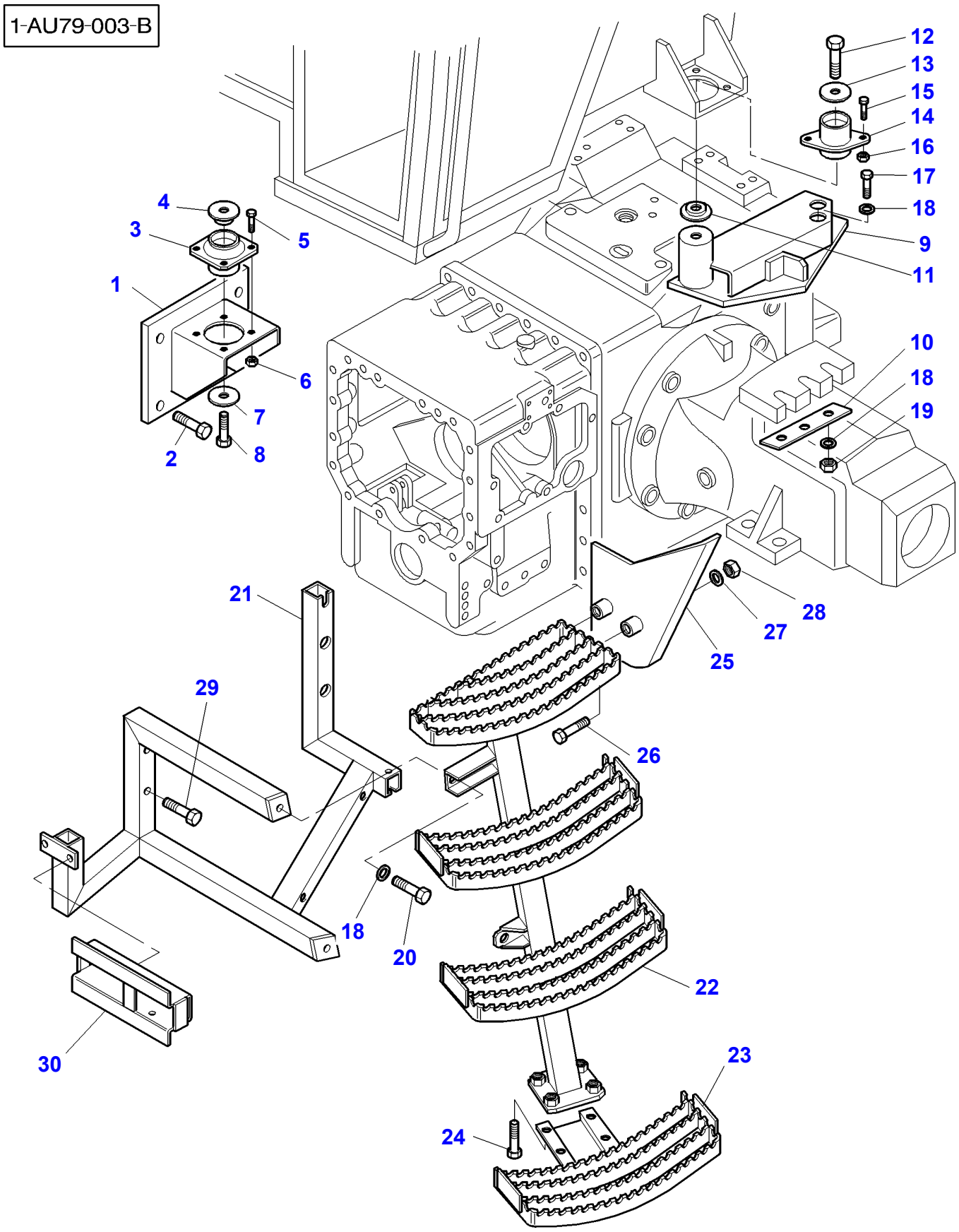
1-AU79-003-B
12
13
15
14
16
17
18
9
11
4
3
5
1
6
7
2
8
10
18
19
21
28
27
25
29
26
18
20
22
30
23
24

| Item | Part Number | Qty | Description | Comments |
|---|---|---|---|---|
| 1 | 3781609M1 | 1 | Support | Left Hand |
| | 3781610M1 | 1 | Support | Right Hand |
| 2 | 390419X1 | 6 | Hex. Sock. Screw | M16X40 |
| | 391334X1 | 2 | Screw | M16X50 |
| 3 | 3712693M1 | 2 | Vibration Mount | |
| 4 | 3388272M1 | 2 | Washer | |
| 5 | 3009492X1 | 8 | Hex. Sock. Screw | M10X25 |
| 6 | 3009693X1 | 8 | Nut Metric | |
| 7 | 3712809M2 | 4 | Spacer | |
| 8 | 339805X1 | 2 | Bolt Metric | M16X100 |
| 9 | 3780311M1 | 1 | Support | Left Hand |
| | 3780312M1 | 1 | Support | Right Hand |
| 10 | 3777417M1 | 2 | Plate | |
| 11 | 3388272M1 | 2 | Washer | |
| 12 | 339805X1 | 2 | Bolt Metric | M16X100 |
| 13 | 3712809M2 | 4 | Spacer | |
| 14 | 3715926M1 | 2 | Buffer | |
| 15 | 3009492X1 | 8 | Hex. Sock. Screw | M10X25 |
| 16 | 3009693X1 | 8 | Nut Metric | |
| 17 | 339805X1 | 4 | Bolt Metric | M16X100 |
| 18 | 3019575X1 | 11 | Washer Metric | |
| 19 | 339034X1 | 4 | Nut | |
| 20 | 339275X1 | 2 | Hex. Sock. Screw | M16X35 |
| 21 | 3780565M1 | 1 | Support | Up to Serial or Engine Number 03/99 |
| | | 1 | Support | From Serial or Engine Number H091015 |
| | | | | See Page - Reference Number 010-0200/1 |
| 22 | 3778229M91 | 1 | Step | |
| 23 | 3778336M91 | 1 | Stair | |
| 24 | 339081X1 | 4 | Screw Metric | M10X20 |
| 25 | 3778395M2 | 1 | Protector | Up to Serial or Engine Number H082032 |
| | | 1 | Protector | From Serial or Engine Number H082033 |
| | | | | See Page - Reference Number 100-0035/18 |
| 26 | 339168X1 | 2 | Screw | M8X50 |
| | | | | Up to Serial or Engine Number G257027 |
| | 339132X1 | 1 | Screw | M8X75 |
| | 390246X1 | 3 | Bolt | M8X70 |
| | | | | From Serial or Engine Number G257028 |
| 27 | 390972X1 | 2 | Washer Metric | |
| 28 | 339169X1 | 4 | Nut | Up to Serial or Engine Number G257027 |
| | 394367X1 | 4 | Locknut | From Serial or Engine Number G257028 |
| 29 | 391889X1 | 4 | Screw | M16X70 |
| 30 | 3780567M1 | 1 | Support | |

1-AU07-607-B

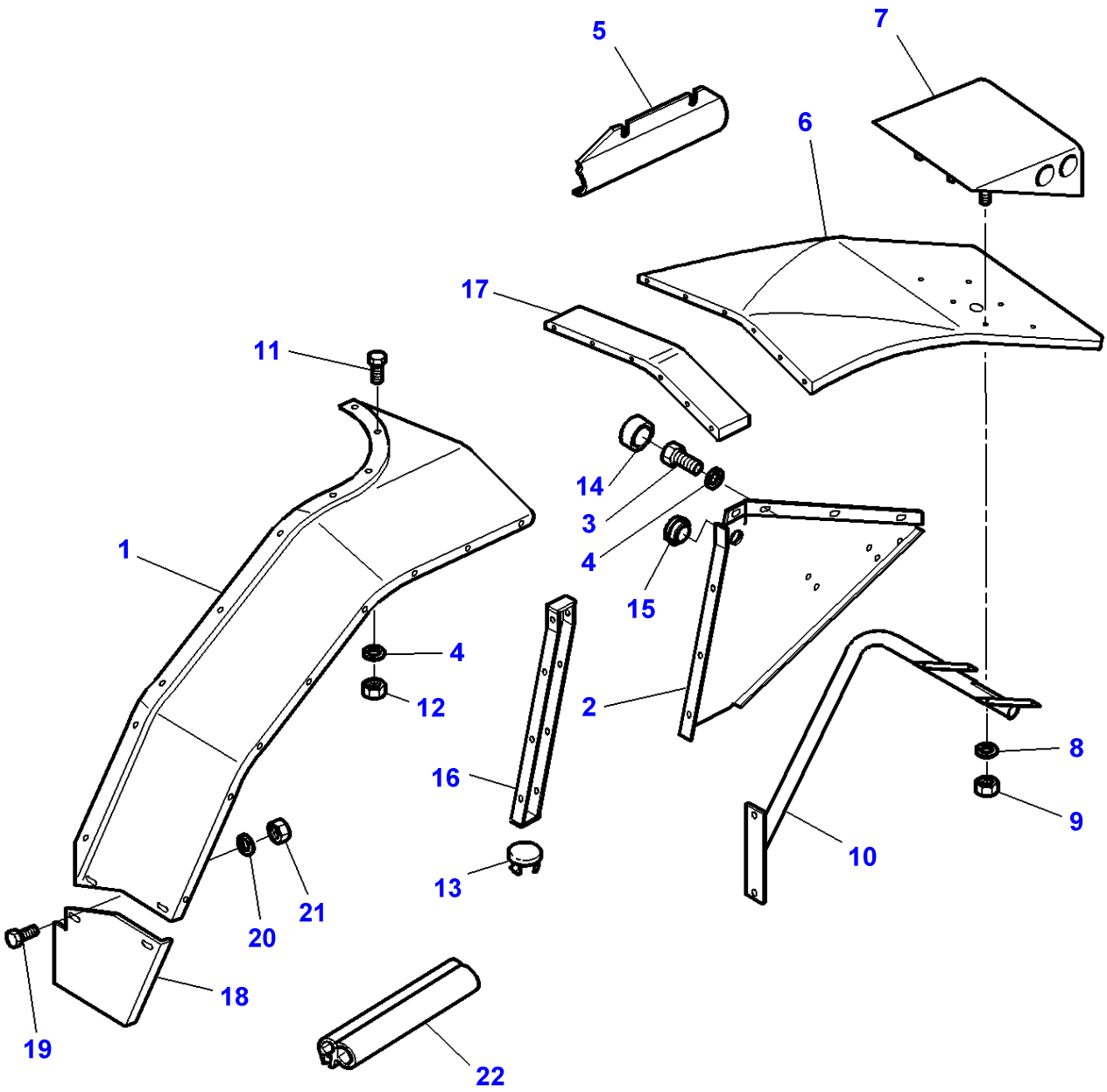

| Item | Part Number | Qty | Description | Comments |
|---|---|---|---|---|
| 1 | 3714631M2 | 1 | Fender | Right Hand |
| | 3714630M2 | 1 | Fender | Left Hand |
| 2 | 3780624M1 | 1 | Skirt | Left Hand |
| | 3780625M1 | 1 | Skirt | Right Hand |
| 3 | 339123X1 | X | Hex. Sock. Screw | M8 X 20 |
| 4 | 385361X1 | X | Washer | Diameter 9X17X3,2MM |
| | 391039X1 | X | Washer Metric | Diameter 9X24X2,18MM |
| 5 | 3714096M1 | 1 | Protector | Right Hand |
| | 3714097M1 | 1 | Protector | Left Hand |
| 6 | 3712963M1 | 1 | Extension | Right Hand |
| | 3712964M1 | 1 | Extension | Left Hand |
| 7 | 3712967M1 | 1 | Case Assy | Right Hand |
| | 3712968M2 | 1 | Case Assy | Left Hand |
| 8 | 391038X1 | 12 | Washer | Diameter 6MM |
| 9 | 339030X1 | 12 | Nut Metric | M6 |
| 10 | 3714327M2 | 1 | Cowl | Right Hand |
| | 3714326M2 | 1 | Cowl | Left Hand |
| 11 | 339761X1 | X | Hex. Sock. Screw | M8X25 |
| 12 | 339169X1 | X | Nut | M8 |
| | 394367X1 | X | Locknut | [B] |
| | | | | M8 |
| 13 | 3778814M1 | 8 | Plug | [A] |
| | | | | Diameter 11,5MM |
| | 3714113M1 | 5 | Plug | [A] |
| | | | | Diameter 8,5 MM |
| 14 | 3616277M1 | 1 | Helmet | |
| 15 | 3777000M1 | 2 | Grommet | |
| 16 | 3778471M1 | 1 | Spacer | Left Hand |
| | 3778472M1 | 1 | Spacer | Right Hand |
| 17 | 3778473M1 | 2 | Spacer | |
| 18 | 3781697M1 | 1 | Protector | Left Hand |
| | | | | From Serial or Engine Number H082033 |
| | 3781696M1 | 1 | Protector | Right Hand |
| | | | | From Serial or Engine Number H082033 |
| 19 | 385368X1 | 4 | Bolt Metric | |
| 20 | 390972X1 | 2 | Washer Metric | |
| 21 | 394367X1 | 2 | Locknut | |
| 22 | 3781707M1 | 1 | Gasket | Length 130MM |

**FOOTNOTE [A]** BLACK
**FOOTNOTE [B]** CHECK NUT

1-AR05-625-A

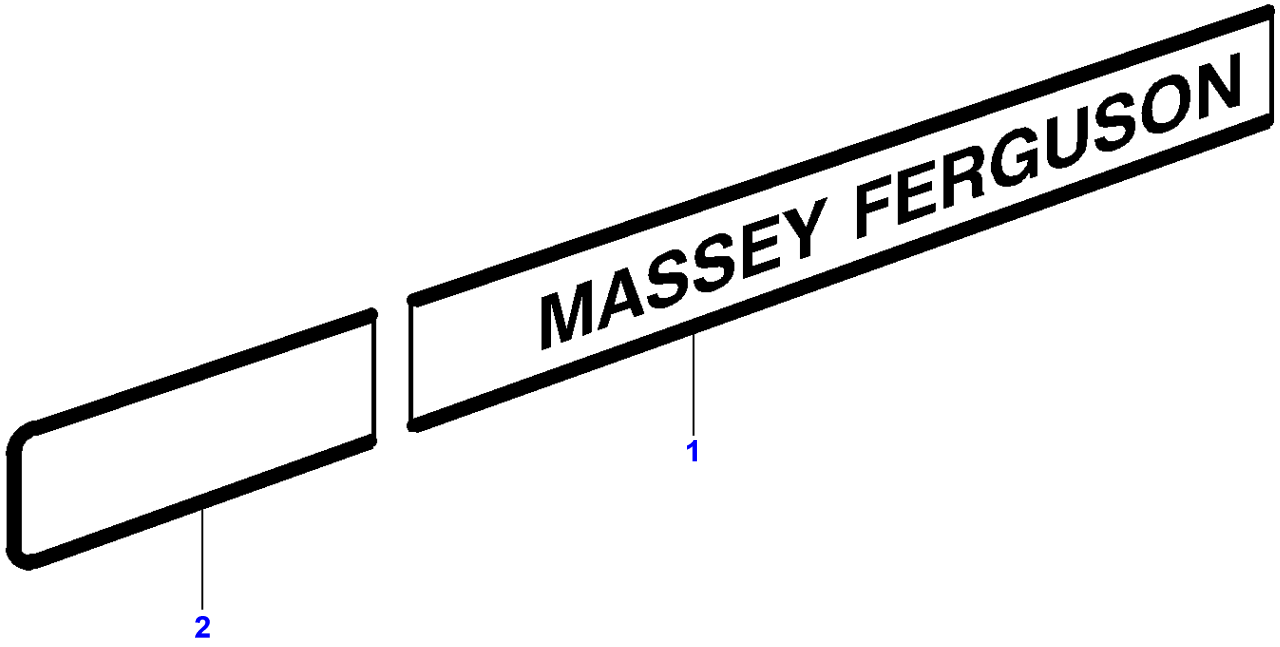


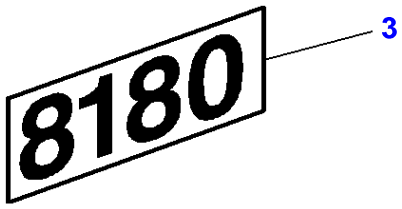


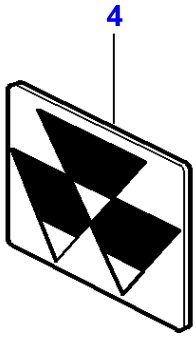

| Item | Part Number | Qty | Description | Comments |
|---|---|---|---|---|
| 1 | 3713755M1 | 1 | Decal | Right Hand |
| | 3713756M1 | 1 | Decal | Left Hand |
| 2 | 3713757M1 | 2 | Decal | |
| 3 | 3780297M1 | 2 | Decal | |
| 4 | 3618969M91 | 1 | Emblem | |

1-AR12-614-A

1

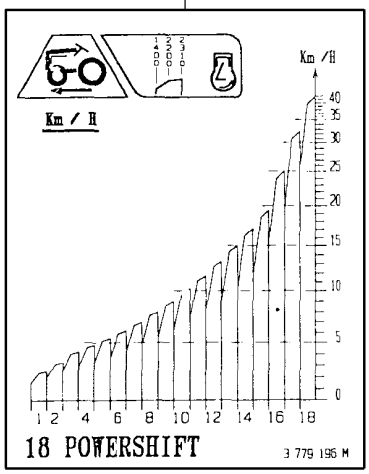


2

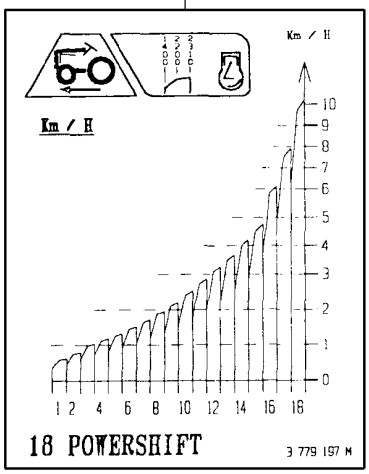


3

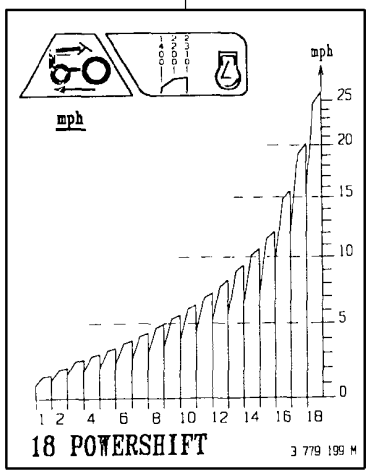


4

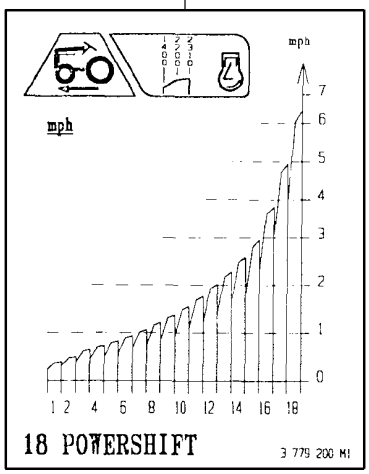


5

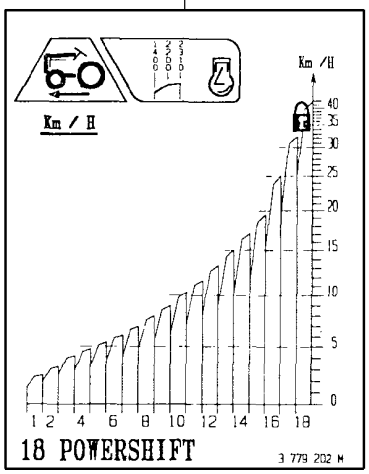


6

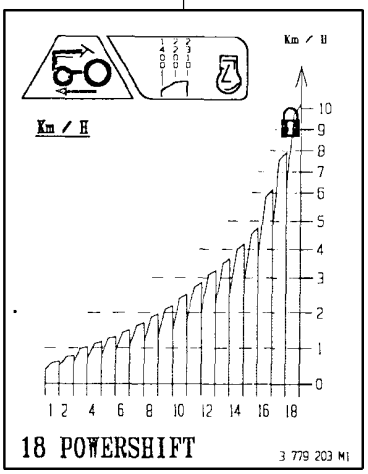

| Item | Part Number | Qty | Description | Comments |
|---|---|---|---|---|
| 1 | 3779196M1 | 1 | Decal | 40 KM/H |
| 2 | 3779197M1 | 1 | Decal | [A]<br>40 KM/H |
| 3 | 3779199M1 | 1 | Decal | 40 MP/H |
| 4 | 3779200M1 | 1 | Decal | [A]<br>40 MP/H |
| 5 | 3779202M1 | 1 | Decal | 30 KM/H |
| 6 | 3779203M1 | 1 | Decal | [A]<br>30 KM/H |

**FOOTNOTE [A]** WITH CREEPER GEAR

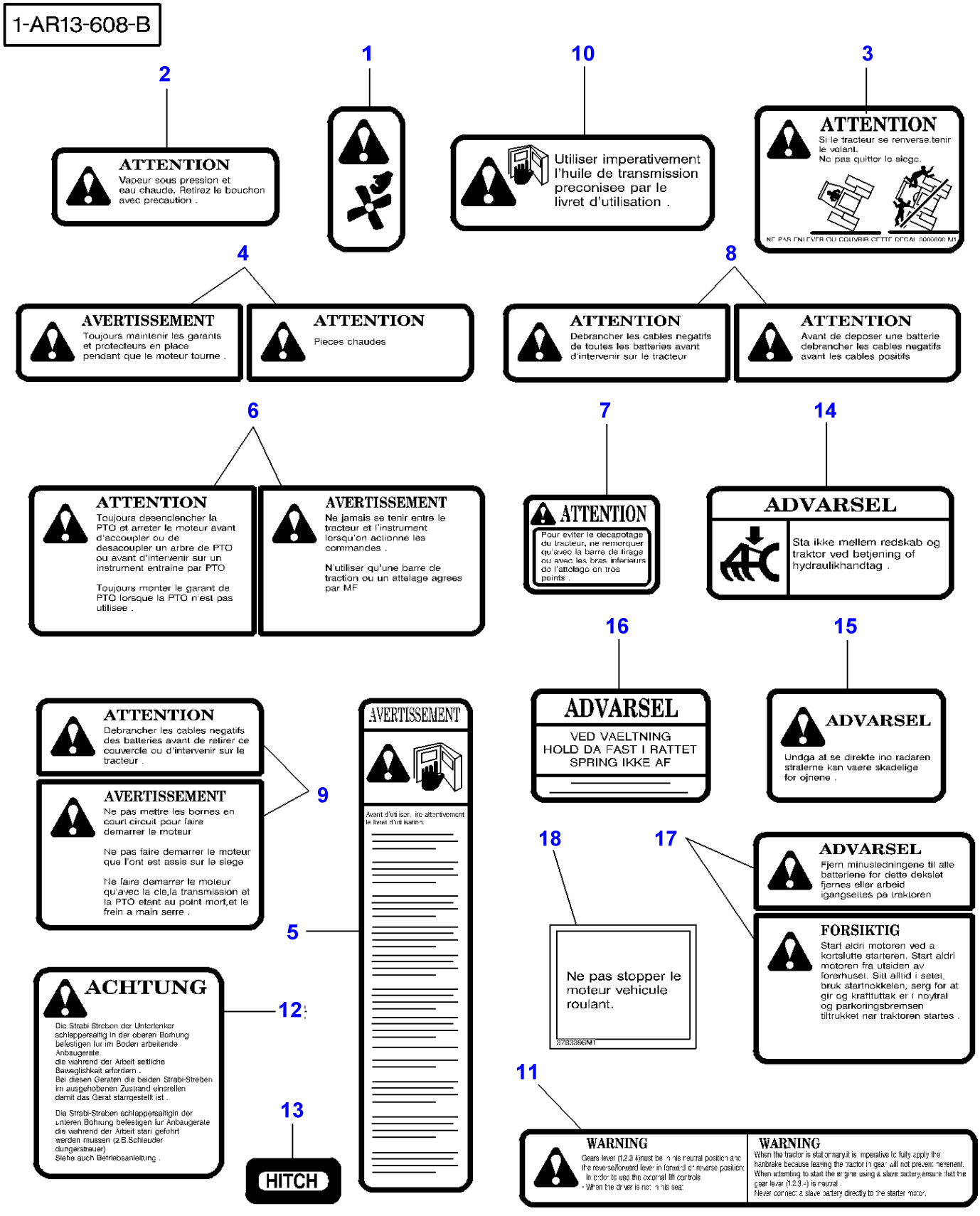
1-AR13-608-B
2
ATTENTION
Vapeur sous pression et eau chaude. Retirez le bouchon avec precaution .
1
10
Utiliser imperativement l'huile de transmission preconisee par le livret d'utilisation .
3
ATTENTION
Si le tracteur se renverse,tenir le volant.
Ne pas quitter le siege.
4
AVERTISSEMENT
Toujours maintenir les garants et protecteurs en place pendant que le moteur tourne .
ATTENTION
Pieces chaudes
8
ATTENTION
Debrancher les cables negatifs de toutes les batteries avant d'intervenir sur le tracteur
ATTENTION
Avant de deposer une batterie debrancher les cables negatifs avant les cables positifs
6
ATTENTION
Toujours desenclencher la PTO et arreter le moteur avant d'accoupler ou de desaccoupler un arbre de PTO ou avant d'intervenir sur un instrument entraine par PTO
Toujours monter le garant de PTO lorsque la PTO n'est pas utilisee .
AVERTISSEMENT
Ne jamais se tenir entre le tracteur et l'instrument lorsqu'on actionne les commandes .
N'utiliser qu'une barre de traction ou un attelage agrees par MF
7
ATTENTION
Pour eviter le decapotage du tracteur, ne remorquer qu'avec la barre de tirage ou avec les bras inferieurs de l'attelage en trois points .
14
ADVARSEL
Sta ikke mellem redskab og traktor ved betjening of hydraulikhandtag .
16
ADVARSEL
VED VAELTNING
HOLD DA FAST I RATTET
SPRING IKKE AF
15
ADVARSEL
Undga at se direkte ino radaren stralerne kan vaere skadelige for ojnene .
ATTENTION
Debrancher les cables negatifs des batteries avant de retirer ce couvercle ou d'intervenir sur le tracteur .
AVERTISSEMENT
Ne pas mettre les bornes en court circuit pour faire demarrer le moteur
Ne pas faire demarrer le moteur que l'ont est assis sur le siege
Ne faire demarrer le moteur qu'avec la cle,la transmission et la PTO etant au point mort,et le frein a main serre .
9
AVERTISSEMENT
Avant d'utilisor, iro attentivement le livret d'utilisation.
5
18
Ne pas stopper le moteur vehicule roulant.
3783396M1
17
ADVARSEL
Fjern minusledningene til alle batteriene for dette dekslet fjernes eller arbeid igangsettes pa traktoren
FORSIKTIG
Start aldri motoren ved a kortslutte starteren. Start aldri motoren fra utsiden av forerhuset. Sitt alltid i setet, bruk startnokkelen, serg for at gir og krafttuttak er i noytral og parkoringsbremsen tiltrukket nar traktoren startes .
ACHTUNG
12
Die Strabi Streben der Unterlenker schleppersaitig in der oberen Bohrung befestigen fur im Boden arbeitende Anbaugerate.
die wahrend der Arbeit seitliche Beweglishkeit erfordern .
Bei diesen Geraten die beiden Strabi-Streben im ausgehobenen Zustand einsrellen damit das Gerat starrgestellt ist .
Die Strabi-Streben schleppersaitigin der unteren Bohrung befestigen fur Anbaugerate die wahrend der Arbeit starr gefohrt werden mussen (z.B.Schleuder dungerstreuer)
Siehe auch Betriebsanleitung .
13
HITCH
11
WARNING
Gears lever (1,2,3 4)must be in its neutral position and the reverse/forward lever in forward or reverse position.
In order to use the external lift controls
- When the driver is not in his seat.
WARNING
When the tractor is stationary,it is imperative to fully apply the handbrake because leaving the tractor in gear will not prevent movement.
When attempting to start the engine using a slave battery,ensure that the gear lever (1,2,3,-) is neutral .
Never connect a slave battery directly to the starter motor.

| Item | Part Number | Qty | Description | Comments |
|---|---|---|---|---|
| 1 | 3697199M1 | 1 | Decal | |
| | 3715586M1 | 1 | Decal | [C] |
| | 3779670M1 | 1 | Decal | [D] |
| 2 | 3596029M1 | 1 | Decal | For France only or any text in French only |
| | 3595685M1 | 1 | Decal | For UK only or any text in English only<br>For Sweden |
| | 3597432M1 | 1 | Decal | For Italy only or any text in Italian only |
| | 3597433M1 | 1 | Decal | [A] |
| | 3715063M1 | 1 | Decal | [B] |
| | 3715583M1 | 1 | Decal | [C] |
| | 3779667M1 | 1 | Decal | [D] |
| 3 | 3580313M1 | 1 | Decal | For France only or any text in French only |
| | 3580315M1 | 1 | Decal | For UK only or any text in English only |
| | 3618260M1 | 1 | Decal | For Sweden |
| | 3581533M2 | 1 | Decal | For Italy only or any text in Italian only |
| | 3581532M1 | 1 | Decal | [A] |
| | 3715589M1 | 1 | Decal | [C] |
| | 3779675M1 | 1 | Decal | [D] |
| 4 | 3596037M1 | 1 | Decal | For France only or any text in French only |
| | 3595678M1 | 1 | Decal | For UK only or any text in English only<br>For Sweden |
| | 3597428M1 | 1 | Decal | For Germany only or any text in German only |
| | 3597429M1 | 1 | Decal | For Italy only or any text in Italian only |
| | 3597430M1 | 1 | Decal | [A] |
| | 3715064M1 | 1 | Decal | [B] |
| | 3715585M1 | 1 | Decal | [C] |
| | 3779669M1 | 1 | Decal | [D] |
| 5 | 3780717M1 | 1 | Decal | For France only or any text in French only |
| | 3780718M1 | 1 | Decal | For UK only or any text in English only |
| | 3780746M1 | 1 | Decal | For Germany only or any text in German only |
| | 3618261M1 | 1 | Decal | For Sweden |
| | 3780747M1 | 1 | Decal | For Italy only or any text in Italian only |
| | 3780742M1 | 1 | Decal | [A] |
| | 3780745M1 | 1 | Decal | [B] |
| | 3780744M1 | 1 | Decal | [C] |
| | 3781230M1 | 1 | Decal | [D] |
| 6 | 3581564M1 | 1 | Decal | For France only or any text in French only |
| | 3581563M1 | 1 | Decal | For UK only or any text in English only |
| | 3618264M1 | 1 | Decal | For Sweden |
| | 3581566M1 | 1 | Decal | For Italy only or any text in Italian only |
| | 3581568M1 | 1 | Decal | [A] |
| | 3715012M1 | 1 | Decal | [B] |
| | 3715587M1 | 1 | Decal | [C] |
| | 3779671M1 | 1 | Decal | [D] |
| 7 | 539613M1 | 1 | Decal | For France only or any text in French only |
| | 2752579M1 | 1 | Decal | For UK only or any text in English only<br>For Sweden |
| | 3581570M2 | 1 | Decal | For Germany only or any text in German only |
| | 3581571M2 | 1 | Decal | For Italy only or any text in Italian only |
| | 3581573M2 | 1 | Decal | [A] |
| | 3715011M1 | 1 | Decal | [B] |
| | 3715588M1 | 1 | Decal | [C] |
| | 3779672M1 | 1 | Decal | [D] |
| 8 | 3596045M1 | 1 | Decal | For France only or any text in French only |
| | 3595679M1 | 1 | Decal | For UK only or any text in English only |
| | 3597446M1 | 1 | Decal | For Germany only or any text in German only |
| | 3618262M1 | 1 | Decal | For Sweden |
| | 3597447M1 | 1 | Decal | For Italy only or any text in Italian only |
| | 3597448M1 | 1 | Decal | [A] |
| | 3715065M1 | 1 | Decal | [B] |
| | 3715584M1 | 1 | Decal | [C] |
| | 3779668M1 | 1 | Decal | [D] |
| 9 | 3596467M1 | 1 | Decal | For France only or any text in French only |
| | 3699634M1 | 1 | Decal | For UK only or any text in English only<br>For Sweden |
| | 3597449M1 | 1 | Decal | For Germany only or any text in German only |
| | 3597450M1 | 1 | Decal | For Italy only or any text in Italian only |
| | 3597451M1 | 1 | Decal | [A] |
| | 3715068M1 | 1 | Decal | [B] |
| | 3715069M1 | 1 | Decal | [B] |
| | 3779676M1 | 1 | Decal | [D] |

| Item | Part Number | Qty | Description | Comments |
|---|---|---|---|---|
| 10 | 3713698M1 | 1 | Decal | For France only or any text in French only |
| 10 | 3713699M1 | 1 | Decal | For UK only or any text in English only<br>For Sweden |
| 10 | 3713700M1 | 1 | Decal | For Germany only or any text in German only |
| 10 | 3713701M1 | 1 | Decal | For Italy only or any text in Italian only |
| 10 | 3713702M1 | 1 | Decal | [A] |
| 10 | 3715591M1 | 1 | Decal | [C] |
| 10 | 3779678M1 | 1 | Decal | [D] |
| 11 | 3713705M3 | 1 | Decal | For UK only or any text in English only |
| 11 | 3780743M1 | 1 | Decal | For Sweden |
| 12 | 3583497M1 | 1 | Decal | For Germany only or any text in German only |
| 13 | 3618263M1 | 1 | Decal | For Sweden |
| 14 | 3715072M1 | 1 | Decal | [B] |
| 15 | 3714996M1 | 1 | Decal | [B] |
| 16 | 3715067M1 | 1 | Decal | [B] |
| 17 | 3715590M1 | 1 | Decal | [C] |
| 18 | 3783395M1 | 1 | Decal | For France only or any text in French only |
| 18 | 3783396M1 | 1 | Decal | For UK only or any text in English only |

**FOOTNOTE [A]** SPANISH TEXT
**FOOTNOTE [B]** DENMARK
**FOOTNOTE [C]** NORWAY ONLY
**FOOTNOTE [D]** FOR RUSSIAN

| Page Title | Page Number |
|---|---|
| Tractor Cab - Frame | 110-0005 |
| Tractor Cab - Doors | 110-0010 |
| Tractor Cab - Windows | 110-0015 |
| Tractor Cab - Windows - Side Window Mechanism | 110-0020 |
| Tractor Cab - Windows - Rear Window Mechanism | 110-0025 |
| Tractor Cab - Roof | 110-0030 |
| Tractor Cab - Heating Hatchway | 110-0035 |
| Tractor Cab - Air Hatchway | 110-0040 |
| Tractor Cab - Cladding - Upper Compoments | 110-0045 |
| Tractor Cab - Cladding - Lower Component | 110-0050 |
| Tractor Cab - Cladding - Instrument Panel | 110-0055 |
| Tractor Cab - Cladding | 110-0060 |
| Tractor Cab - Cab Insulation | 110-0065 |
| Tractor Cab - Cab Insulation | 110-0070 |
| Air Conditioner - Hose | 110-0075 |
| Tractor Cab - Heater Hoses | 110-0080 |
| Air Conditioner | 110-0085 |
| Air Conditioner | 110-0090 |
| Tractor Cab - Heater | 110-0095 |
| Tractor Cab - Windscreen Washer | 110-0100 |
| Tractor Cab - Windscreen Wiper | 110-0105 |
| Tractor Cab - Rear Window Wiper | 110-0110 |
| Tractor Cab - Sun shield | 110-0115 |
| Tractor Cab - Radio Installation | 110-0120 |
| Tractor Cab - Watch | 110-0125 |
| Electrical Wiring - Tractor Cab | 110-0130 |
| Tractor Cab - External Mirrors | 110-0135 |
| Tractor Cab - Internal Mirrors | 110-0140 |
| Main Seat - Air Pressure Seat | 110-0145 |
| Main Seat - Air Pressure Seat | 110-0150 |
| Seat - Grammer | 110-0155 |
| Seat - Grammer | 110-0160 |
| Seat - Grammer - With Automatic Adjustment | 110-0165 |
| Secondary Seat | 110-0170 |

1-AU03-602-A

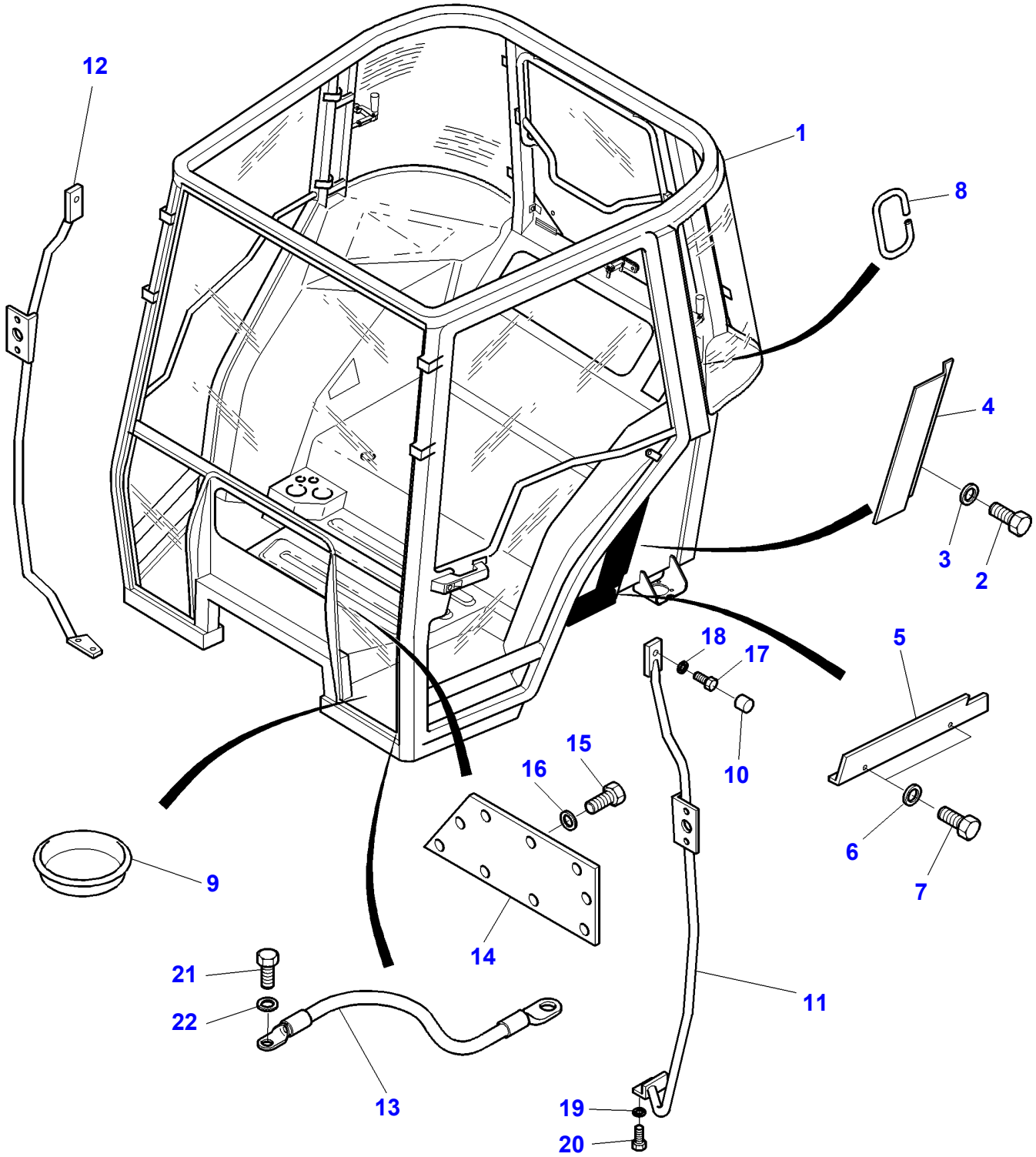

| Item | Part Number | Qty | Description | Comments |
|---|---|---|---|---|
| 1 | 3777181M92 | 1 | Cab | |
| 2 | 339123X1 | 4 | Hex. Sock. Screw | M8X20 |
| 3 | 390972X1 | 4 | Washer Metric | Diameter 9MM |
| 4 | 3713290M1 | 1 | Cowl | Right Hand Top |
| | 3713289M1 | 1 | Cowl | Left Hand Top |
| 5 | 3713292M1 | 1 | Cowl | Right Hand Bottom |
| | 3713291M1 | 1 | Cowl | Left Hand Bottom |
| 6 | 390971X1 | 4 | Washer | M6 |
| 7 | 391074X1 | 4 | Hex. Sock. Screw | M6X12 |
| 8 | 3714681M1 | 1 | Profile | Length 150MM |
| 9 | 3902363M1 | 1 | Plug | Diameter 20MM |
| 10 | 3616277M1 | 2 | Helmet | |
| 11 | 3780048M91 | 1 | Guideway | Right Hand |
| 12 | 3780049M91 | 1 | Guideway | Left Hand |
| 13 | 3780338M1 | 1 | Earth Strap | |
| 14 | 3778052M1 | 1 | Inspection Cover | |
| 15 | 3903188M1 | 9 | Screw | CBLX M6X25 |
| 16 | 390971X1 | 9 | Washer | |
| 17 | 339228X1 | 2 | Screw Metric | M8X12 |
| 18 | 390972X1 | 2 | Washer Metric | |
| 19 | 390972X1 | 2 | Washer Metric | |
| 20 | 339124X1 | 4 | Hex. Sock. Screw | M8X16 |
| 21 | 339761X1 | 1 | Hex. Sock. Screw | M8X25 |
| 22 | 385362X1 | 1 | Washer | Diameter 10-20X3MM |
| | 339374X1 | 1 | Lock Washer | Diameter 8MM |

1-AU05-602-B

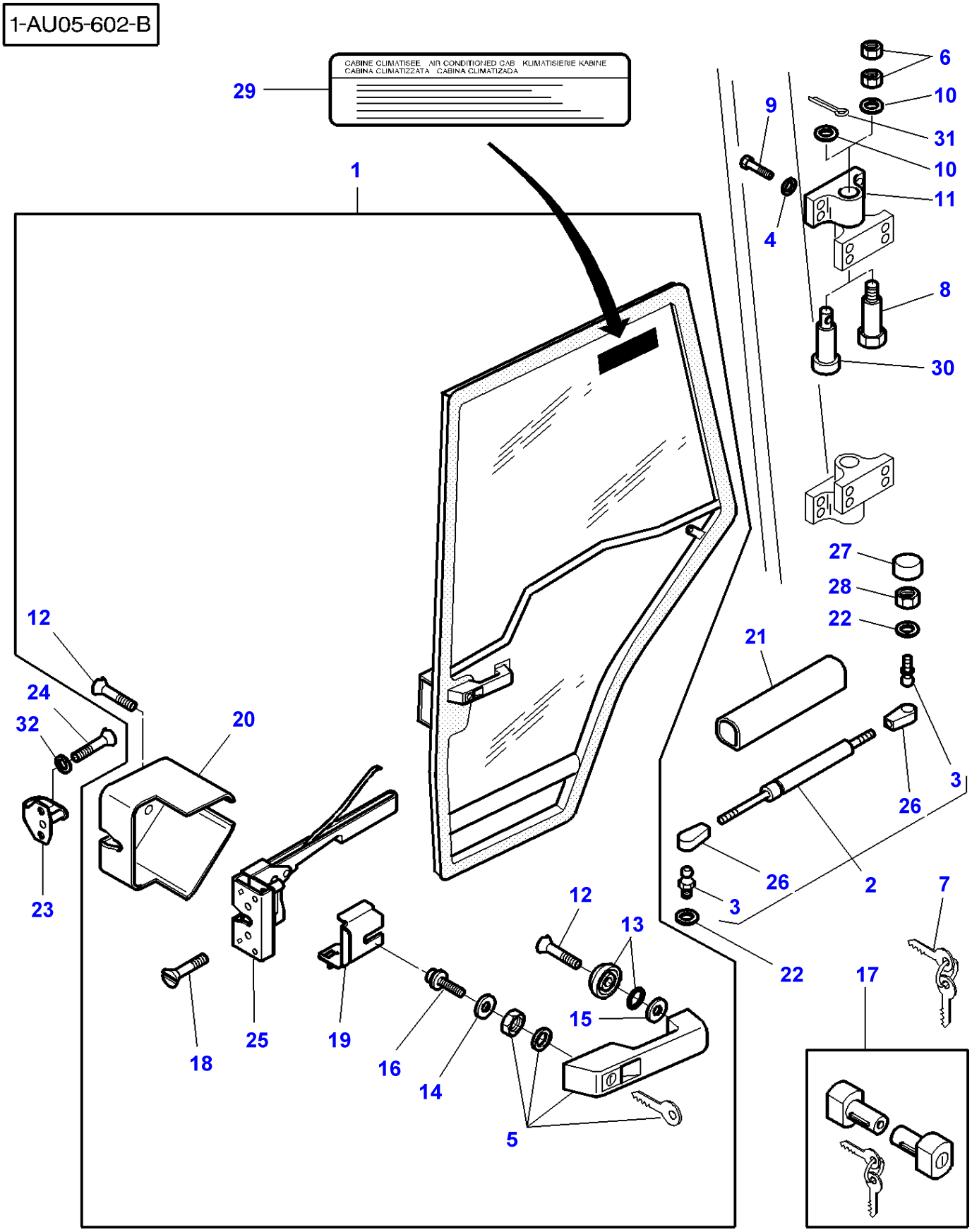
CABINE CLIMATISEE AIR CONDITIONED CAB KLIMATISIERIE KABINE
CABINA CLIMATIZZATA CABINA CLIMATIZADA
29
1
6
10
31
10
11
9
4
8
30
27
28
22
21
3
26
2
26
3
22
7
17
12
24
32
20
23
12
13
15
18
25
19
16
14
5

| Item | Part Number | Qty | Description | Comments |
|---|---|---|---|---|
| 1 | 3902120M91 | 1 | Gate | Right Hand |
| | 3902119M91 | 1 | Gate | Left Hand |
| 2 | 3902121M3 | 2 | Ram | |
| 3 | 3902773M1 | 2 | Toggle | (2) |
| 4 | 385361X1 | 16 | Washer | |
| 5 | 3902356M91 | 2 | Handle | [A]<br>(1)<br>No610 |
| 6 | 339169X1 | 8 | Nut | Up to Serial or Engine Number |
| 7 | **3902584M91** | 1 | Kit, Spanner | |
| 8 | 3902117M1 | 4 | Clevis Pin | Up to Serial or Engine Number |
| 9 | 3902414M1 | 16 | Screw | M8X20 |
| 10 | 3902118M1 | 4 | Washer | Up to Serial or Engine Number<br>Diameter M8-20 |
| | 3903187M1 | 4 | Washer | From Serial or Engine Number<br>Diameter 22X12X1,2 |
| 11 | 3902116M1 | 4 | Hinge | |
| 12 | 3902411M1 | 2 | Screw | (1)<br>M6X16 |
| 13 | 3902145M1 | 2 | Skate | (1) |
| 14 | 3902366M1 | 2 | Washer | (1)<br>28X42X2 |
| 15 | 3902367M1 | 2 | Washer | (1)<br>5X18X1 |
| 16 | 3902368M1 | 2 | Screw Special | (1) |
| 17 | 3902370M91 | 1 | Parts Pack | No 610 |
| 18 | 3902412M1 | 4 | Screw | (1)<br>M6X25 |
| 19 | 3902369M1 | 1 | Rod Link | (1)<br>Left Hand |
| | 3902371M1 | 1 | Rod Link | (1)<br>Right Hand |
| 20 | 3804660M1 | 1 | Cover | (1)<br>Right Hand |
| | 3804661M1 | 1 | Cover | (1)<br>Left Hand |
| 21 | 3902415M1 | 2 | Protector | |
| 22 | 391025X1 | 4 | Lock Washer | |
| 23 | 3902372M1 | 2 | Latch | |
| 24 | 3010775X1 | 4 | Screw | CZX M6X25 |
| 25 | 3804663M1 | 1 | Latch | (1)<br>Left Hand |
| | 3804662M1 | 1 | Latch | (1)<br>Right Hand |
| 26 | | 2 | Toggle | (2)<br>Not serviced,order REFNo2 |
| 27 | 3616277M1 | 2 | Helmet | |
| 28 | 339169X1 | 2 | Nut | |
| 29 | 3619471M1 | 1 | Decal | |
| 30 | 3903186M1 | 4 | Clevis Pin | From Serial or Engine Number |
| 31 | 1442963X1 | 4 | Split Pin | From Serial or Engine Number<br>Diameter 2,5X32 |
| 32 | 391038X1 | 4 | Washer | |

**FOOTNOTE [A]** NUMBER STAMPED ON THE LOCK

1-AU06-600-C

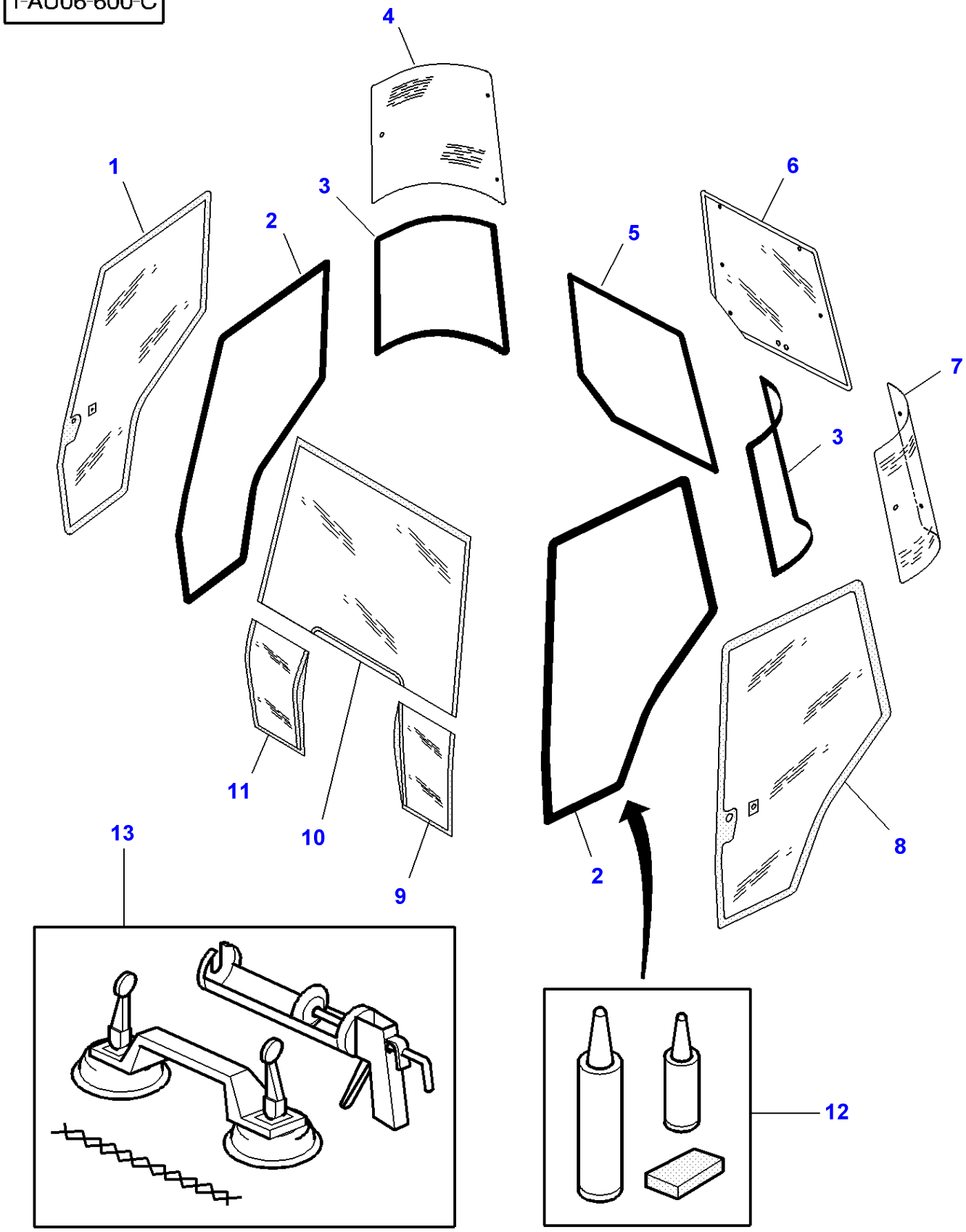

| Item | Part Number | Qty | Description | Comments |
|---|---|---|---|---|
| 1 | 3902124M1 | 1 | Window | Right Hand |
| 2 | 3902122M1 | 2 | Seal | |
| 3 | 3902133M1 | 2 | Seal | |
| 4 | 3902131M1 | 1 | Window | Right Hand |
| 5 | 3902144M1 | 1 | Seal | |
| 6 | 3715438M1 | 1 | Window | |
| 7 | 3902130M1 | 1 | Window | Left Hand |
| 8 | 3902123M1 | 1 | Window | Left Hand |
| 9 | 3902149M1 | 1 | Window | Left Hand |
| 10 | **3902148M1** | 1 | Windscreen | |
| 11 | 3902150M1 | 1 | Window | Right Hand |
| 12 | 3902373M91 | 1 | Parts Pack | |
| 13 | 3902503M91 | 1 | Parts Pack | |

**FOOTNOTE [A]** WITH WINDSHIELD WIPER SIDE RIGHT
**FOOTNOTE [B]** WITH WINDSHIELD WIPER SIDE LEFT
**FOOTNOTE [C]** WITH HIGH VISIBILITY ROOF

1-AU06-604-B

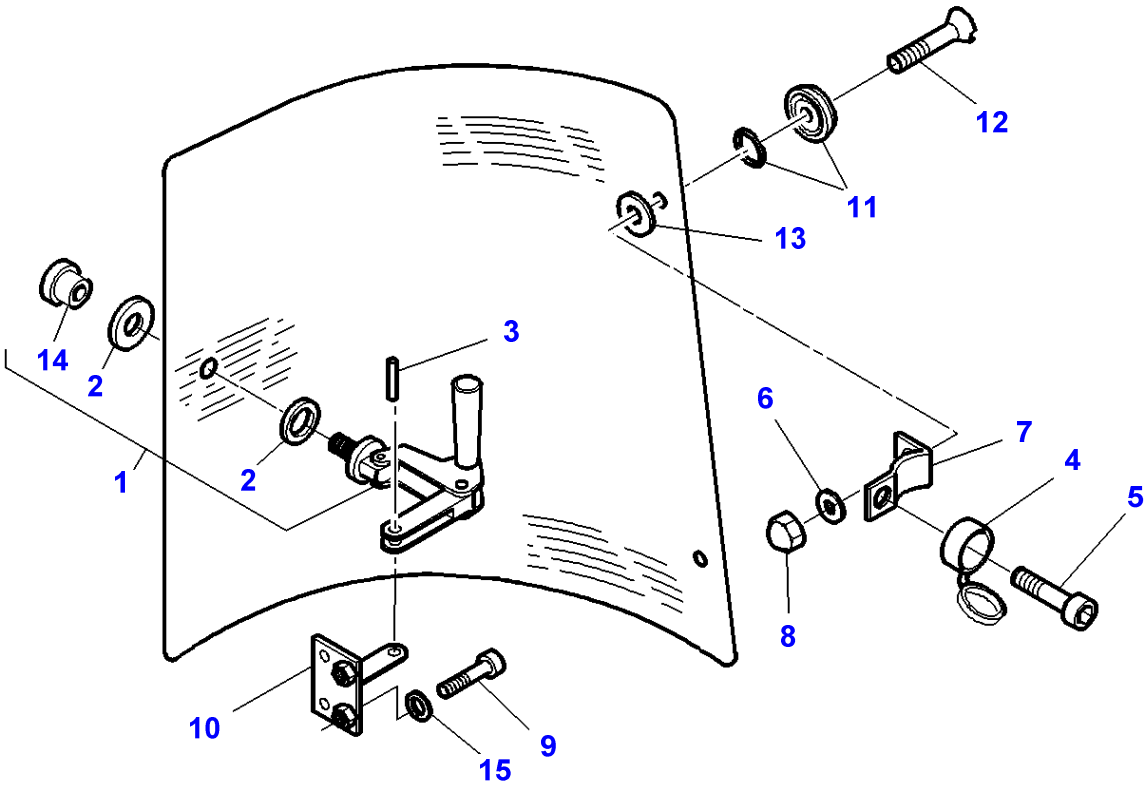

| Item | Part Number | Qty | Description | Comments |
|---|---|---|---|---|
| 1 | 3476132M91 | 1 | Stay | Left Hand |
| | 3476133M91 | 1 | Stay | Right Hand |
| 2 | 3478052M1 | 2 | Washer | (1) |
| 3 | 3473439M1 | 2 | Clevis Pin | (1) |
| 4 | 3902129M1 | 4 | Muff | |
| 5 | 3903188M1 | 4 | Screw | CBLX M6X25 |
| 6 | 390971X1 | 4 | Washer | |
| 7 | 3902128M1 | 4 | Hinge | |
| 8 | 3902455M1 | 4 | Nut | M6 |
| 9 | 3903188M1 | 8 | Screw | CBLX M6X25 |
| 10 | 3902134M1 | 2 | Support | Up to Serial or Engine Number |
| 11 | 3902145M1 | 4 | Skate | |
| 12 | 3903188M1 | 4 | Screw | CBLX M6X25<br>Replace and repair. Old interchangeable with new 3902498M1 |
| 13 | 3902365M1 | 4 | Washer | Diameter 8X30X3 |
| 14 | 3478051M1 | 1 | Nut | (1) |
| 15 | 391289X1 | 8 | Lock Washer | |

1-AU06-605-B

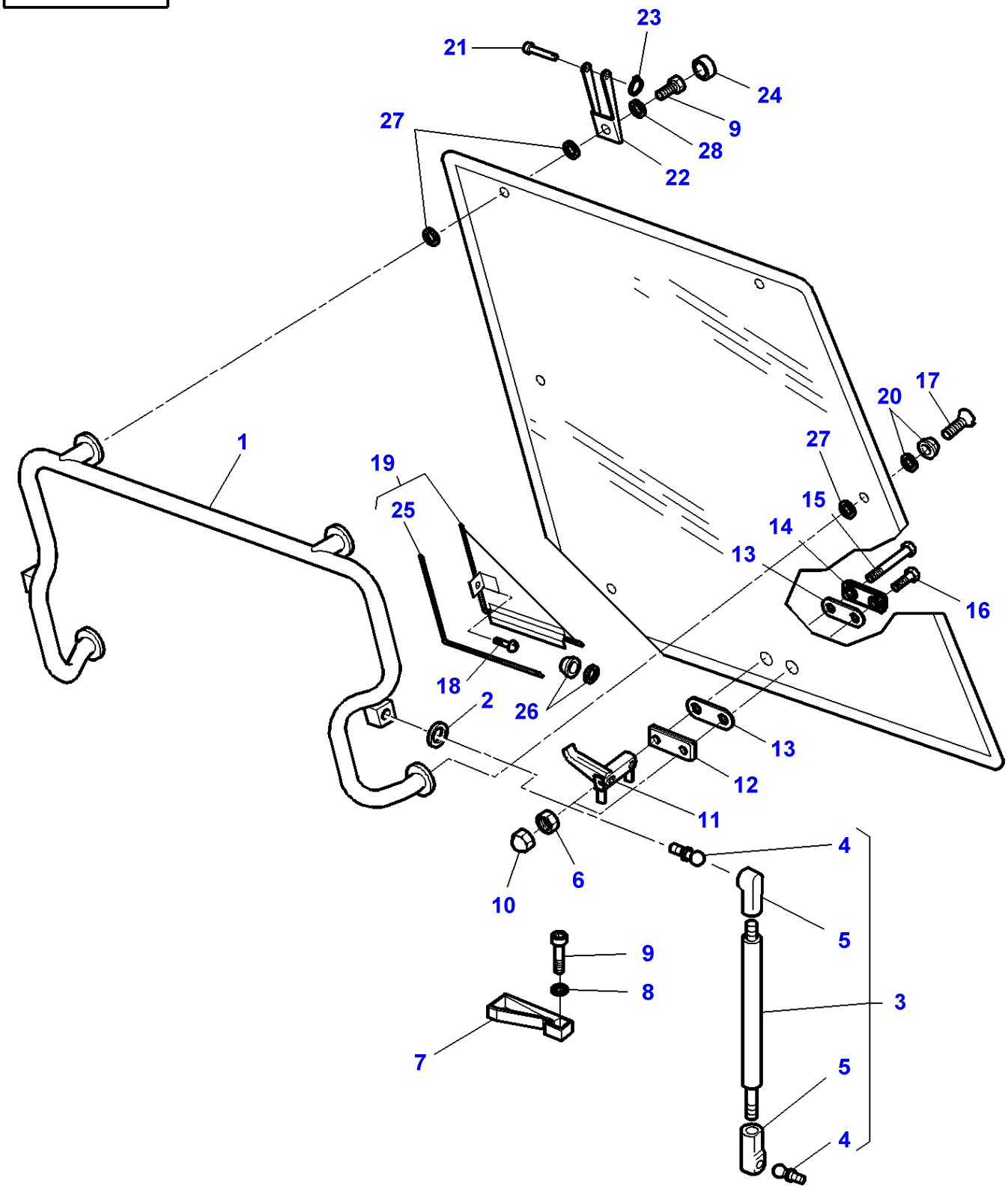
23
21
24
9
27
28
22
17
20
27
1
19
25
15
14
13
16
18
2
26
13
12
11
4
6
10
5
9
8
3
7
5
4

| Item | Part Number | Qty | Description | Comments |
|---|---|---|---|---|
| 1 | 3902135M92 | 1 | Support | |
| 2 | 391025X1 | 4 | Lock Washer | |
| 3 | 3902140M1 | 2 | Ram | |
| 4 | | 2 | Toggle | (3)<br>Not serviced,order REFNo3 |
| 5 | | 2 | Toggle | (3)<br>Not serviced,order REFNo3 |
| 6 | 1441204X1 | 2 | Nut Metric | M10 |
| 7 | 3619610M1 | 1 | Thruster | Repairs and replaces 3902138M1 |
| 8 | 391289X1 | 2 | Lock Washer | |
| 9 | 3903188M1 | 4 | Screw | FX M6X25<br>Replace and repair. Old not interchangeable with new 3902498M1 |
| | 3010775X1 | 4 | Screw | CZX M6X25 |
| 10 | 3619609M1 | 2 | Helmet | M10 |
| 11 | 3619605M1 | 1 | Handle | Repairs and replaces 3902139M1 |
| 12 | 3619604M1 | 1 | Plate | |
| 13 | 3619906M1 | 2 | Gasket | |
| 14 | 3619603M1 | 1 | Plate | |
| 15 | 3619907M1 | 1 | Screw | M10X130 |
| 16 | 3619908M1 | 1 | Screw | M10X35 |
| 17 | 3902412M1 | 2 | Screw | M6X25 |
| 18 | 339228X1 | 1 | Screw Metric | M8X12 |
| 19 | 3902386M91 | 1 | Plate | |
| 20 | 3902145M1 | 2 | Skate | |
| 21 | 3902137M1 | 2 | Clevis Pin | |
| 22 | 3902136M2 | 2 | Clevis | |
| 23 | 1440988X1 | 2 | Circlip | |
| 24 | 3902129M1 | 2 | Muff | |
| 25 | 3902417M1 | 1 | Gasket | (19) |
| 26 | 3619241M1 | 1 | Button | Replace and repair. Old interchangeable with new 3902418M1 |
| 27 | 3902365M1 | 6 | Washer | Diameter 8X30X3 |
| 28 | 385361X1 | 2 | Washer | |

1-AU02-602-A

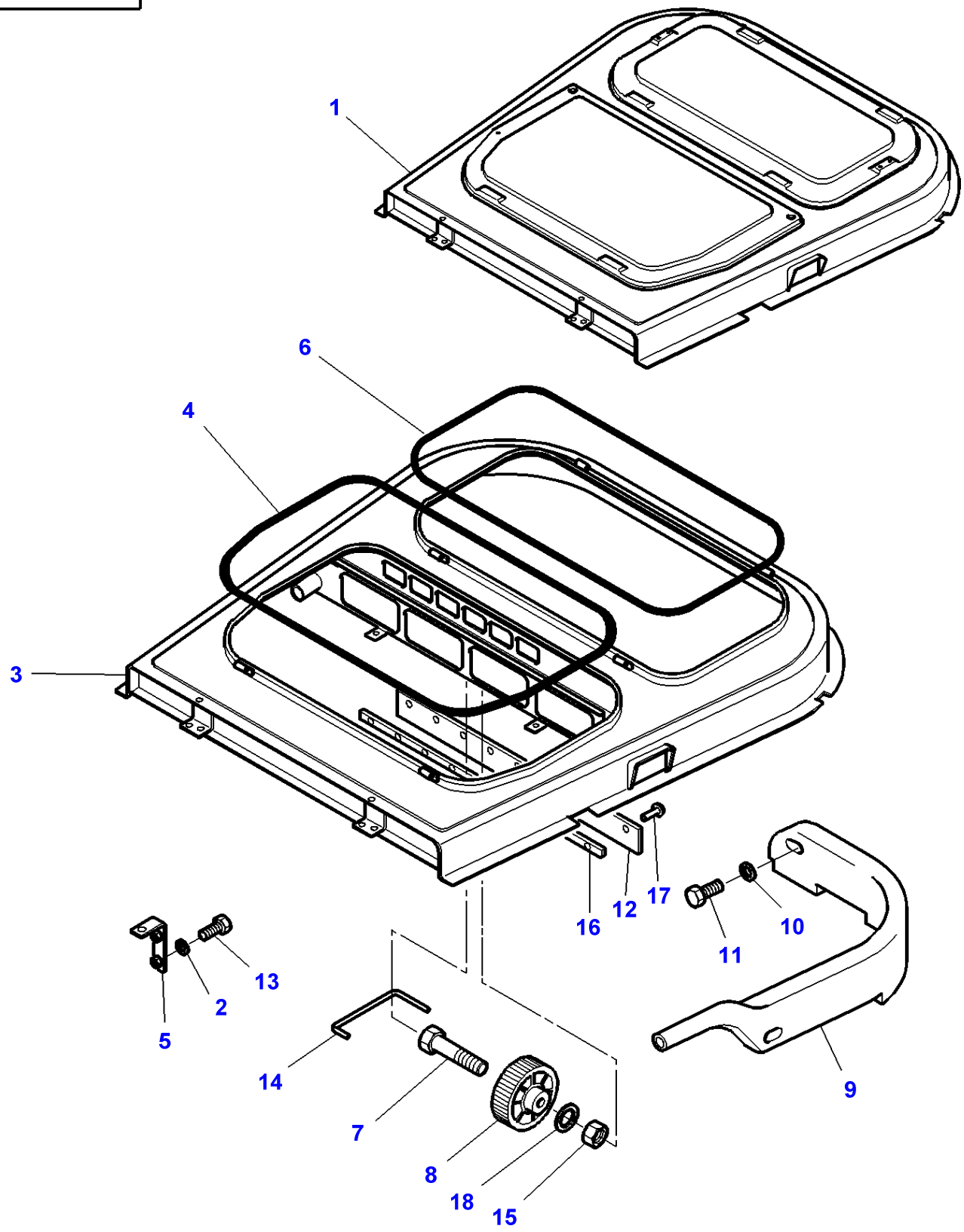

| Item | Part Number | Qty | Description | Comments |
|---|---|---|---|---|
| 1 | 3714088M93 | 1 | Roof | |
| 2 | 339102X1 | 2 | Washer | (1)<br>M5 |
| 3 | | 1 | Roof | (1)<br>Not serviced,order REF NO 1 |
| 4 | 3713158M1 | 1 | Gasket | (1)<br>Length 2858MM |
| 5 | 3713802M1 | 1 | Strap | (1) |
| 6 | 3713159M1 | 1 | Gasket | Length 2740MM |
| 7 | 339229X1 | 1 | Hex. Sock. Screw | (1)<br>M6 |
| 8 | 3713167M1 | 1 | Button | (1) |
| 9 | 3713163M1 | 1 | Manifold | (1)<br>Right Hand |
| | 3713164M1 | 1 | Manifold | (1)<br>Left Hand |
| 10 | 390971X1 | 4 | Washer | (1)<br>M6 |
| 11 | 3008342X1 | 4 | Screw Metric | (1)<br>M6X25 |
| 12 | 3713165M1 | 1 | Band | (1) |
| 13 | 390990X1 | 2 | Screw Metric | (1)<br>M5X12 |
| 14 | 3714090M1 | 1 | Draglink | (1) |
| 15 | 1441500X1 | 1 | Locknut | (1)<br>M6 |
| 16 | 3713166M2 | 1 | Plate | (1) |
| 17 | 338980X1 | 9 | Rivet | (1) |
| 18 | 390971X1 | 2 | Washer | (1) |

**FOOTNOTE [A]** AUSTRIA ONLY
**FOOTNOTE [B]** FOR CAB 5016524 & 5016525
**FOOTNOTE [C]** FOR CAB 5016526 & 5016527

1-AU42-600-A

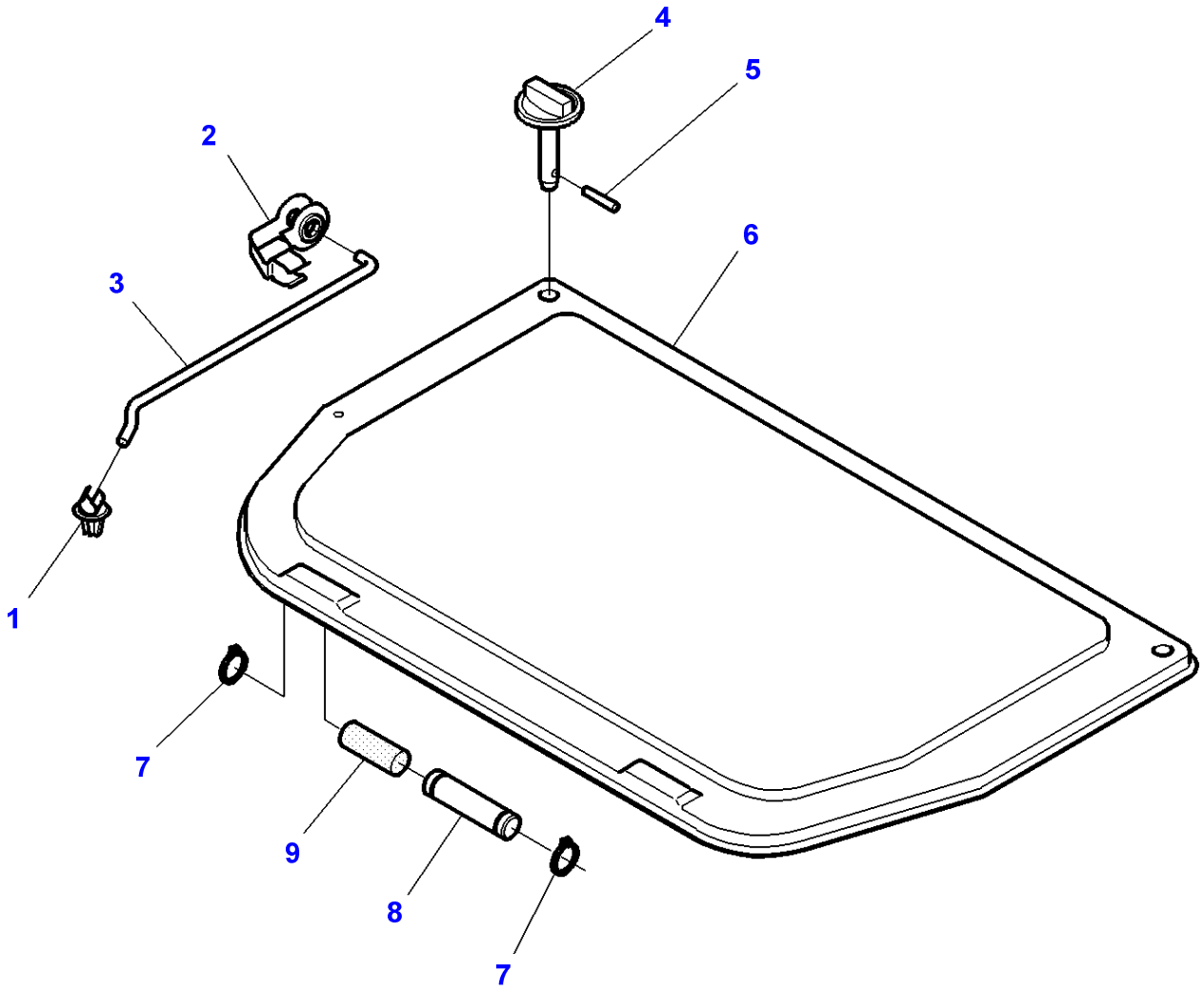

| Item | Part Number | Qty | Description |
|---|---|---|---|
| 1 | 3385465M1 | 1 | Pliers |
| 2 | 894225M1 | 1 | Clip |
| 3 | 3713161M1 | 1 | Stem |
| 4 | 3713160M91 | 2 | Stem |
| 5 | 3006465X1 | 2 | Roll Pin |
| 6 | 3712959M1 | 1 | Trap |
| 7 | 3000261X1 | 4 | Clip |
| 8 | 3303074M1 | 2 | Clevis Pin |
| 9 | 3303077M1 | 2 | Bush |

**FOOTNOTE [A]** FOR CAB 5016524 & 5016525
**FOOTNOTE [B]** FOR CAB 5016526 & 5016527

1-AU43-600-B

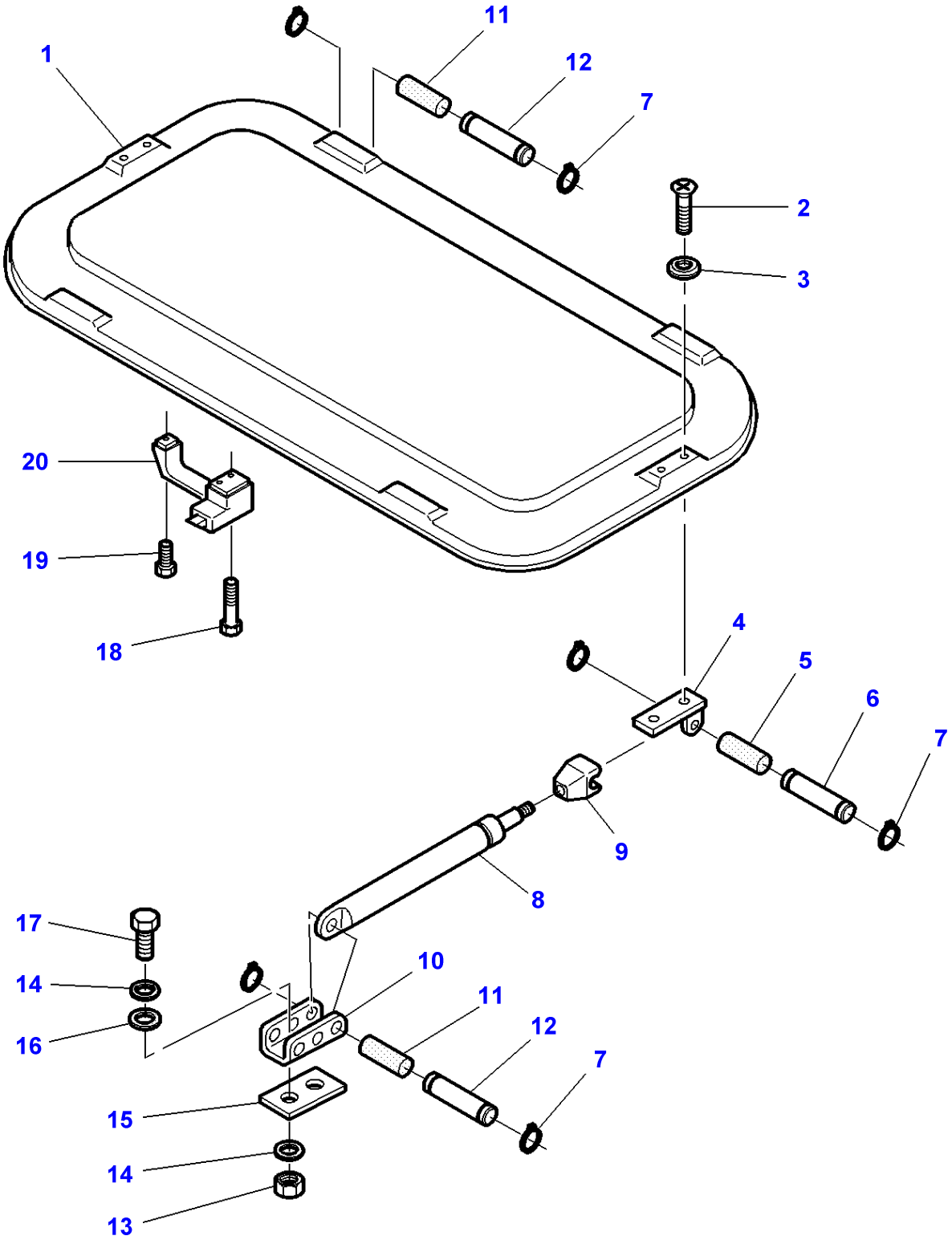

| Item | Part Number | Qty | Description | Comments |
|---|---|---|---|---|
| 1 | 3712960M1 | 1 | Trap | |
| 2 | 3009439X1 | 4 | Screw | M8X16 |
| 3 | 3530168M1 | 4 | Washer | |
| 4 | 3580934M91 | 1 | Support | Right Hand |
| | 3580933M91 | 1 | Support | Left Hand |
| 5 | 3303076M1 | 2 | Bush | |
| 6 | 3303075M1 | 2 | Clevis Pin | 6X33 |
| 7 | 3000261X1 | 8 | Clip | |
| 8 | 3303021M91 | 2 | Gas Strut | |
| 9 | 3303019M3 | 1 | Head | |
| 10 | 3301743M1 | 2 | Lock | |
| 11 | 3303077M1 | 4 | Bush | |
| 12 | 3303074M1 | 4 | Clevis Pin | 6X38 |
| 13 | 339169X1 | 4 | Nut | |
| 14 | 390972X1 | 8 | Washer Metric | |
| 15 | 3385446M1 | 2 | Gasket | |
| 16 | 3301742M1 | 4 | Washer | |
| 17 | 339123X1 | 4 | Hex. Sock. Screw | M8X20 |
| 18 | 1441967X1 | 1 | Screw Metric | M6X45 |
| 19 | 395579X1 | 1 | Screw Metric | M6X16 |
| 20 | 3388511M91 | 1 | Handle | |

**FOOTNOTE [A]** FOR CAB 5016524 & 5016525
**FOOTNOTE [B]** FOR CAB 5016526 & 5016527

1-AU19-601-B

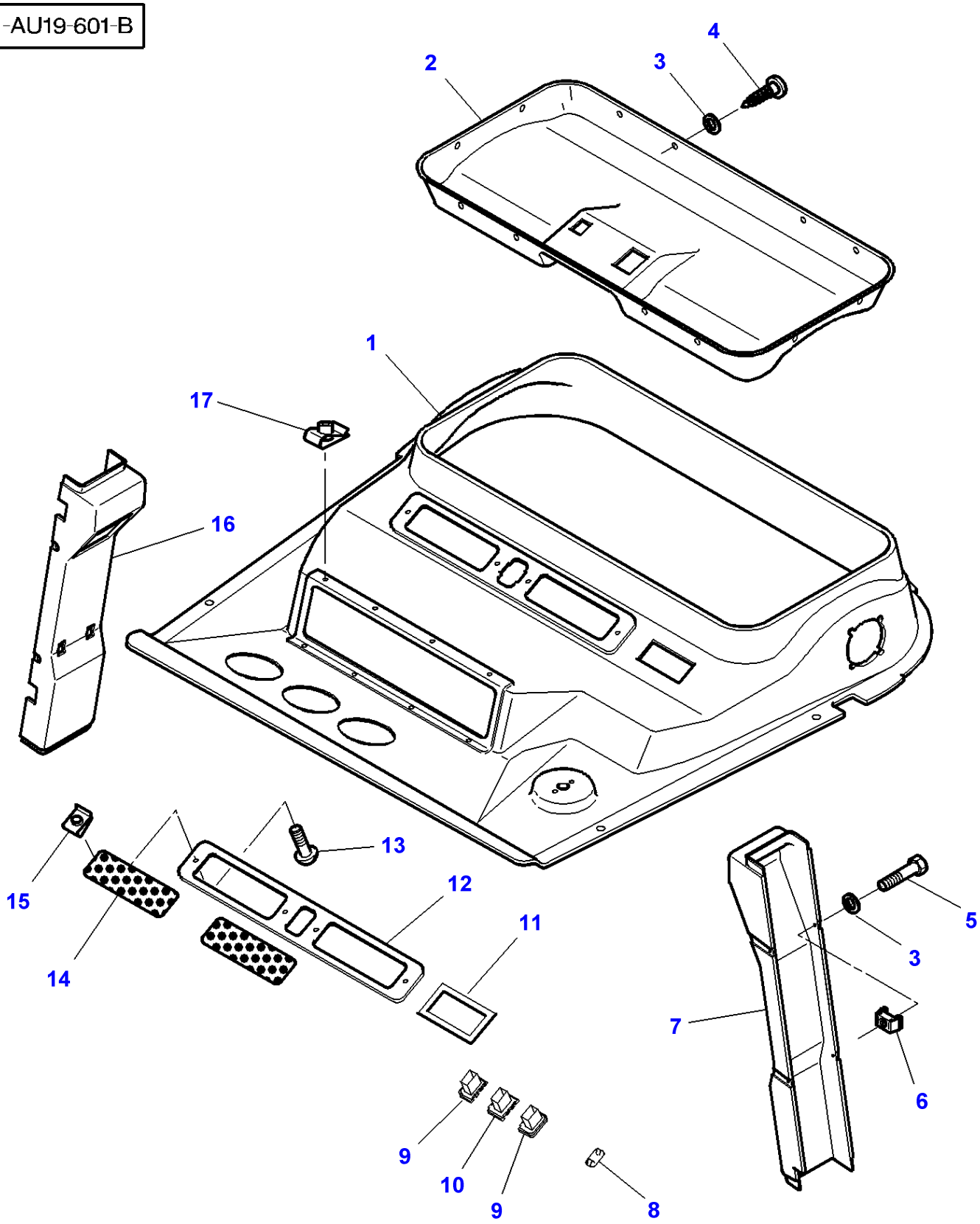

| Item | Part Number | Qty | Description | Comments |
|---|---|---|---|---|
| 1 | 3780279M1 | 1 | Facing | |
| 2 | 3712606M1 | 1 | Facing | |
| 3 | 1427000M1 | 23 | Washer | |
| 4 | 3389854M1 | 15 | Self Tap Screws | |
| 5 | 3580257M1 | 8 | Screw | M5 X 20 |
| 6 | 3615557M1 | 8 | Boxnut | M5 |
| 7 | 3712752M5 | 1 | Mounting | Left Hand |
| 8 | 3713151M1 | 1 | Tap | |
| 9 | 3713153M1 | 2 | Support | |
| 10 | 3713152M1 | 1 | Support | |
| 11 | 3713621M1 | 1 | Plate | |
| 12 | 3712608M1 | 1 | Cover | |
| 13 | 3010506X1 | 4 | Screw | |
| 14 | 3712607M1 | 2 | Grille | |
| 15 | 3715142M1 | 4 | Nut | Thickness 3/5MM |
| 16 | 3714919M1 | 1 | Mounting | Right Hand |
| 17 | 3715142M1 | 8 | Nut | Thickness 3/5MM |
| | 3388231M1 | 1 | Nut | M5 |
| | 3389351M1 | 2 | Nut | M10 |

**FOOTNOTE [A]** WITHOUT DATATRONIC
**FOOTNOTE [B]** FOR CAB 5016524 & 5016525

1-AU19-616-C

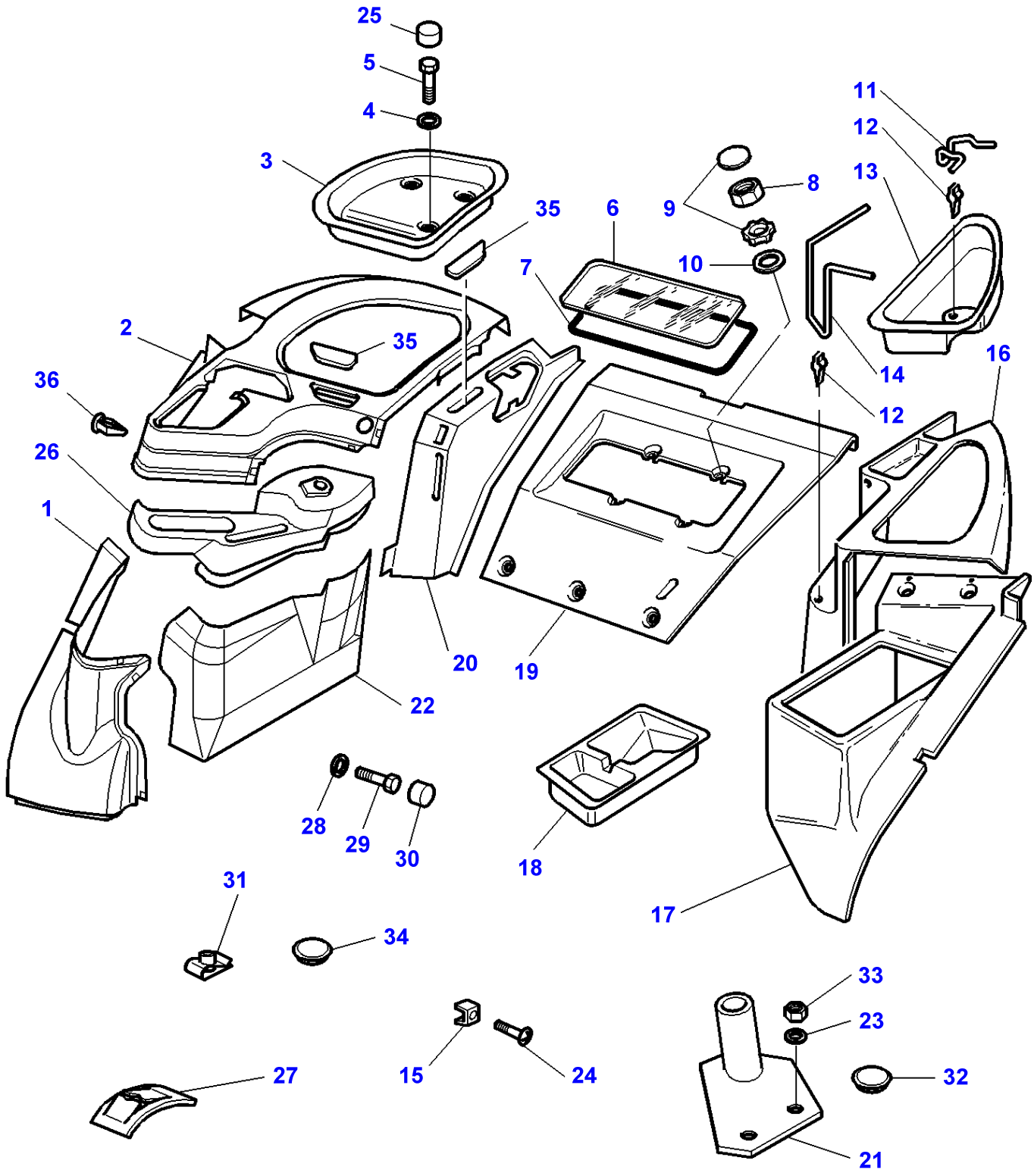
25
5
4
3
35
6
9
8
11
12
13
10
7
2
35
36
14
16
12
26
1
20
19
22
28
29
30
18
17
31
34
33
23
32
27
15
24
21

| Item | Part Number | Qty | Description | Comments |
|---|---|---|---|---|
| 1 | 3778252M2 | 1 | Plate Clamping | Right Hand |
| 2 | 3778055M1 | 1 | Plate Clamping | |
| 3 | 3712410M1 | 1 | Pocket | Right Hand |
| 4 | 390597X1 | 4 | Washer Metric | Diameter 10MM |
| 5 | 339282X1 | 4 | Screw Metric | M10 X 16 |
| 6 | 3714482M1 | 1 | Window | |
| 7 | 3714481M1 | 1 | Gasket | |
| 8 | 339169X1 | 4 | Nut | |
| 9 | 3619241M1 | 4 | Button | |
| 10 | 390972X1 | 4 | Washer Metric | |
| 11 | 3713500M2 | 1 | Stem | |
| 12 | 3713616M1 | 2 | Clip | |
| 13 | 3712414M1 | 1 | Pocket | Left Hand |
| 14 | 3713501M1 | 1 | Stem | |
| 15 | 3580062M1 | 8 | Nut | M5 |
| 16 | 3712412M1 | 1 | Panel | |
| 17 | 3712413M2 | 1 | Panel | |
| 18 | 3712925M1 | 1 | Pocket | |
| 19 | 3712421M2 | 1 | Breech Plate | |
| 20 | 3712408M1 | 1 | Panel | |
| 21 | 3714666M1 | 1 | Support | |
| 22 | 3778253M2 | 1 | Panel | |
| 23 | 22428X | 2 | Lock Washer | |
| 24 | 3010506X1 | 21 | Screw | M5X16 |
| | 3010578X1 | 2 | Screw | M5X10 |
| 25 | 3619609M1 | 4 | Helmet | |
| 26 | 3778426M1 | 1 | Plate Clamping | [D] |
| 27 | 3714529M1 | 4 | Nut Special | |
| 28 | 3715991M1 | 1 | Spacer | |
| 29 | 339123X1 | 1 | Hex. Sock. Screw | |
| 30 | 3616277M1 | 1 | Helmet | |
| 31 | 3715142M1 | 11 | Nut | Thickness 3/5MM |
| | 3715143M1 | 3 | Nut | Thickness 0,5/4MM |
| 32 | 3580982M1 | 1 | Plug | [A] |
| 33 | 339169X1 | 2 | Nut | M8 |
| 34 | 3713587M1 | X | Plug | [F,G] Diameter 22MM |
| 35 | 3712984M1 | X | Plate | [F,G] |
| 36 | 3780626M1 | 4 | Tie | |

**FOOTNOTE [A]** WITHOUT ROTATING LIGHT
**FOOTNOTE [D]** WITHOUT REVERSING GEAR MANUAL
**FOOTNOTE [F]** WITHOUT AUTOMATIC HITCH
**FOOTNOTE [G]** LESS PTO

1-AU19-613-A

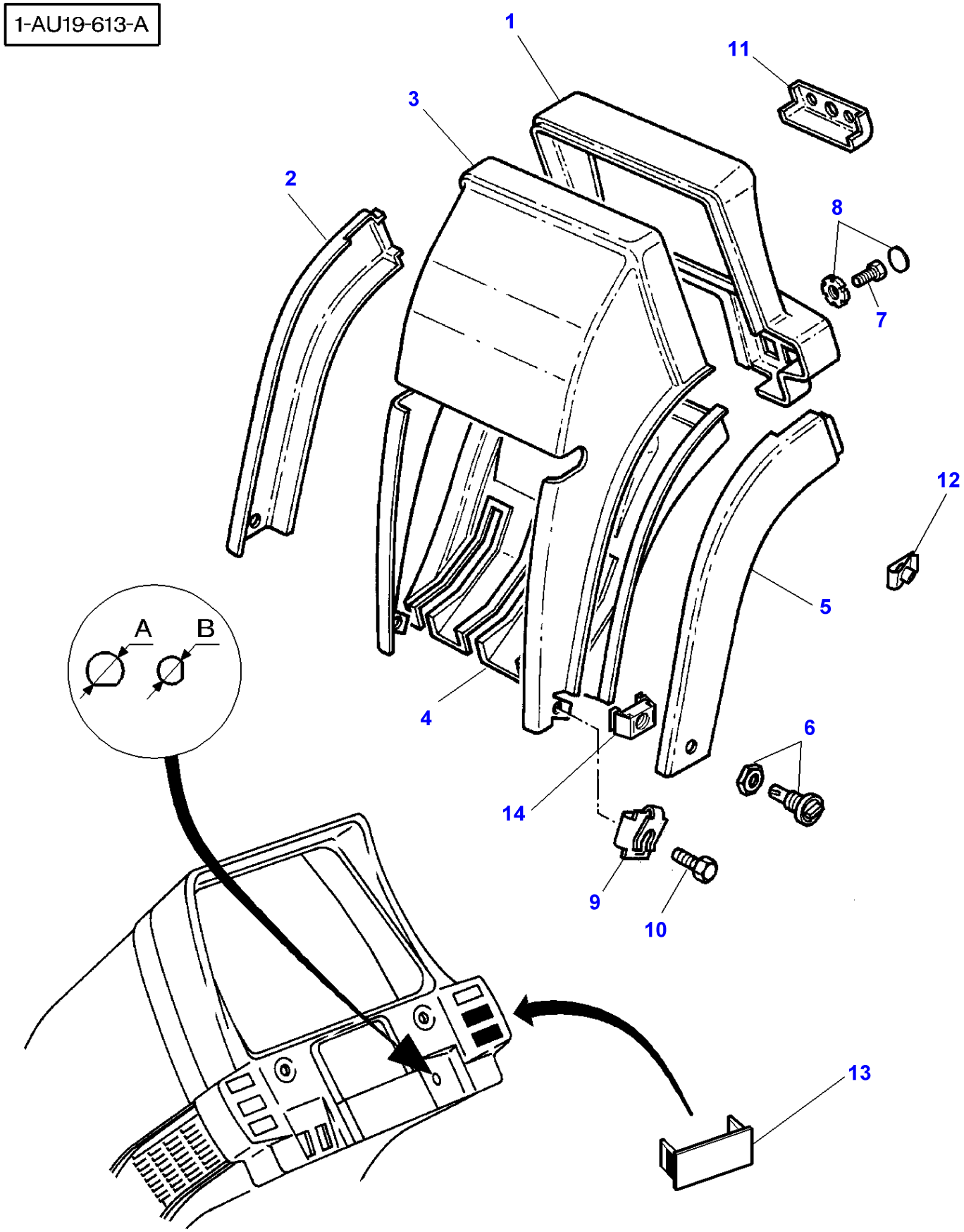

| Item | Part Number | Qty | Description | Comments |
|---|---|---|---|---|
| 1 | 3778450M1 | 1 | Plate Clamping | A<br>Diameter 19,74MM |
| | 3712418M1 | 1 | Plate Clamping | B<br>Diameter 16MM |
| 2 | 3712420M1 | 1 | Facing | Right Hand |
| 3 | 3712416M1 | 1 | Envelope | |
| 4 | 3712417M1 | 1 | Envelope | |
| 5 | 3712419M1 | 1 | Facing | Left Hand |
| 6 | 3618739M1 | 2 | Button | |
| 7 | 339560X1 | 2 | Hex. Sock. Screw | M6 X 16 |
| 8 | 3713550M1 | 2 | Latch | |
| 9 | 3388231M1 | 1 | Nut | M5 |
| 10 | 3010506X1 | 6 | Screw | M5 X 16 |
| | 3010578X1 | 3 | Screw | M5X10 |
| 11 | 3714209M1 | 1 | Plate | |
| 12 | 3715142M1 | 2 | Nut | Thickness 3/5MM |
| | 3715143M1 | 1 | Nut | Thickness 0,5/4MM |
| 13 | 3713151M1 | 2 | Tap | |
| 14 | 3618738M1 | 2 | Clip | |

**FOOTNOTE [A]** FOR CAB 5016526 & 5016527
**FOOTNOTE [B]** FOR CAB 5016524 & 5016525

1-AU19-607-A

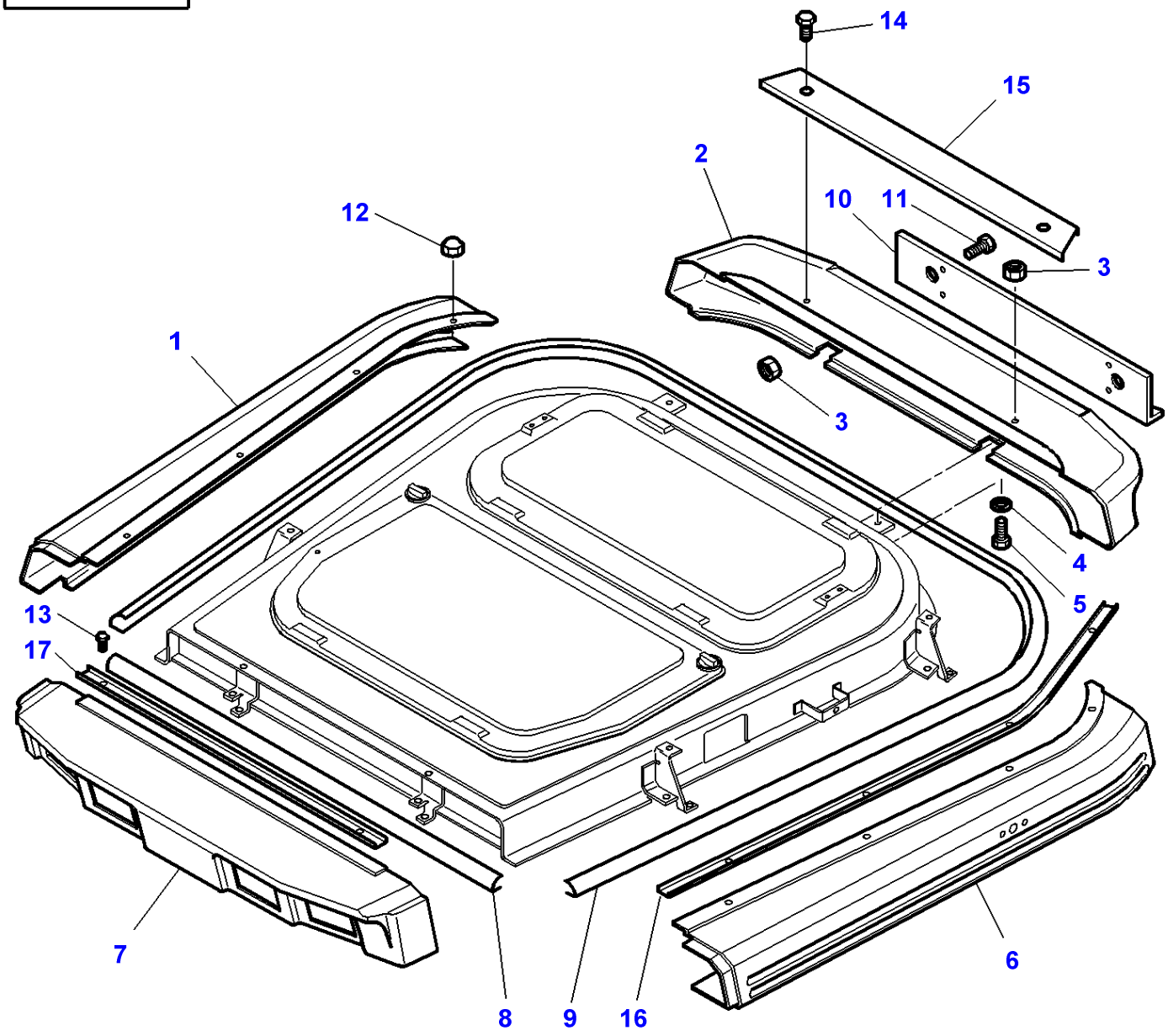

| Item | Part Number | Qty | Description | Comments |
|---|---|---|---|---|
| 1 | 3712833M2 | 1 | Trim | |
| 2 | 3712831M2 | | Visor | |
| 3 | 339030X1 | 12 | Nut Metric | M6 |
| 4 | 3019571X1 | 14 | Washer | Diameter 6MM |
| 5 | 339666X1 | 4 | Hex. Sock. Screw | M6X20 |
| 6 | 3712832M1 | 1 | Trim | |
| 7 | 3712830M1 | 1 | Visor | |
| 8 | 3714885M1 | 1 | Gasket | Length 1050mm |
| 9 | 3714884M1 | 1 | Gasket | Length 3700mm |
| 10 | 3715422M1 | 1 | Deflector | |
| 11 | 391074X1 | 4 | Hex. Sock. Screw | M6x12MM |
| 12 | 3010594X1 | 8 | Nut Metric | |
| 13 | 339804X1 | 2 | Hex. Sock. Screw | M6X25 |
| 14 | 1441268X1 | 2 | Screw Metric | M6X30 |
| 15 | 3715679M1 | 1 | Profile | |
| 16 | 3715676M1 | 1 | Profile | Right Hand |
| | 3715677M1 | 1 | Profile | Left Hand |
| 17 | 3715678M1 | 1 | Profile | |

**FOOTNOTE [A]** WITH 4 HEADLAMPS

1-AU11-604-B

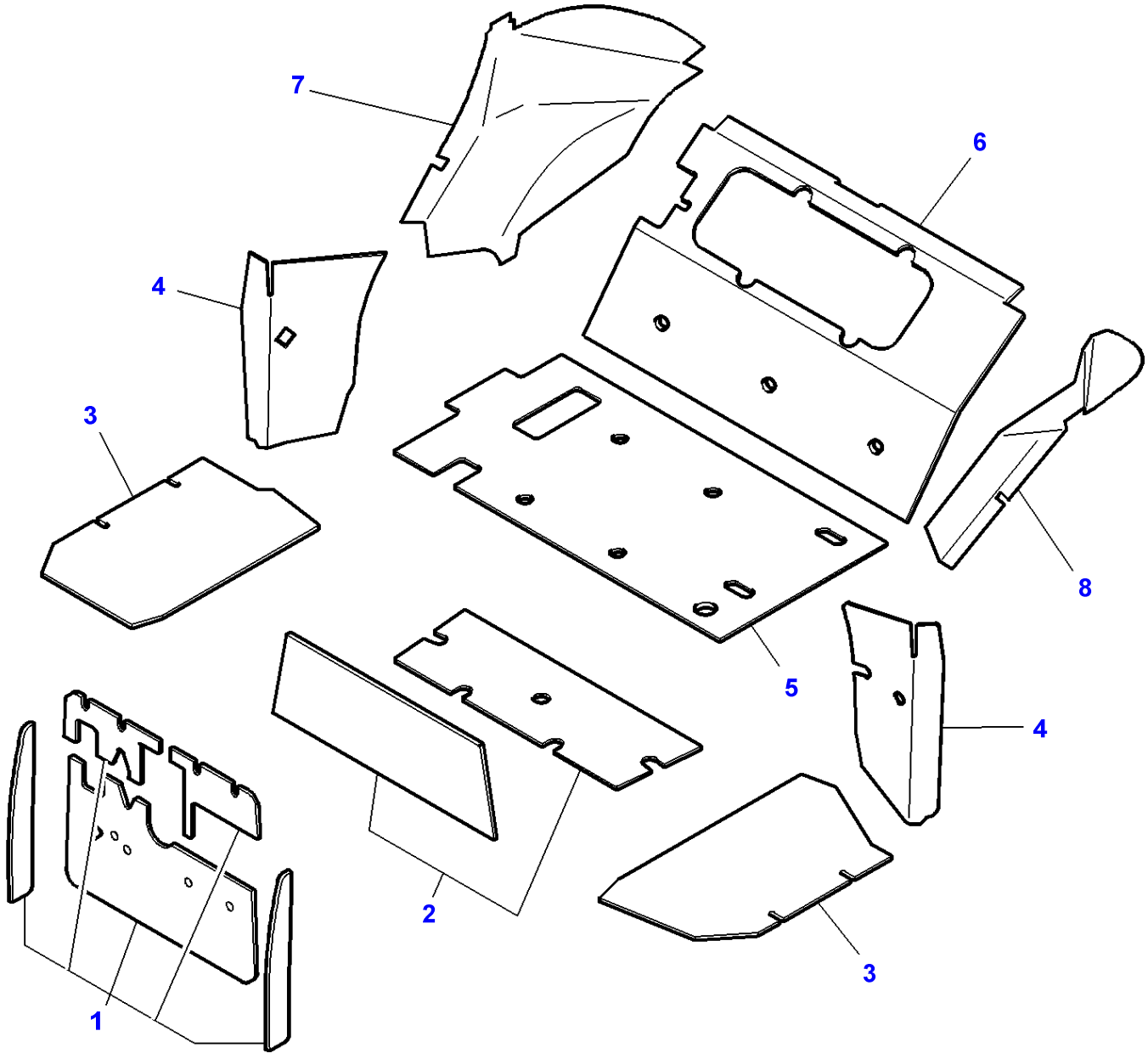

| Item | Part Number | Qty | Description | Comments |
|---|---|---|---|---|
| 1 | 3713870M93 | 1 | Sound Reduction | [A] |
| 2 | 3778445M91 | 1 | Sound Reduction | |
| 3 | 3713881M92 | 1 | Sound Reduction | |
| 4 | 3713884M93 | 1 | Sound Reduction | |
| 5 | 3713899M3 | 1 | Sound Reduction | |
| 6 | 3713898M5 | 1 | Sound Reduction | |
| 7 | 3713897M5 | 1 | Sound Reduction | Right Hand |
| 8 | 3713896M5 | 1 | Sound Reduction | Left Hand |

**FOOTNOTE [A]** WITH ASSISTED BRAKE
**FOOTNOTE [B]** WITH MECHANICAL BRAKES

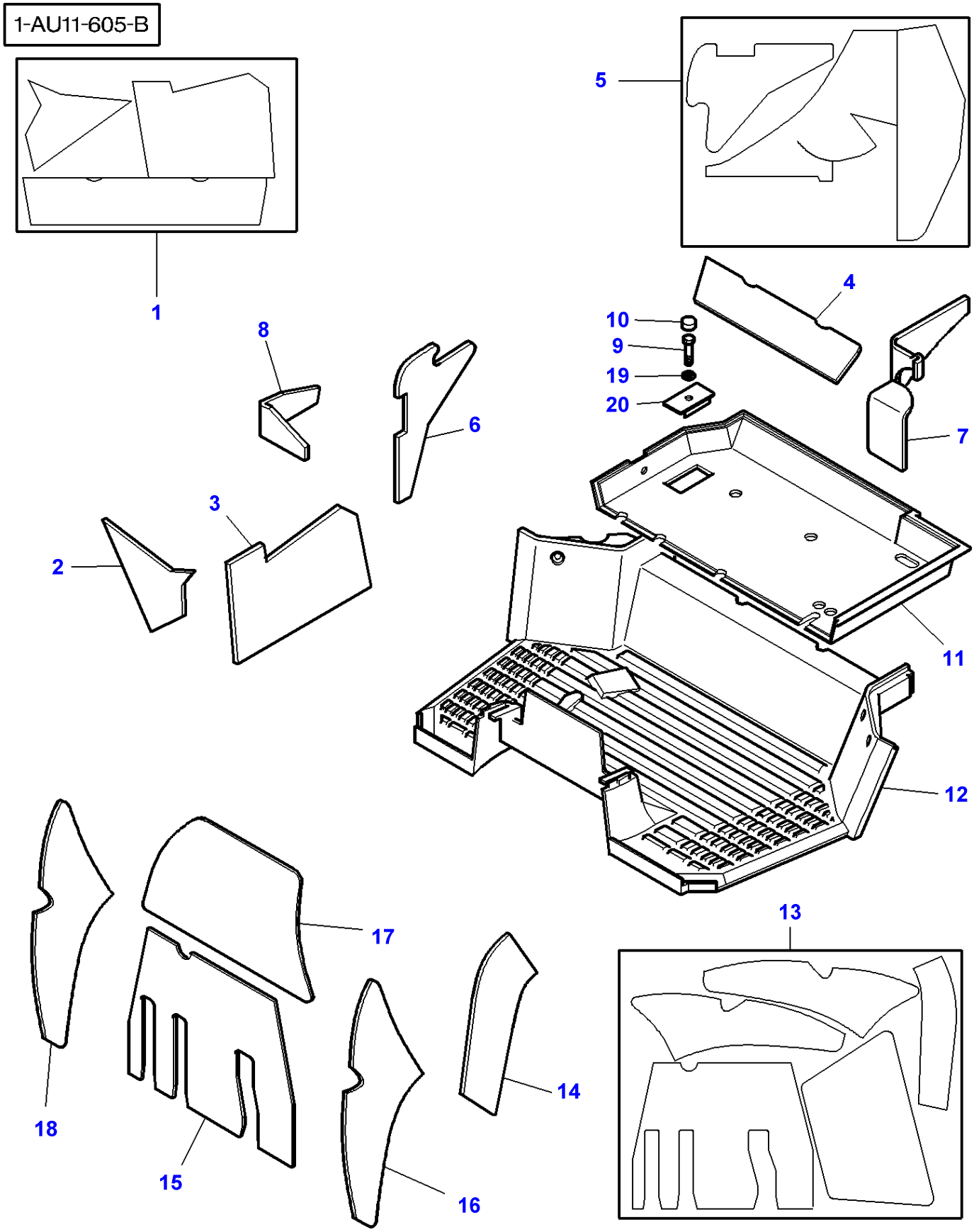
1-AU11-605-B
1
5
4
10
9
19
20
8
6
7
3
2
11
12
17
18
15
16
14
13

| Item | Part Number | Qty | Description | Comments |
|---|---|---|---|---|
| 1 | 3778448M91 | 1 | Sound Reduction | |
| 2 | | 1 | Sound Reduction | (1) Not serviced,order REF.1 |
| 3 | | 1 | Sound Reduction | (1) Not serviced,order REF.1 |
| 4 | | 1 | Sound Reduction | (1) Not serviced,order REF.1 |
| 5 | 3713892M93 | 1 | Sound Reduction | |
| 6 | | 1 | Sound Reduction | (5) Not serviced,order REF.5 |
| 7 | | 1 | Sound Reduction | (5) Not serviced,order REF.5 |
| 8 | | 1 | Sound Reduction | (5) Not serviced,order REF.5 |
| 9 | 339124X1 | 1 | Hex. Sock. Screw | M8X16 |
| 10 | 3616277M1 | 1 | Helmet | |
| 11 | 3777378M3 | 1 | Mat | |
| 12 | 3777377M2 | 1 | Mat | |
| 13 | 3713915M92 | 1 | Sound Reduction | |
| 14 | | 1 | Sound Reduction | (13) Not serviced,order REF.13 |
| 15 | | 1 | Sound Reduction | (13) Not serviced,order REF.13 |
| 16 | | 1 | Sound Reduction | (13) Not serviced,order REF.13 |
| 17 | | 1 | Sound Reduction | (13) Not serviced,order REF.13 |
| 18 | | 1 | Sound Reduction | (13) Not serviced,order REF.13 |
| 19 | 390972X1 | 1 | Washer Metric | |
| 20 | 3778789M1 | 1 | Helmet | |

1-AU45-602-B

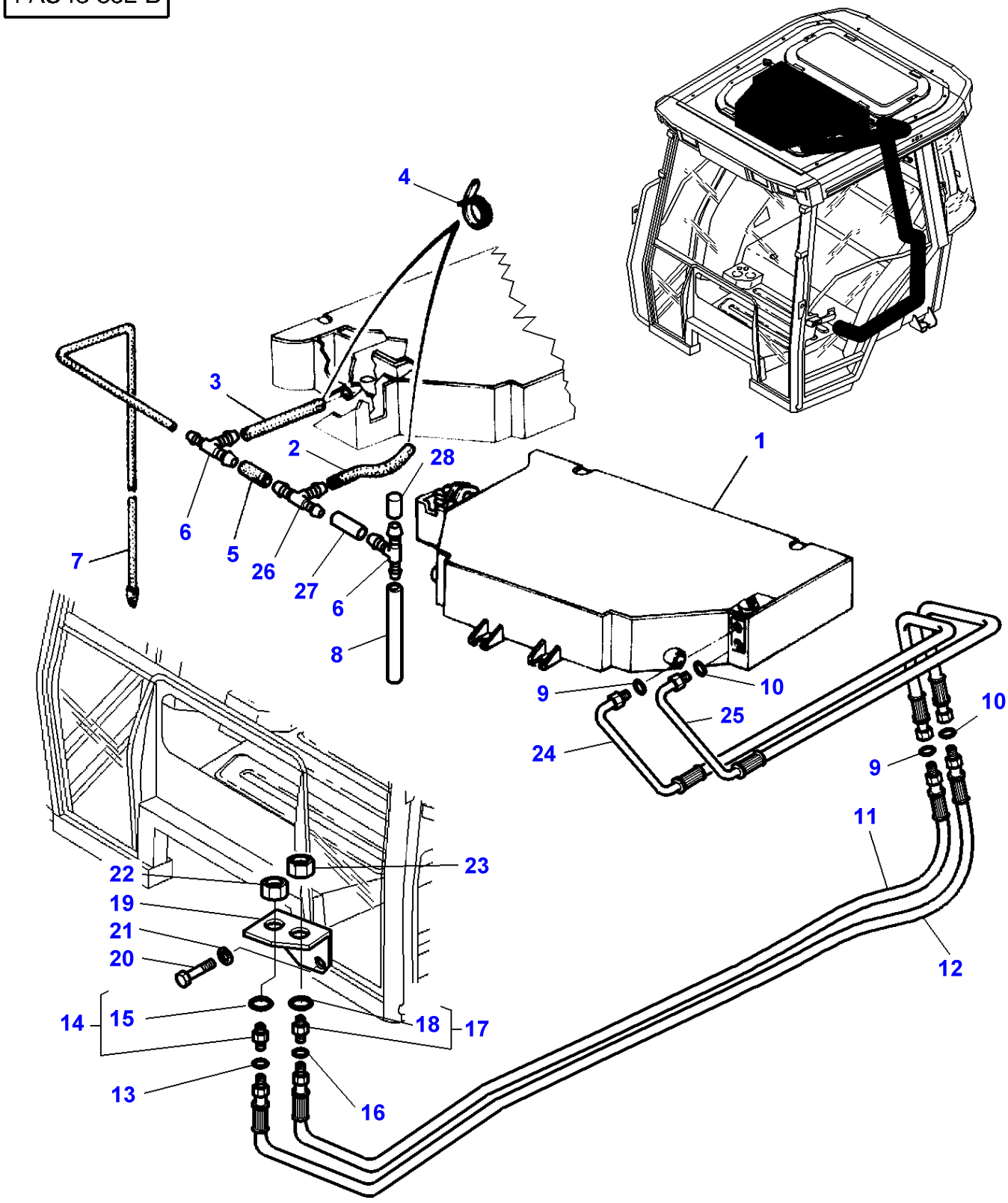
4
3
2
28
1
6
5
26
27
6
7
8
9
10
25
24
10
9
11
12
22
23
19
21
20
14
15
18
17
13
16

| Item | Part Number | Qty | Description | Comments |
|---|---|---|---|---|
| 1 | 3713375M2 | 1 | Air Conditioner | |
| 2 | 3777614M1 | 2 | Tube | Diameter 15,9-23MM<br>Length 150MM |
| 3 | 3777616M1 | 2 | Hose | Diameter 15,9-23MM<br>Length 195MM |
| 4 | 3000483X1 | 4 | Clamp | Diameter 12-22MM |
| 5 | 3777613M1 | 2 | Hose | Diameter 15,9-23MM<br>Length 60MM |
| 6 | 3388779M1 | 4 | Union | Diameter 16-16-08MM |
| 7 | 3713470M1 | 2 | Hose | Diameter 08-12<br>Length 165MM |
| 8 | 3777744M1 | 2 | Tube | Diameter 8MM<br>Length 1500MM |
| 9 | 3010473X1 | 2 | O Ring | |
| 10 | **3010471X1** | 2 | O Ring | |
| 11 | 3714143M1 | 1 | Hydr Hose | |
| 12 | 3714246M1 | 1 | Hydr Hose | |
| 13 | 3010502X1 | 1 | O Ring | |
| 14 | 368544X1 | 1 | Union | |
| 15 | 3600218M1 | 1 | Joint | (14) |
| 16 | 3010474X1 | 1 | O Ring | |
| 17 | 368523X1 | 1 | Union | |
| 18 | 3600219M1 | 1 | Joint | (17) |
| 19 | 3713615M1 | 1 | Support | |
| 20 | 339124X1 | 2 | Hex. Sock. Screw | M8X16 |
| 21 | 390972X1 | 2 | Washer Metric | |
| 22 | 1691973M1 | 1 | Nut | |
| 23 | 1691972M1 | 1 | Nut | |
| 24 | 3713462M1 | 1 | Hydr Hose | |
| 25 | 3714144M1 | 1 | Hydr Hose | |
| 26 | 3010683X1 | 2 | Teepiece | Diameter 16-16-16MM |
| 27 | 3777741M1 | 2 | Hose | Diameter 16MM<br>Length 490MM |
| 28 | 3777737M1 | 2 | Plug | |

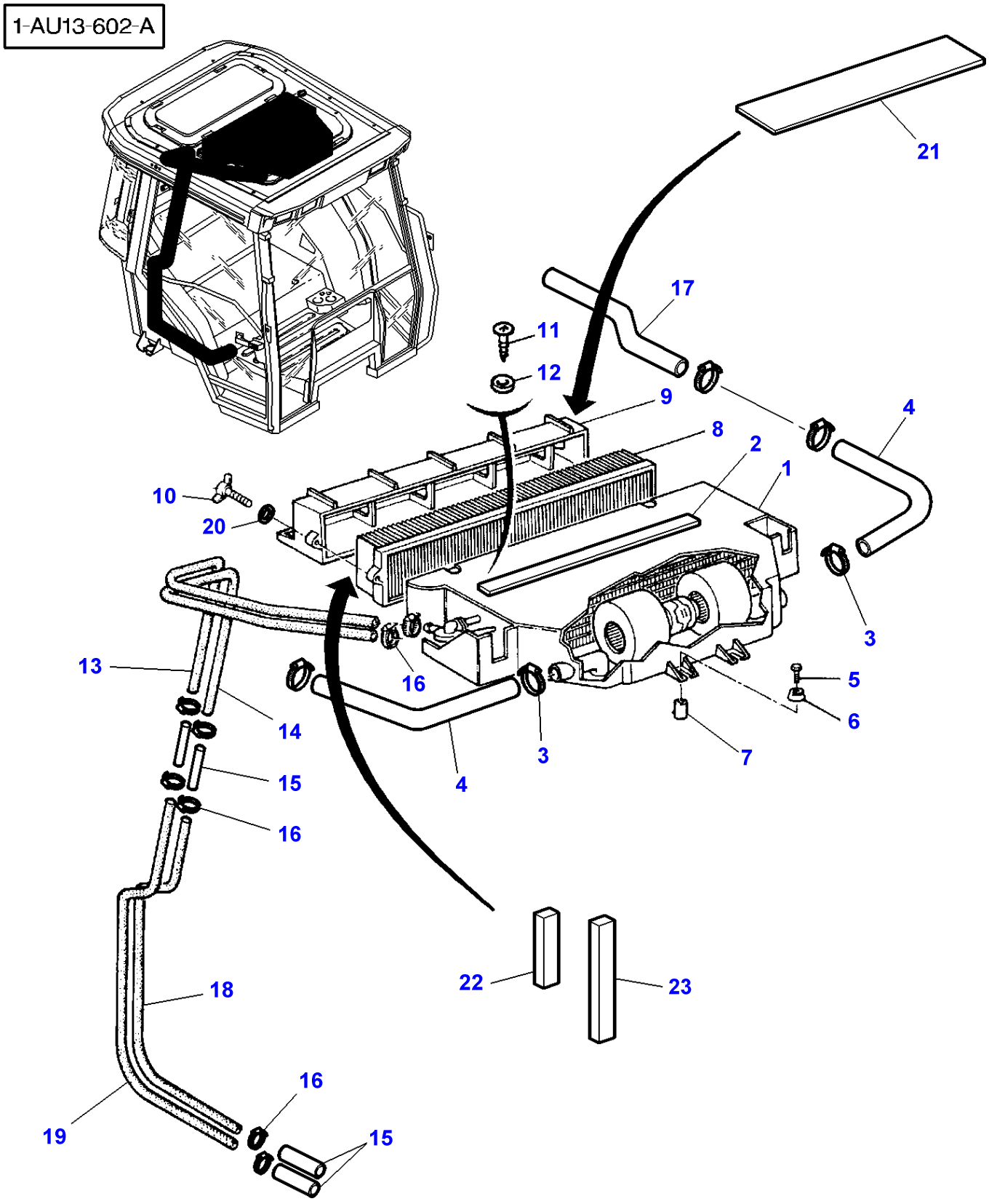
1-AU13-602-A
21
17
11
12
9
8
2
1
4
10
20
3
13
16
5
6
14
3
7
15
4
16
18
22
23
16
19
15

| Item | Part Number | Qty | Description | Comments |
|---|---|---|---|---|
| 1 | 3713375M2 | 1 | Air Conditioner | |
| 2 | 3713745M1 | 1 | Gasket | 15X05X1950 |
| 3 | 338616X1 | 8 | Hose Clip | Diameter 32X50 |
| 4 | 3387515M1 | 2 | Hose | |
| 5 | 339009X1 | 4 | Hex. Sock. Screw | M8X35 |
| 6 | 3387512M1 | 8 | Buffer | |
| 7 | 3387513M1 | 4 | Spacer | |
| 8 | 3388840M2 | 1 | Cab Filter | |
| 9 | 3388743M1 | 1 | Frame Assy | |
| 10 | 3388758M2 | 2 | Wingbolt | M6X60 |
| 11 | 339112X1 | 1 | Screw Metric | M4X12 |
| 12 | 3001856X1 | 1 | Washer Metric | |
| 13 | 3714872M1 | 1 | Hose | Length 1000MM |
| 14 | 3714871M1 | 1 | Hose | Length 900MM |
| 15 | 3713469M1 | 4 | Tube | |
| 16 | 3000483X1 | 8 | Clamp | Diameter 16-27 |
| 17 | 3713461M1 | 2 | Hose | |
| 18 | 3779739M1 | 1 | Hose | Length 1670 MM |
| 19 | 3714873M1 | 1 | Hose | Length 2350MM |
| 20 | 391038X1 | 2 | Washer | |
| 21 | 3778497M2 | 1 | Foam | 915X150X12MM |
| 22 | 3778658M1 | 2 | Gasket | 38X13X60MM |
| 23 | 3778659M1 | 2 | Gasket | 38X13X80MM |

**FOOTNOTE [A]** FOR CAB 5016524 & 5016525

1-AU44-600-A

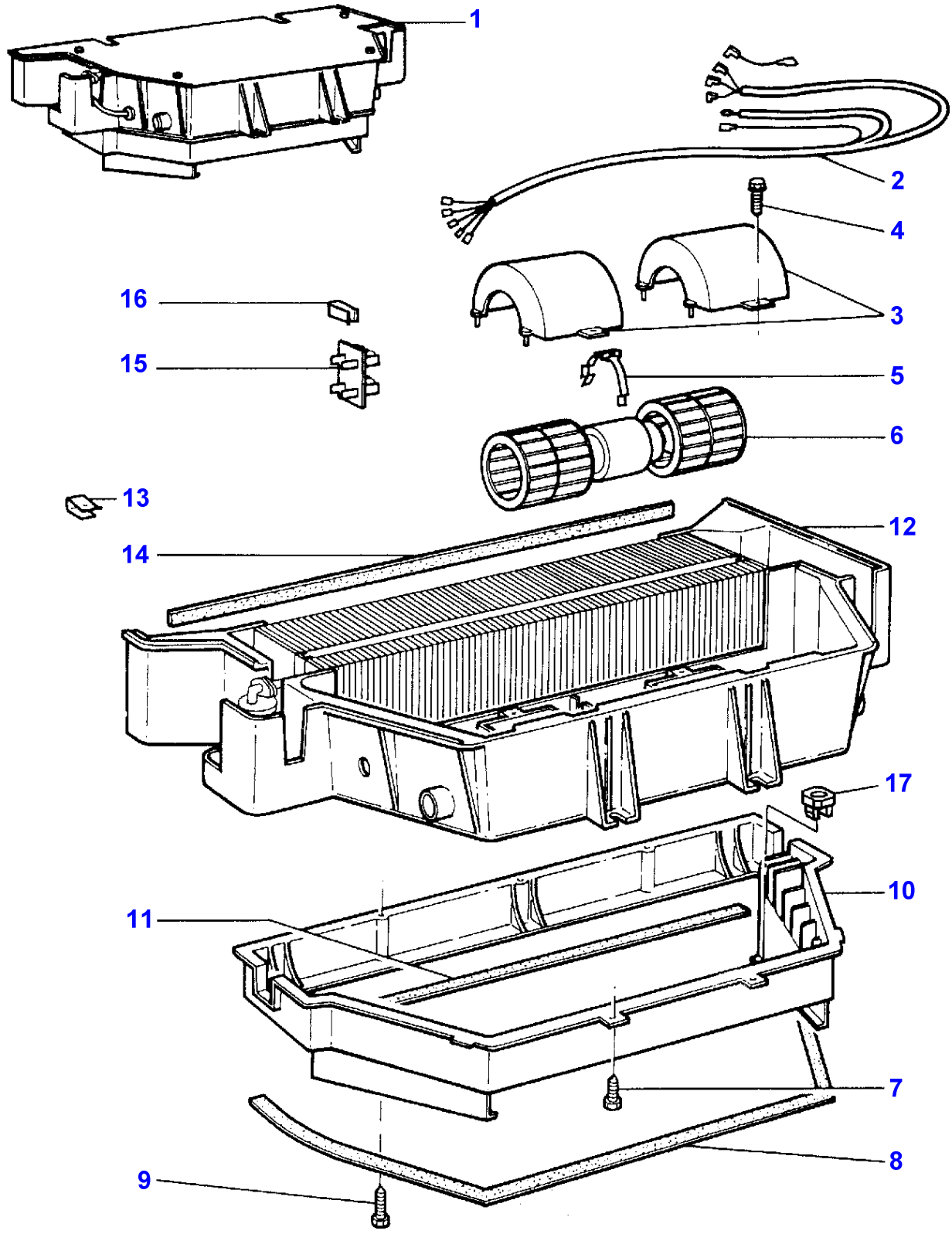

| Item | Part Number | Qty | Description | Comments |
|---|---|---|---|---|
| 1 | 3713375M2 | 1 | Air Conditioner | |
| 2 | 3902318M91 | 1 | Harness | (1) |
| 3 | 3310833M1 | 2 | Cover | (1) Replace and repair. Old interchangeable with new 3902319M1 |
| 4 | 3310837M1 | 4 | Screw | (1) |
| 5 | 3902320M1 | 1 | Strap | (1) |
| 6 | 3310831M91 | 1 | Motor | (1) Replace and repair. Old interchangeable with new 3902321M91 |
| 7 | 3310837M1 | 6 | Screw | (1) |
| 8 | 3902322M1 | 1 | Foam | (1) |
| 9 | 3310841M1 | 3 | Screw | (1) |
| 10 | 3310840M1 | 1 | Housing | (1) Replace and repair. Old interchangeable with new 3902323M1 |
| 11 | 3310843M1 | 1 | Foam | (1) Replace and repair. Old not interchangeable with new 3902324M1 |
| 12 | 3310825M1 | 1 | Housing | (1) |
| 13 | 3310842M1 | 9 | Strap | (1) |
| 14 | 3310849M1 | 1 | Foam | (1) Replace and repair. Old interchangeable with new 3902325M1 |
| 15 | 3304510M92 | 1 | Resistor | (1) Replace and repair. Old interchangeable with new 3902326M91 |
| 16 | 3310834M1 | 1 | Strap | (1) |
| 17 | 3583649M1 | 1 | Nut Special | (1) |

1-AU44-601-E

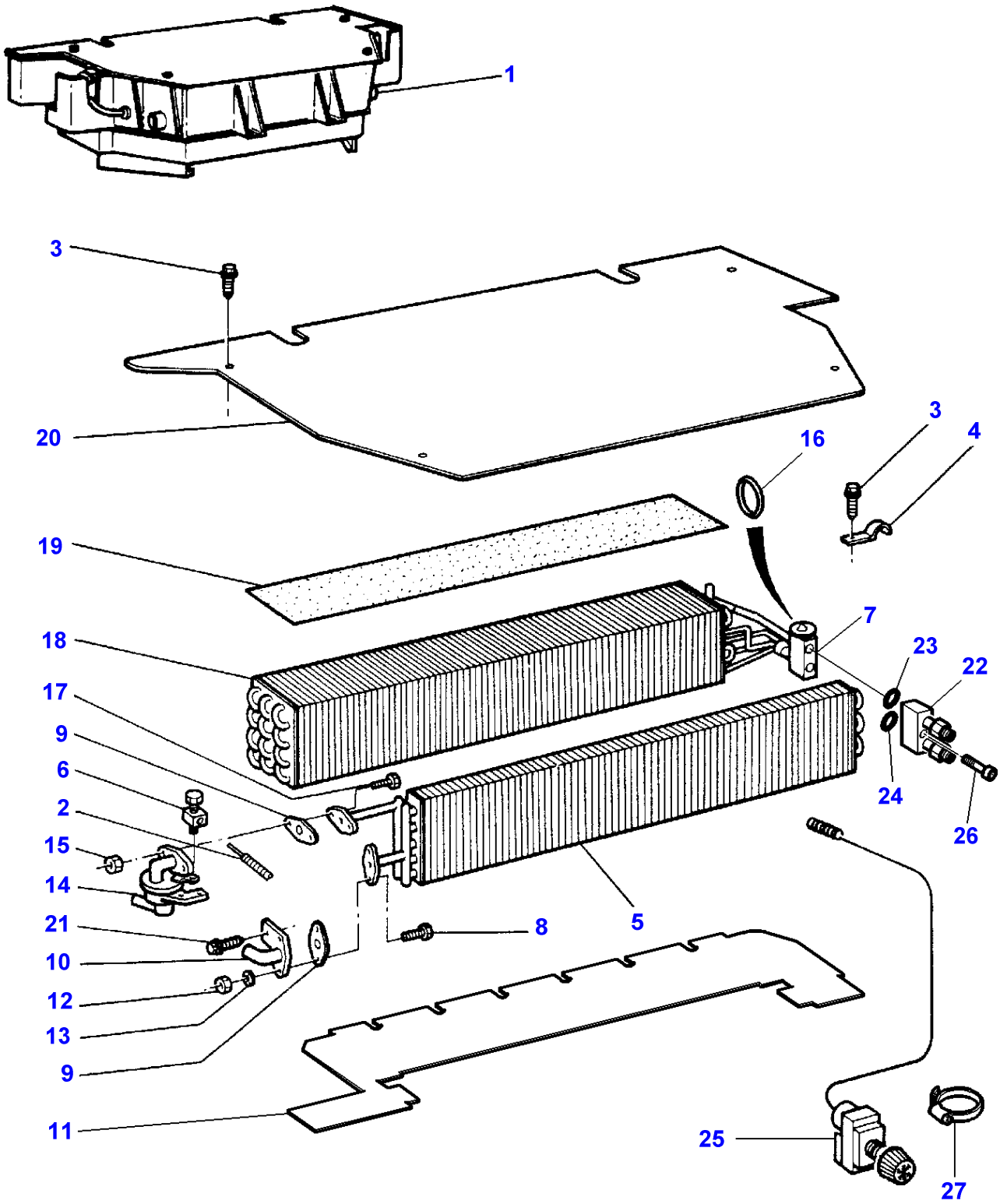

| Item | Part Number | Qty | Description | Comments |
|---|---|---|---|---|
| 1 | 3713375M2 | 1 | Air Conditioner | |
| 2 | 3902212M1 | 1 | Cable | |
| 3 | 3310837M1 | 6 | Screw | (1) |
| 4 | 3310836M1 | 1 | Strap | (1) |
| 5 | 3310827M92 | 1 | Radiator | (1) |
| 6 | 3311579M91 | 1 | Union | (1) |
| 7 | 3902334M91 | 1 | Regulator | (1) |
| 8 | 3902089M1 | 2 | Screw | (1) |
| 9 | 3902327M1 | 2 | Gasket | (1) |
| 10 | 3310946M1 | 1 | Elbow | (1)<br>Replace and repair. Old interchangeable with new 3902328M1 |
| 11 | 3902329M2 | 1 | Plate | (1)<br>Replace and repair. Old interchangeable with new 3902329M1 |
| 12 | 3902090M1 | 2 | Nut | (1) |
| 13 | 3902090M1 | 2 | Nut | (1) |
| 14 | 3310945M1 | 1 | Cock | (1)<br>Replace and repair. Old not interchangeable with new 3902330M1 |
| 15 | 3902090M1 | 2 | Nut | (1) |
| 16 | 3902499M1 | 1 | Gasket | (1)<br>Diameter 6,7MM |
| | 3902500M1 | 3 | Gasket | (1)<br>Diameter 13,4MM |
| 17 | 3902089M1 | 2 | Screw | (1) |
| 18 | 3902331M91 | 1 | Evaporator | (1) |
| 19 | 3902332M1 | 1 | Foam | (1) |
| 20 | 3310839M1 | 1 | Plate | (1)<br>Replace and repair. Old interchangeable with new 3902333M1 |
| 21 | 3902089M1 | 2 | Screw | (1) |
| 22 | 3902549M91 | 1 | Connection | (1) |
| 23 | 3902550M1 | 1 | O Ring | (1)<br>Diameter 6,7X1,8MM |
| 24 | 3902551M1 | 1 | O Ring | (1)<br>Diameter 13,4X2,4MM |
| 25 | 3310669M91 | 1 | Thermostat | (1)<br>Replace and repair. Old interchangeable with new 3902666M91 |
| 26 | 3015257X1 | 2 | Screw Metric | (1)<br>M6X55 |
| 27 | 3000483X1 | 2 | Clamp | |

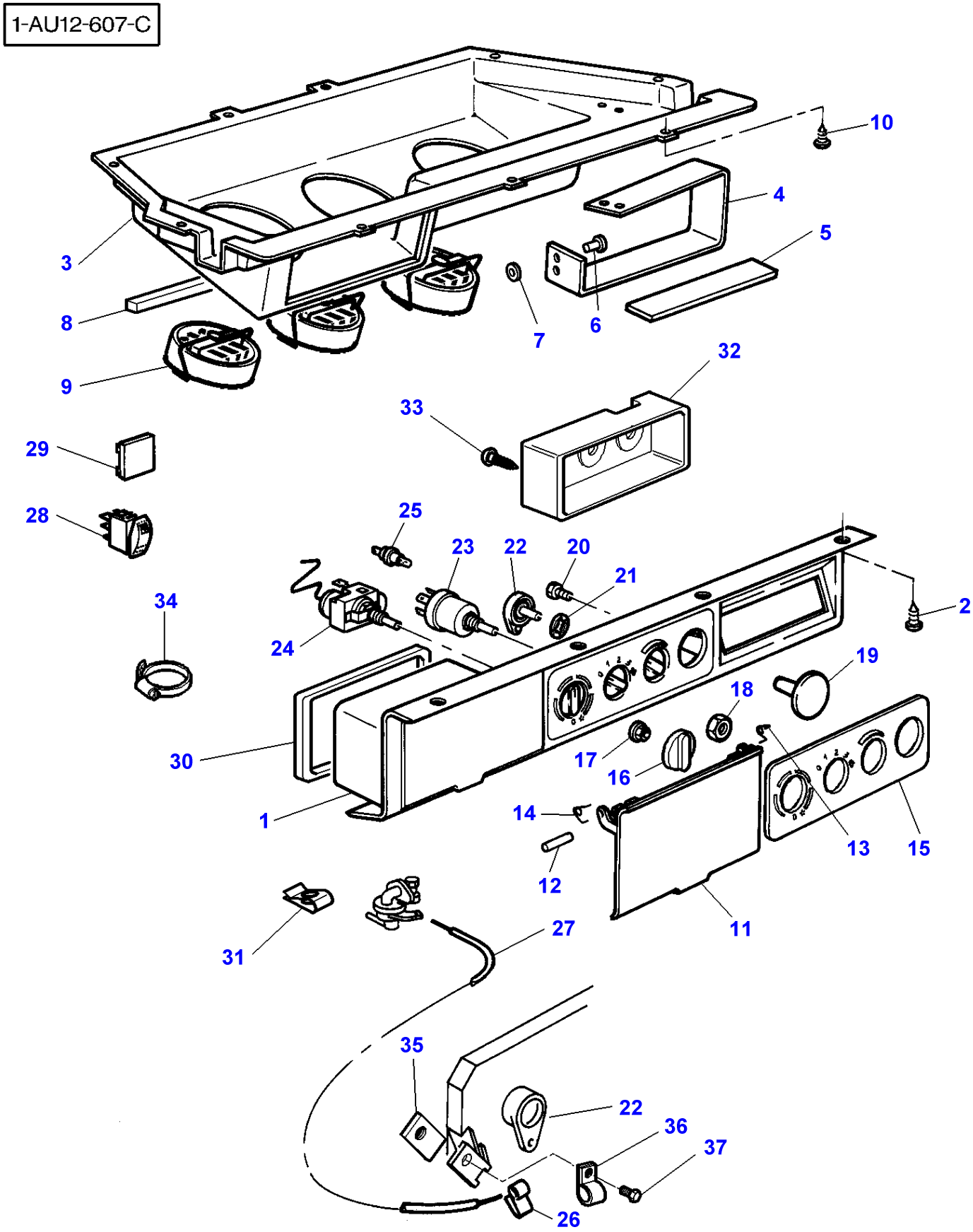
1-AU12-607-C
10
4
5
3
8
9
7
6
32
33
29
28
25
23
22
20
21
2
34
24
19
18
30
17
16
1
14
13
15
12
11
31
27
35
22
36
37
26

| Item | Part Number | Qty | Description | Comments |
|---|---|---|---|---|
| 1 | 3712609M2 | 1 | Control Panel | |
| 2 | 3389854M1 | 6 | Self Tap Screws | N? 10X19 |
| | 373269X1 | 2 | Self Tap Screws | No 10X25 |
| 3 | 3714076M2 | 1 | Boot | |
| 4 | 3714077M1 | 1 | Support | |
| 5 | 3713635M1 | 1 | Gasket | |
| 6 | 3714846M1 | 4 | Rivet | |
| 7 | 339102X1 | 4 | Washer | |
| 8 | 3713744M1 | 1 | Gasket | 10X15X1080MM |
| 9 | 3388030M1 | 3 | Louvre | |
| 10 | 380026X1 | 9 | Screw | Diameter 3.5X16 |
| 11 | 3902214M1 | 1 | Gate | (1) |
| 12 | 3902204M1 | 2 | Clevis Pin | (1) |
| 13 | 3902203M1 | 1 | Spring | (1) |
| 14 | 3902202M1 | 1 | Spring | (1) |
| 15 | 3902299M1 | 1 | Diffusing Lens | (1) |
| 16 | 3902213M1 | 3 | Knob | (1) |
| 17 | 3902217M1 | 1 | Nut | (1) |
| 18 | 3902208M1 | 1 | Nut | (1) |
| 19 | 3902205M1 | 1 | Plug | (1) |
| 20 | 3902218M1 | 1 | Screw | (1)<br>M5X14MM |
| 21 | 3902210M1 | 1 | Washer | (1) |
| 22 | 3902211M1 | 1 | Lever | (1) |
| 23 | 3310871M1 | 1 | Commutator | (1) |
| 24 | 3310669M91 | 1 | Thermostat | (1) |
| 25 | **1427873M1** | 1 | Bulb | (1) |
| 26 | 3902206M1 | 1 | Spring | (1) |
| 27 | 3902212M1 | 1 | Cable | (1) |
| 28 | **3713146M1** | 1 | Switch,Indirect | |
| 29 | 3713151M1 | 1 | Tap | |
| 30 | 3713746M1 | 1 | Gasket | 15X10X480MM |
| 31 | 3389351M1 | 6 | Nut | No 10 |
| | 3389250M1 | 3 | Nut | M5 |
| 32 | 3902591M2 | 1 | Cover | (1) |
| 33 | 365916X1 | 4 | Self Tap Screws | (1) |
| 34 | 3000483X1 | 2 | Clamp | |
| 35 | 3782904M1 | 1 | Plate | From Serial or Engine Number H034012<br>Up to Serial or Engine Number H125001 |
| 36 | 3782903M1 | 1 | Clip | From Serial or Engine Number H034012<br>Up to Serial or Engine Number H125001 |
| 37 | 3008179X1 | 1 | Screw Metric | M4X10<br>From Serial or Engine Number H034012<br>Up to Serial or Engine Number H125001 |

1-AU24-602-A

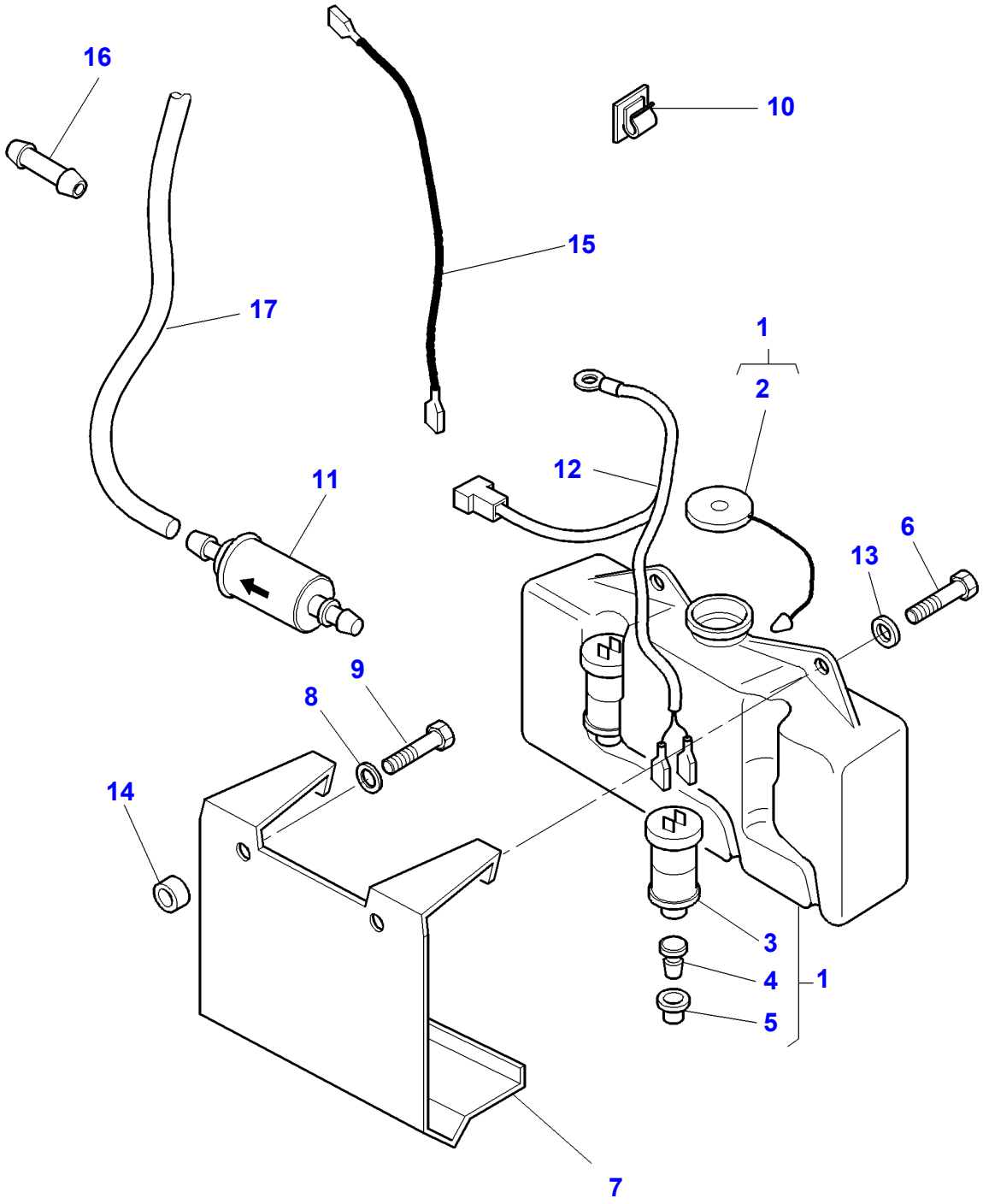

| Item | Part Number | Qty | Description | Comments |
|---|---|---|---|---|
| 1 | 3582444M91 | 1 | Tank | |
| 2 | 3106496M1 | 1 | Plug | (1) |
| 3 | 3582441M1 | 1 | Water Pump | (1) |
| 4 | 3582442M1 | 1 | Plug | (1) |
| 5 | 3582443M1 | 1 | Gasket | (1) |
| 6 | 339124X1 | 2 | Hex. Sock. Screw | M8X16 |
| 7 | 3778973M1 | 1 | Support | |
| 8 | 390972X1 | 2 | Washer Metric | |
| 9 | 339009X1 | 2 | Hex. Sock. Screw | M8X35 |
| 10 | 3760697M1 | 2 | Tie | |
| 11 | 3583086M1 | 1 | Pressure Valve | |
| 12 | 5015261M1 | 1 | Harness | |
| 13 | 391039X1 | 2 | Washer Metric | |
| 14 | 3052946M1 | 2 | Spacer | |
| 15 | 3777527M1 | 1 | Wire | |
| 16 | 3715074M1 | 1 | Union | |
| 17 | 3580902M1 | X | Hose | |

1-AU23-600-C

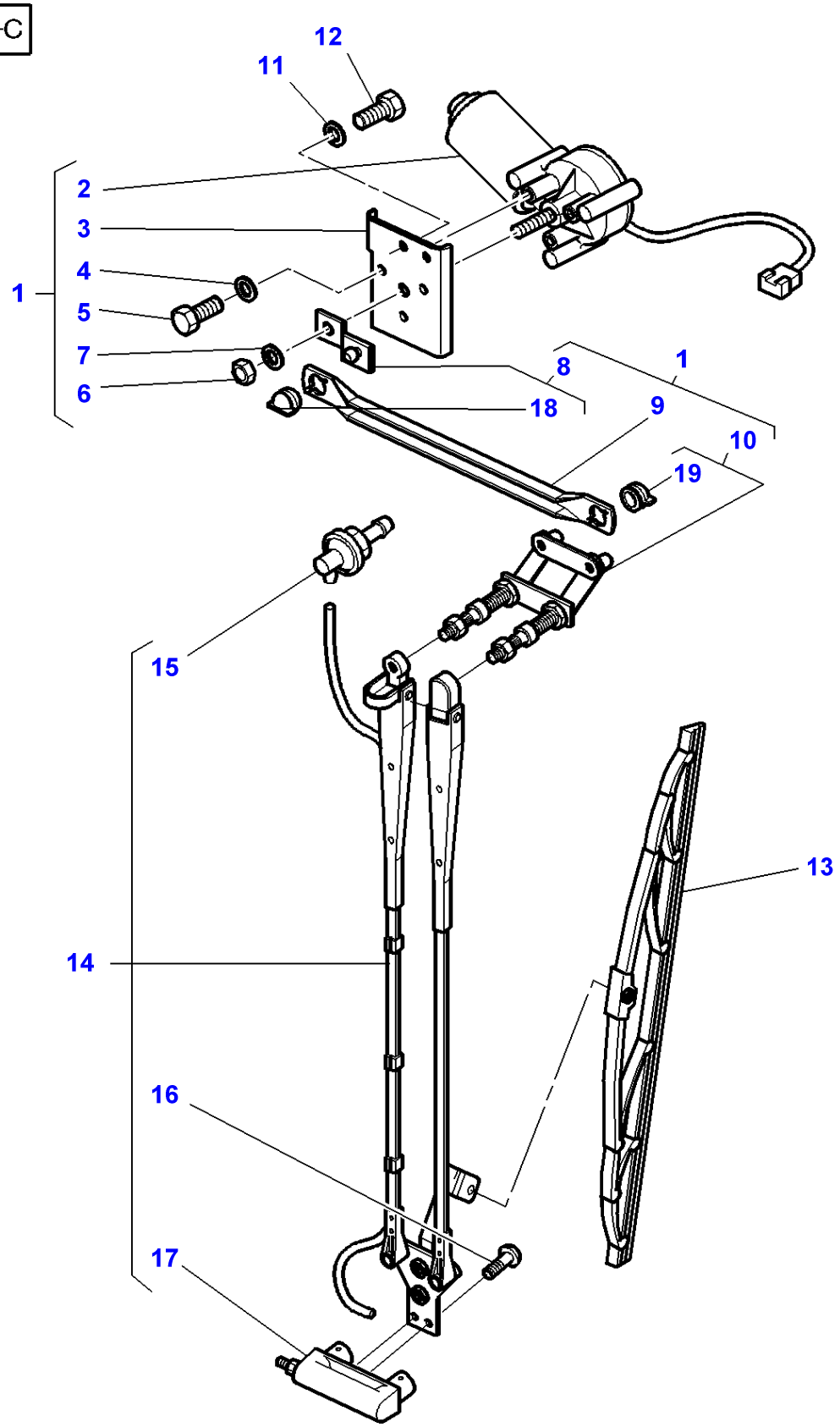

| Item | Part Number | Qty | Description | Comments |
|---|---|---|---|---|
| 1 | 3777005M2 | 1 | Wiper Motor | |
| 2 | 3777698M92 | 1 | Wiper Motor | (1)<br>Replace and repair. Old not interchangeable with new 3902337M2 |
| 3 | 3902338M1 | 1 | Support | (1) |
| 4 | 391289X1 | 3 | Lock Washer | (1) |
| 5 | 339560X1 | 3 | Hex. Sock. Screw | (1) |
| 6 | 339169X1 | 1 | Nut | (1) |
| 7 | 3008914X1 | 1 | Tab Washer | (1) |
| 8 | 3902341M1 | 1 | Crank | (1) |
| 9 | 3902340M1 | 1 | Conrod | (1) |
| 10 | 3902339M92 | 1 | Clevis Pin | (1) |
| 11 | 390972X1 | 2 | Washer Metric | |
| 12 | 339124X1 | 2 | Hex. Sock. Screw | |
| 13 | **3714194M1** | 1 | Wiper Blade | |
| 14 | 3715612M1 | 1 | Arm | |
| 15 | 3902342M1 | 1 | Union | (14) |
| 16 | 3902460M1 | 2 | Screw | (14) |
| 17 | 3902343M1 | 1 | Jet | (14) |
| 18 | | 1 | Nut | (8)<br>Not serviced,order REF 8 |
| 19 | | 1 | Nut | (10)<br>Not serviced,order REF 10 |

**FOOTNOTE [A]** WITH WINDSHIELD WIPER SIDE RIGHT
**FOOTNOTE [B]** WITH WINDSHIELD WIPER SIDE LEFT

1-AU25-601-A

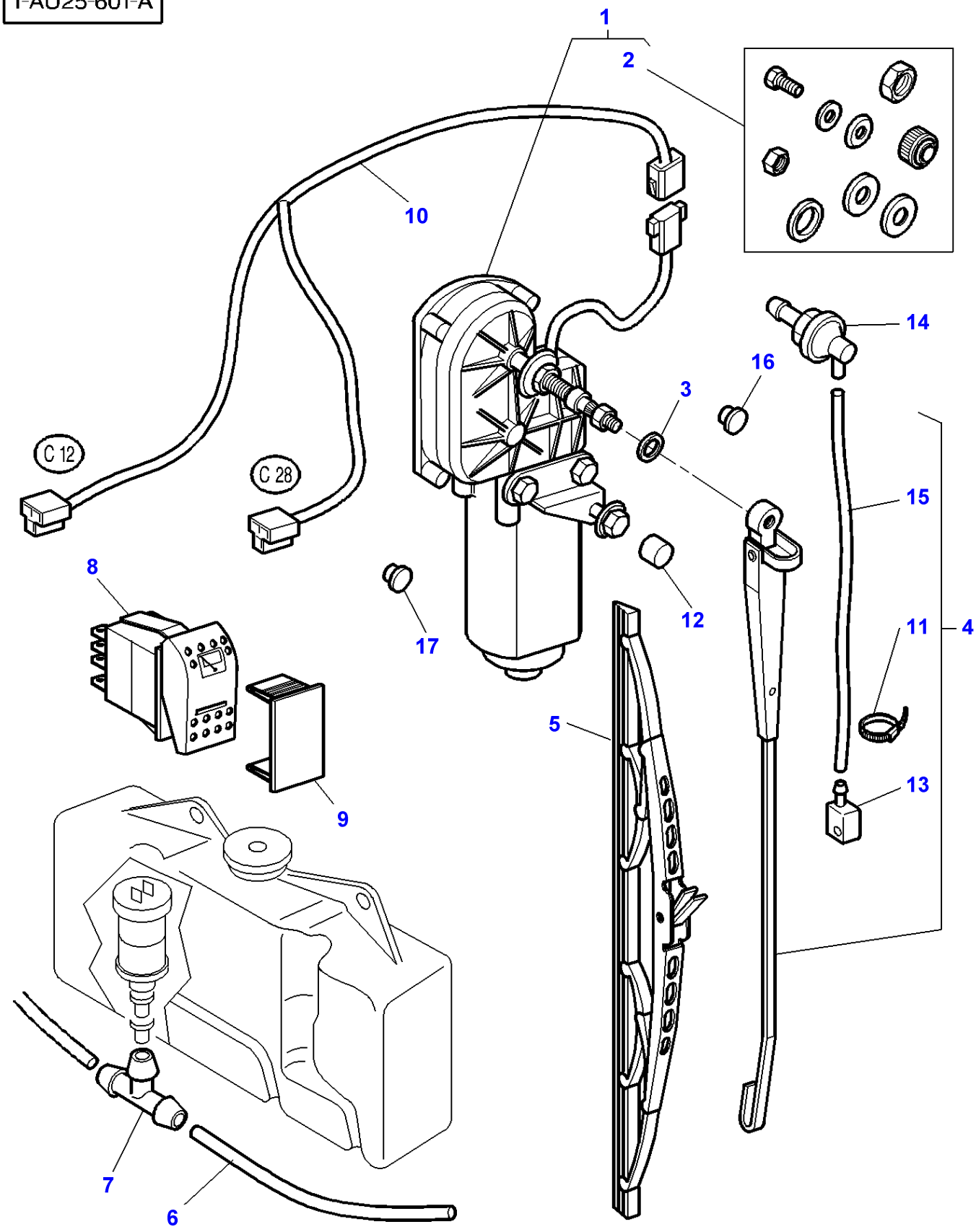

| Item | Part Number | Qty | Description | Comments |
|---|---|---|---|---|
| 1 | 3715610M1 | 1 | Engine | |
| 2 | 3902580M91 | 1 | Parts Pack | (1) |
| 3 | 3582643M1 | 1 | Washer | |
| 4 | 3713196M2 | 1 | Wiper Arm | |
| 5 | **3713195M1** | 1 | Wiper Blade | |
| 6 | 3714119M1 | 1 | Tube | Length 1300MM |
| | 3714118M1 | 1 | Tube | Length 200MM |
| | 3714120M2 | 1 | Tube | Length 2800MM |
| 7 | 3583069M1 | 1 | Teepiece | |
| 8 | **3713147M1** | 1 | Switch,Indirect | |
| 9 | 3713151M1 | 1 | Tap | [A] |
| 10 | 3713738M2 | 1 | Harness | |
| 11 | 3902463M1 | 1 | Clamp | (4) |
| 12 | 3616277M1 | 1 | Helmet | |
| 13 | 3902461M1 | 1 | Jet | (4) |
| 14 | 3902342M1 | 1 | Union | |
| 15 | 3902462M1 | 1 | Tube | (4) |
| 16 | 3713741M1 | 1 | Plug | [A]<br>Diameter 17,5MM |
| 17 | 3713742M1 | 1 | Plug | [A]<br>Diameter 9,5MM |

**FOOTNOTE [A]** WITHOUT REAR WIPER AND WASHER WINDSCREEN
**FOOTNOTE [B]** WITH HIGH VISIBILITY ROOF

1-AU28-600-E

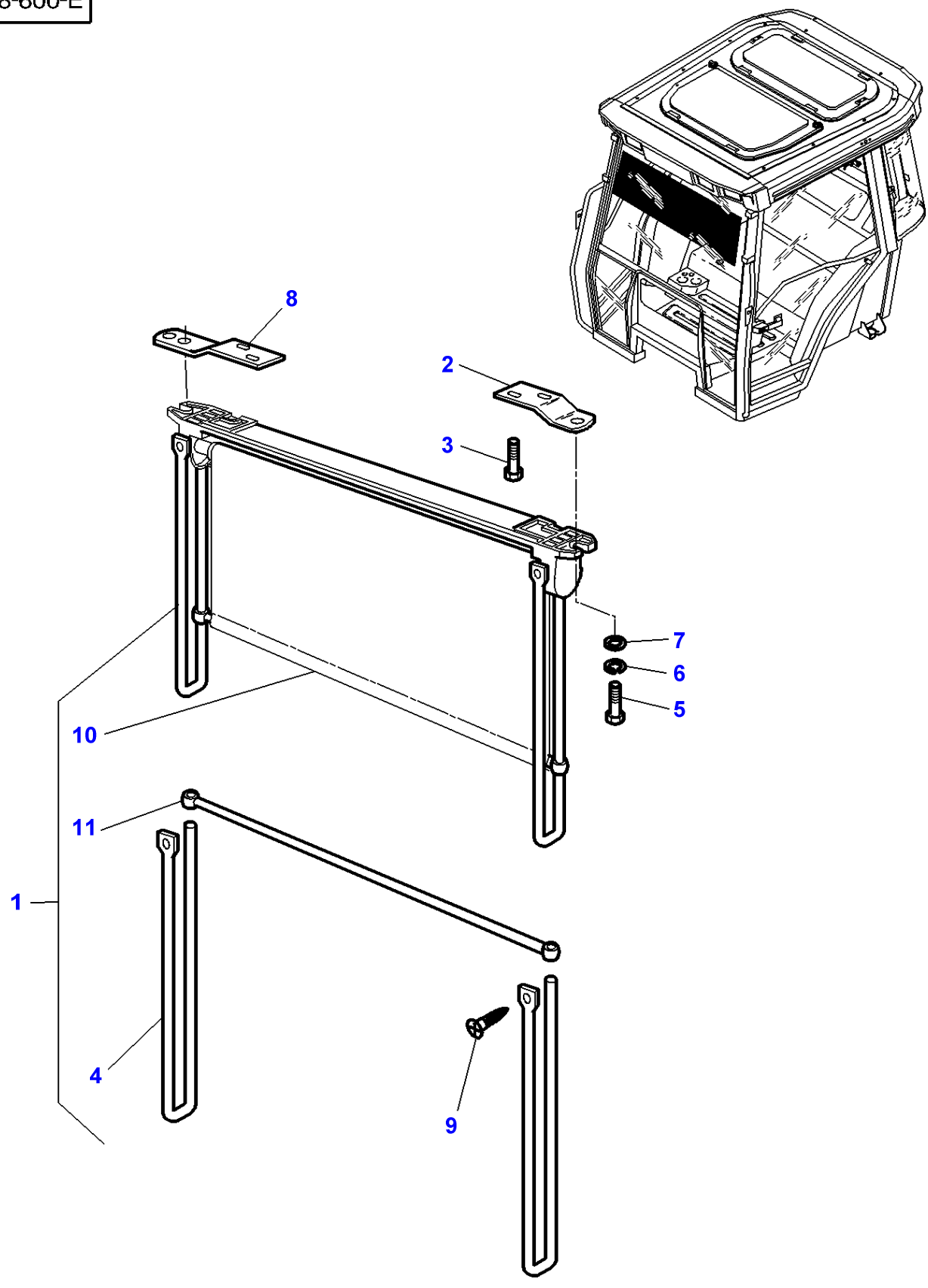

| Item | Part Number | Qty | Description | Comments |
|---|---|---|---|---|
| 1 | 3714072M91 | 1 | Canopy | |
| 2 | 3389750M1 | 1 | Support | Left Hand |
| 3 | 3007934X1 | 4 | Screw Metric | M6X16 |
| 4 | 3902174M91 | 2 | Rod | (1) |
| 5 | 339560X1 | 2 | Hex. Sock. Screw | M6X16 |
| 6 | 339375X1 | 2 | Lock Washer | |
| 7 | 390971X1 | 2 | Washer | |
| 8 | 3389749M1 | 1 | Support | Right Hand |
| 9 | 3389854M1 | 2 | Self Tap Screws | CBZ N10X19 |
| 10 | 3902176M91 | 1 | Panel | (1) |
| 11 | 3902175M91 | 1 | Bar | (1) |

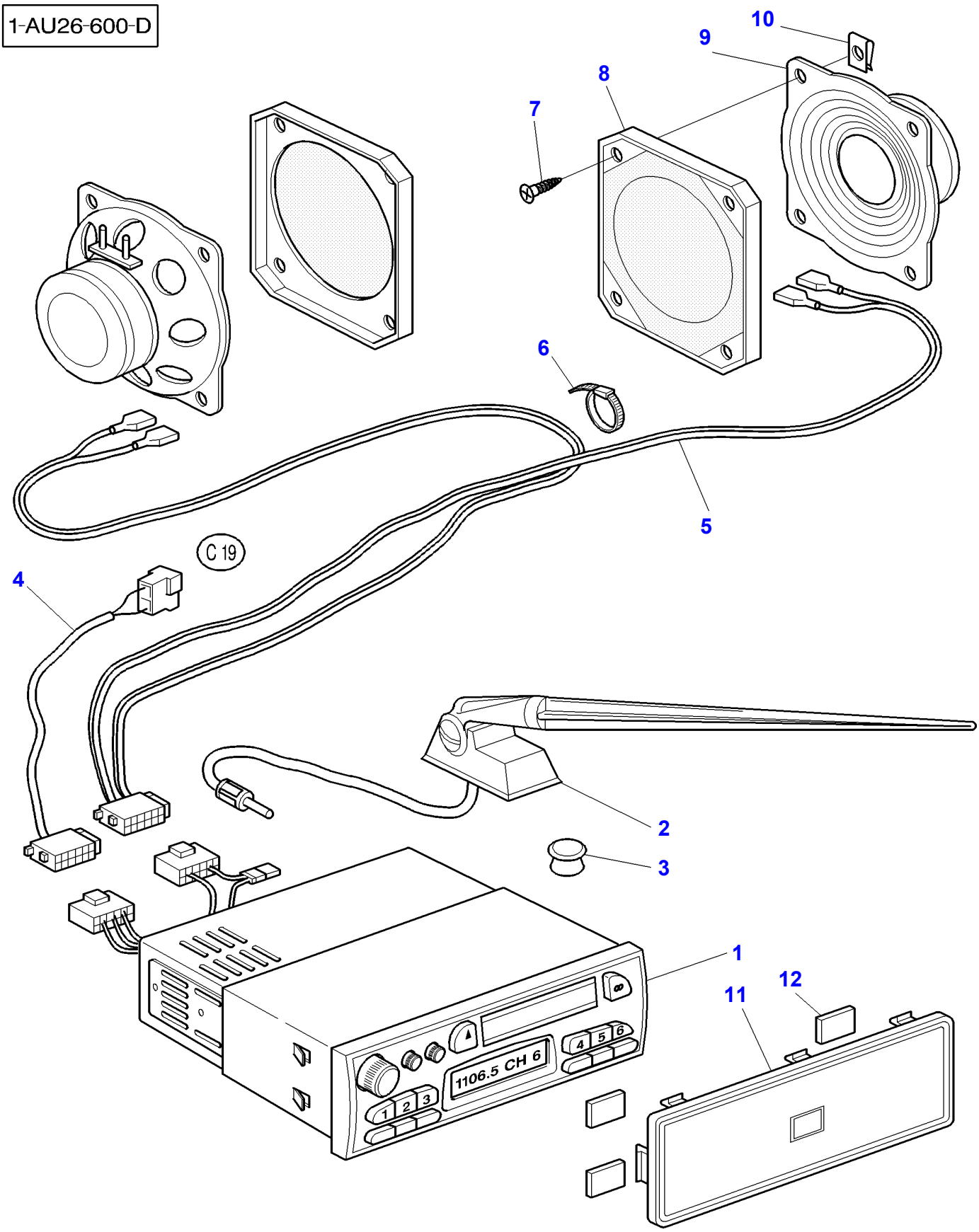
1-AU26-600-D
10
9
8
7
6
5
C 19
4
2
3
1
12
11
1106.5 CH 6
1 2 3
4 5 6

| Item | Part Number | Qty | Description | Comments |
|---|---|---|---|---|
| 1 | 3816384M91 | 1 | Radio Push Butt. | Replace and repair. Old not interchangeable with new 3701956M91 |
| 2 | 3617629M92 | 1 | Top Aerial | |
| 3 | 3041932M1 | 1 | Plug | [A] |
| 4 | 3715099M1 | 1 | Harness | |
| 5 | 3715100M1 | 1 | Harness | |
| 6 | 3619622M1 | 1 | Cable Tie | |
| 7 | 3580257M1 | 8 | Screw | |
| 8 | 3617395M1 | 2 | Grille | |
| 9 | 3617394M1 | 2 | Speaker | |
| 10 | 3715142M1 | 8 | Nut | |
| 11 | 3580173M1 | 1 | Plate | [A] |
| 12 | 3580174M1 | 4 | Gasket | [A] |

**FOOTNOTE [A]** WITHOUT RADIO
**FOOTNOTE [B]** WITH HIGH VISIBILITY ROOF

1-AU18-600-A

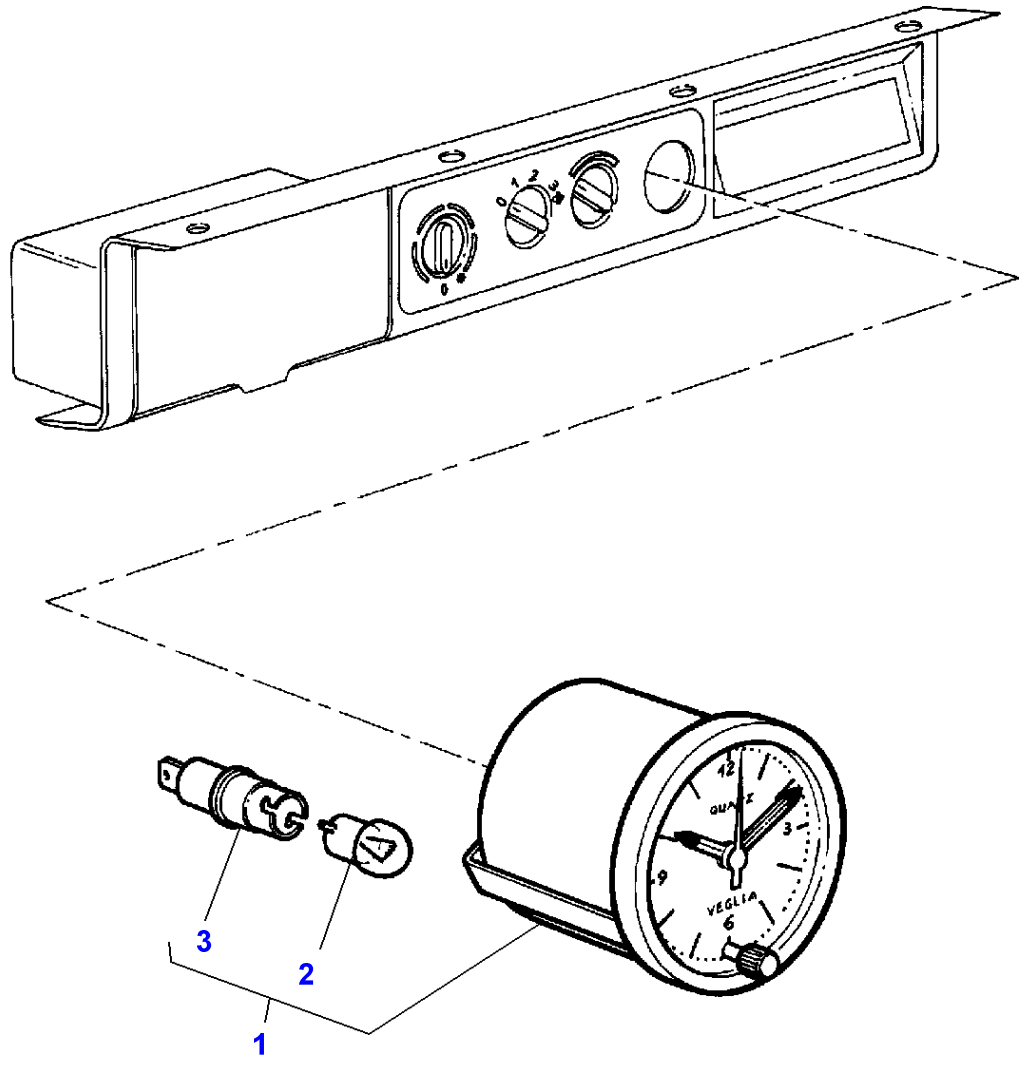

| Item | Part Number | Qty | Description | Comments |
|---|---|---|---|---|
| 1 | 3713364M1 | 1 | Clock | |
| 2 | **963333M1** | 1 | Bulb 12v 5w | (1) |
| 3 | 3902191M1 | 1 | Lamp Socket | (1) |

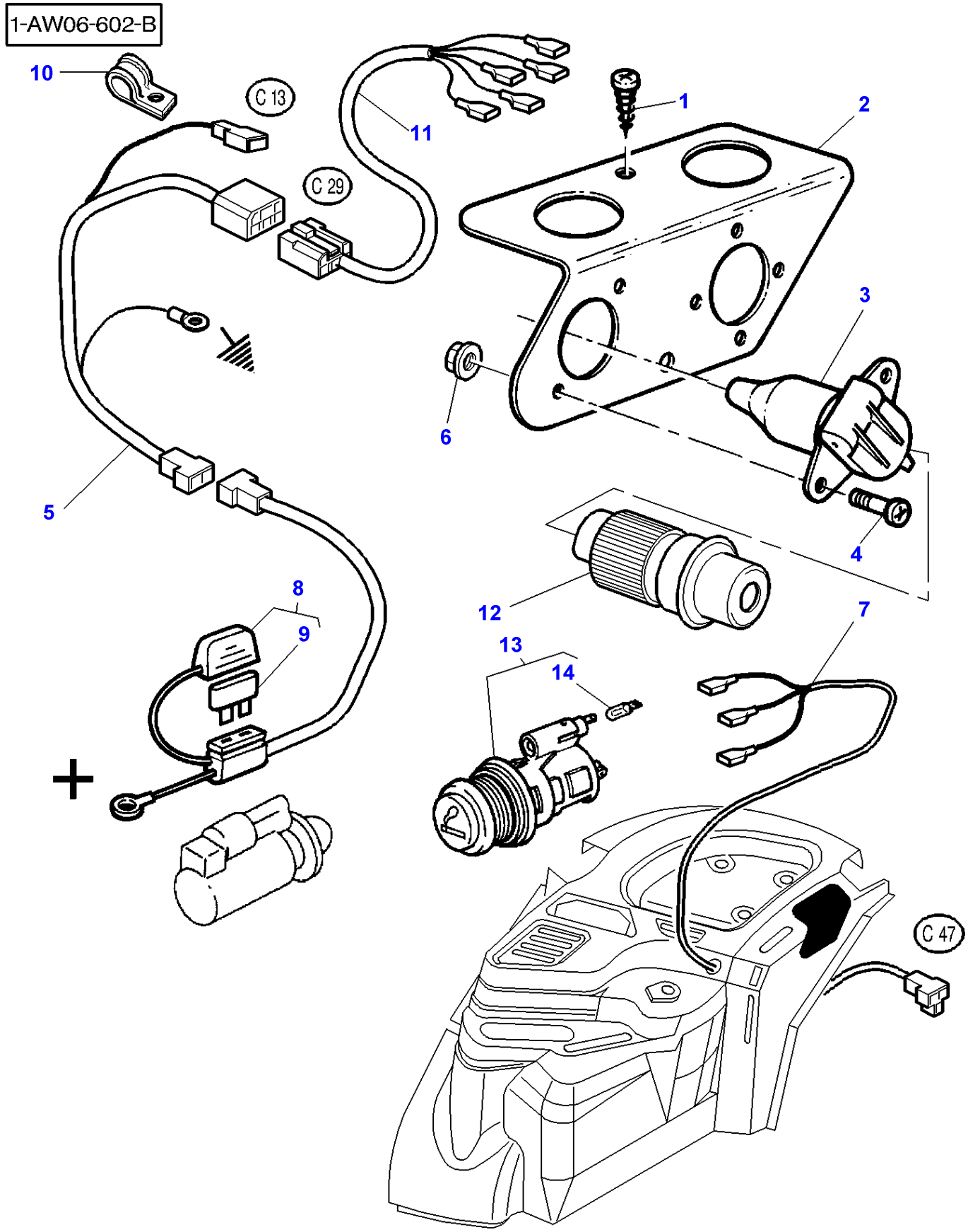
1-AW06-602-B
10
C 13
11
1
2
C 29
3
6
5
4
8
12
7
9
13
14
C 47

| Item | Part Number | Qty | Description | Comments |
|---|---|---|---|---|
| 1 | 3010506X1 | 1 | Screw | M5X16 |
| | 3010578X1 | 1 | Screw | M5X10 |
| 2 | 3713356M1 | 1 | Support | |
| 3 | 3713127M1 | 1 | Electric Socket | |
| 4 | 3000926X1 | 2 | Screw | |
| 5 | 3714515M1 | 1 | Harness | |
| 6 | 3010477X1 | 2 | Nut Metric | |
| 7 | 3714566M1 | 1 | Harness | |
| 8 | 3778938M91 | 1 | Wire | |
| 9 | **3712661M1** | 1 | Fuse | (8)<br>30 AMP |
| 10 | 3387578M1 | 1 | Clamp | |
| 11 | 3714516M1 | 1 | Harness | |
| 12 | **3760032M1** | 1 | Electrical Plug | |
| 13 | 3617848M91 | 1 | Lighter | |
| 14 | **3405185M1** | 1 | Bulb 12v 1.2w | (13) |

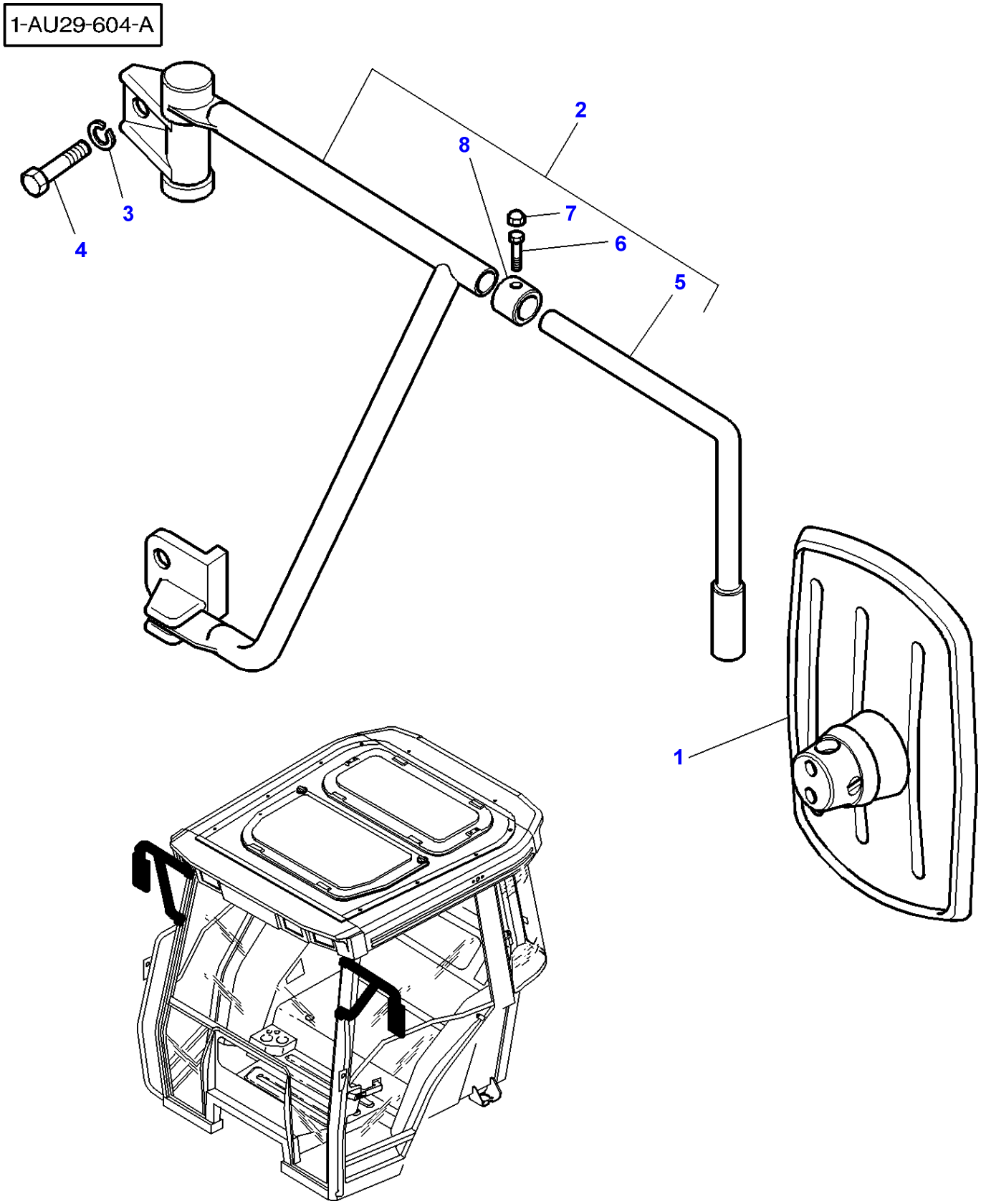
1-AU29-604-A
1
2
3
4
5
6
7
8

| Item | Part Number | Qty | Description | Comments |
|---|---|---|---|---|
| 1 | 3806615M91 | 1 | Mirror | |
| 2 | 3806612M91 | 1 | Arm | Left Hand |
| | 3806613M91 | 1 | Arm | Right Hand |
| 3 | 385361X1 | 4 | Washer | |
| 4 | 339123X1 | 4 | Hex. Sock. Screw | |
| 5 | 3902610M1 | 1 | Stem | (2) |
| 6 | 339228X1 | 1 | Screw Metric | (2) |
| 7 | 3616277M1 | 1 | Helmet | (2) |
| 8 | 3902611M1 | 1 | Sleeve | (2) |

1-AU30-601-A

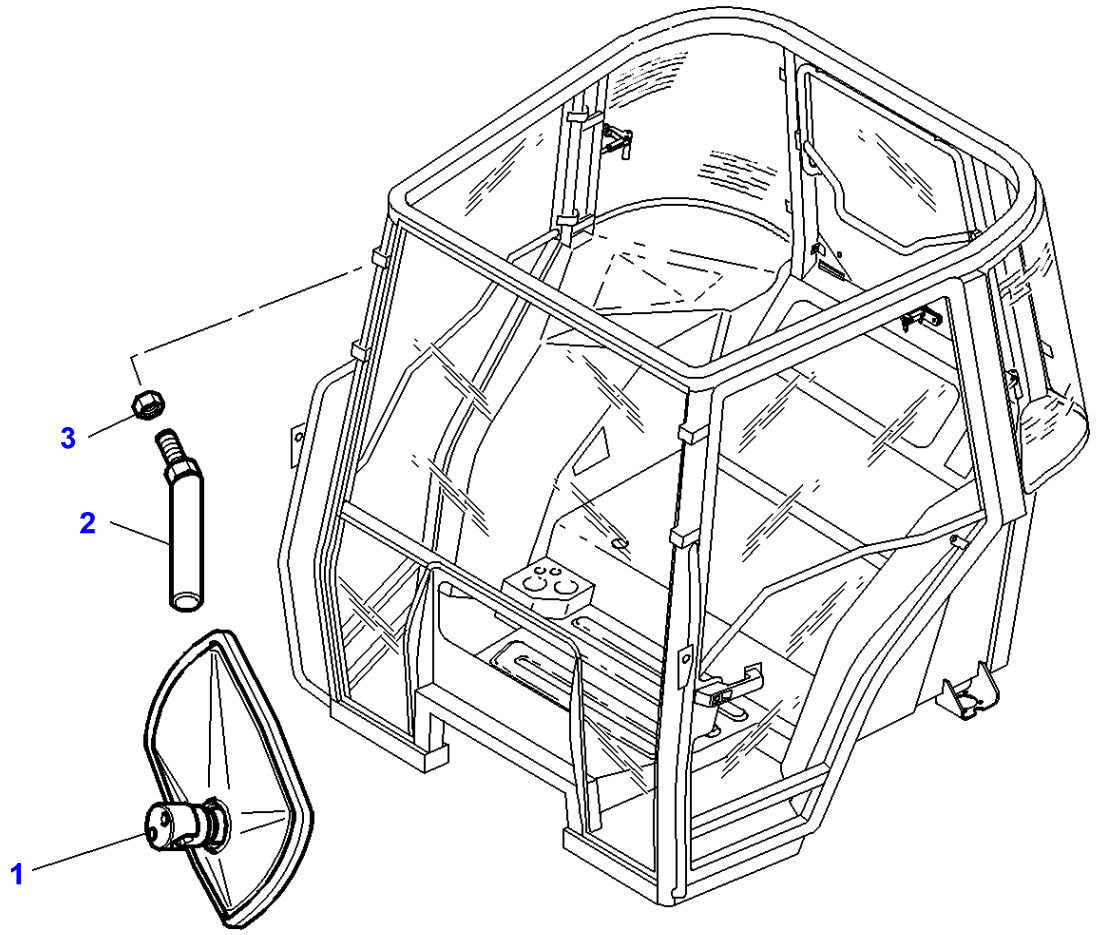

| Item | Part Number | Qty | Description | Comments |
|---|---|---|---|---|
| 1 | 3806618M91 | 1 | Mirror | |
| 2 | 3778091M1 | 1 | Clevis Pin | Replace and repair. Old not interchangeable with new 3713999M1 |
| 3 | 3009693X1 | 1 | Nut Metric | M10 |

1-AV07-608-A

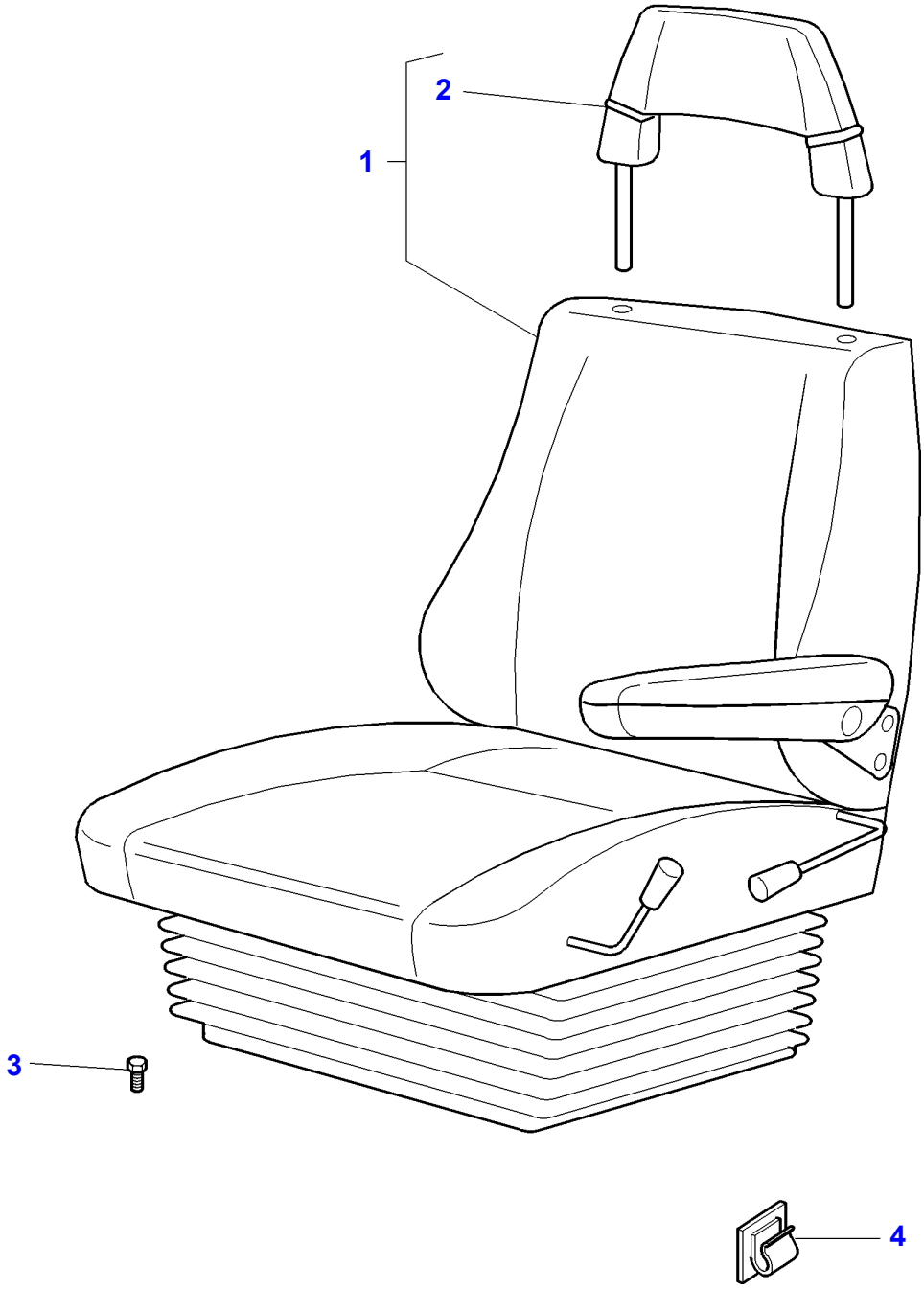

| Item | Part Number | Qty | Description | Comments |
|---|---|---|---|---|
| 1 | 3778462M91 | 1 | Seat | See Page - Reference Number 110-0150 |
| 2 | 3712877M1 | 1 | Head Rest | |
| 3 | 339123X1 | 4 | Hex. Sock. Screw | 8X20MM |
| 4 | 3583514M1 | 1 | Strap | |

1-AV07-606-B

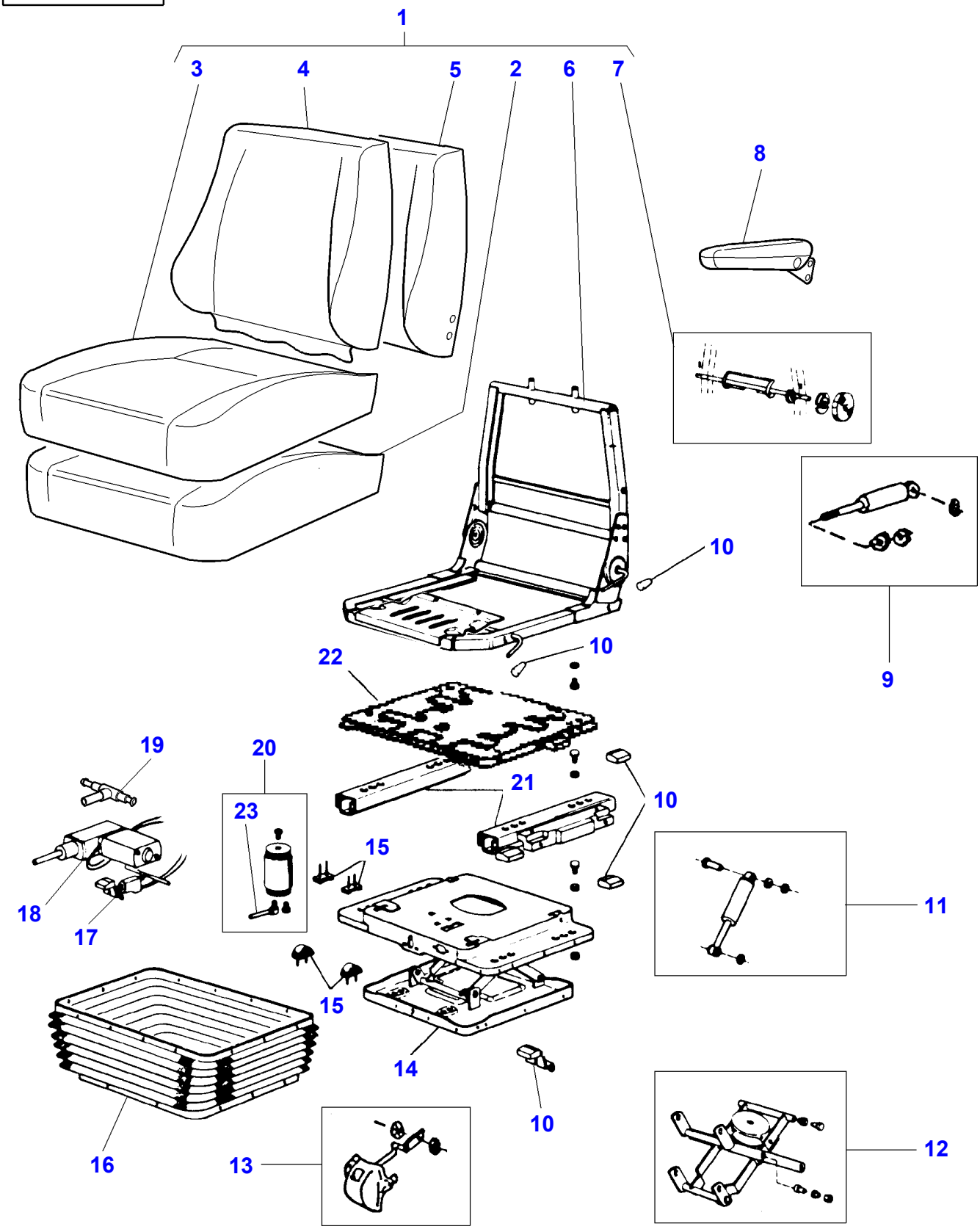

| Item | Part Number | Qty | Description | Comments |
|---|---|---|---|---|
| 1 | 3902880M91 | 1 | Seat | |
| 2 | 3902179M91 | 1 | Facing | (1) |
| 3 | 3902160M91 | 1 | Seat Cover | (1) |
| 4 | 3902166M91 | 1 | Seat Cover | (1) |
| 5 | 3902165M91 | 1 | Facing | (1) |
| 6 | | 1 | Frame | (1) Not serviced,order REF No 1 |
| 7 | 3902158M91 | 1 | Kit, Repair | (1) |
| 8 | 3902803M91 | 1 | Kit, Armrest | |
| 9 | 3902663M91 | 1 | Kit, Repair | |
| 10 | 3902157M91 | 1 | Kit, Repair | |
| 11 | 3902184M91 | 1 | Kit, Repair | |
| 12 | 3902187M91 | 1 | Kit, Repair | |
| 13 | 3902664M91 | 1 | Parts Pack | |
| 14 | 3902186M91 | 1 | Suspension | |
| 15 | 3902173M91 | 1 | Kit, Stop | |
| 16 | 3902185M91 | 1 | Bellows | |
| 17 | 3902640M91 | 1 | Kit, Valve | |
| 18 | 3901538M91 | 1 | Kit, Compressor | |
| 19 | 3902501M91 | 1 | Parts Pack | |
| 20 | 3902182M91 | 1 | Kit, Repair | |
| 21 | 3902172M92 | 1 | Kit, Guide | |
| 22 | 3902805M91 | 1 | Plate | |
| 23 | 3902957M1 | 1 | Elbow | (20) |

1-AV01-528-A

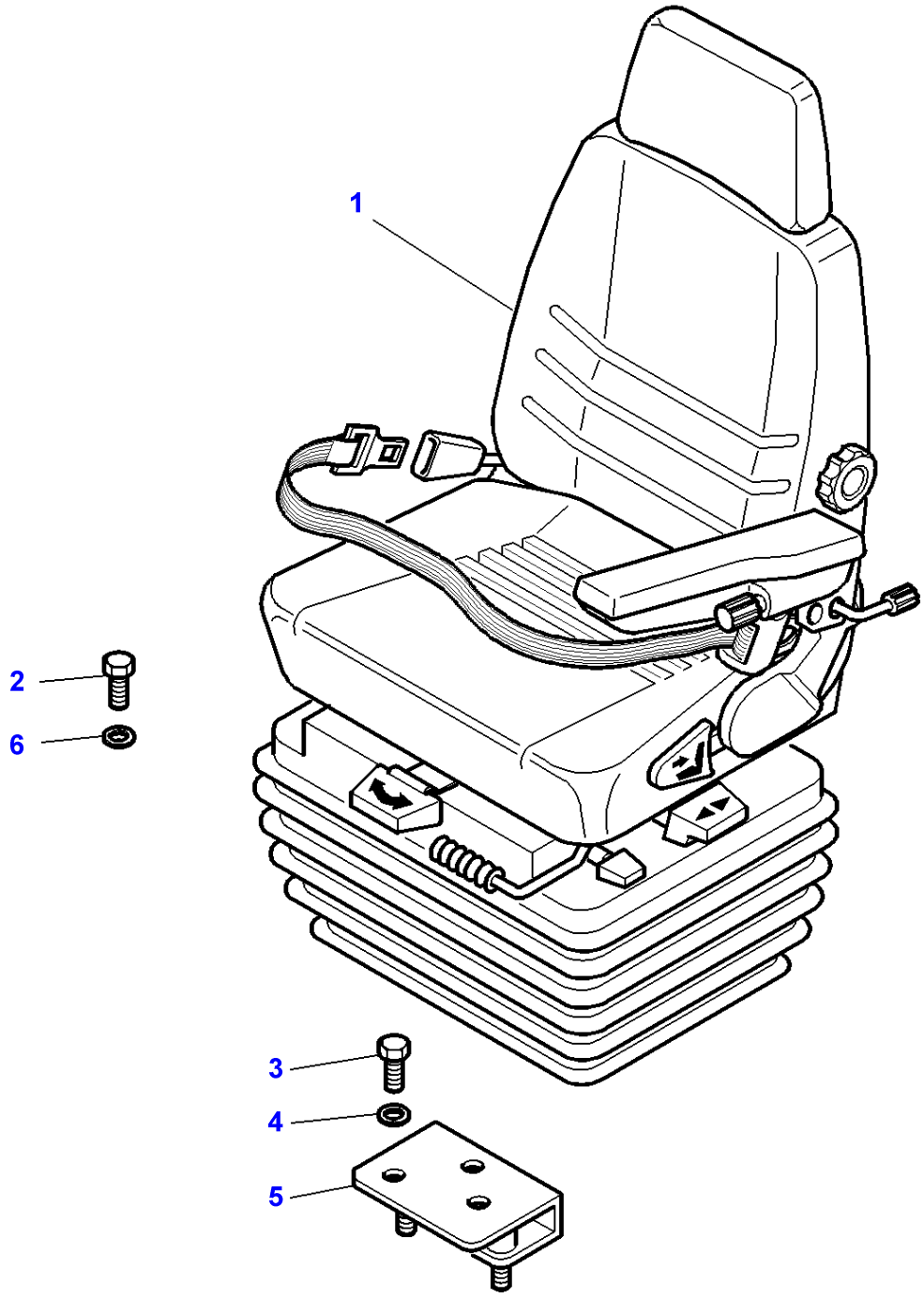

| Item | Part Number | Qty | Description | Comments |
|---|---|---|---|---|
| 1 | 3779611M91 | 1 | Seat | [B]<br>See Page - Reference Number 110-0160/1<br>See Page - Reference Number 110-0165/1<br>RED |
| 2 | 391989X1 | 4 | Screw Metric | M8x20 |
| | 1441000X1 | 4 | Screw Metric | M8x16 |
| 3 | 339124X1 | 3 | Hex. Sock. Screw | M8x16 |
| 4 | 390972X1 | 3 | Washer Metric | M8 |
| 5 | 3780410M1 | 1 | Plate | |
| 6 | 390972X1 | 4 | Washer Metric | M8 |

**FOOTNOTE [A]** WITH MANUAL ADJUSTMENT
**FOOTNOTE [B]** WITH AUTOMATIC ADJUSTMENT
**FOOTNOTE [C]** FOR CAB 5016850 & 5016851 (MF)
**FOOTNOTE [D]** FOR CAB 5016524 / 525 / 526 / 527

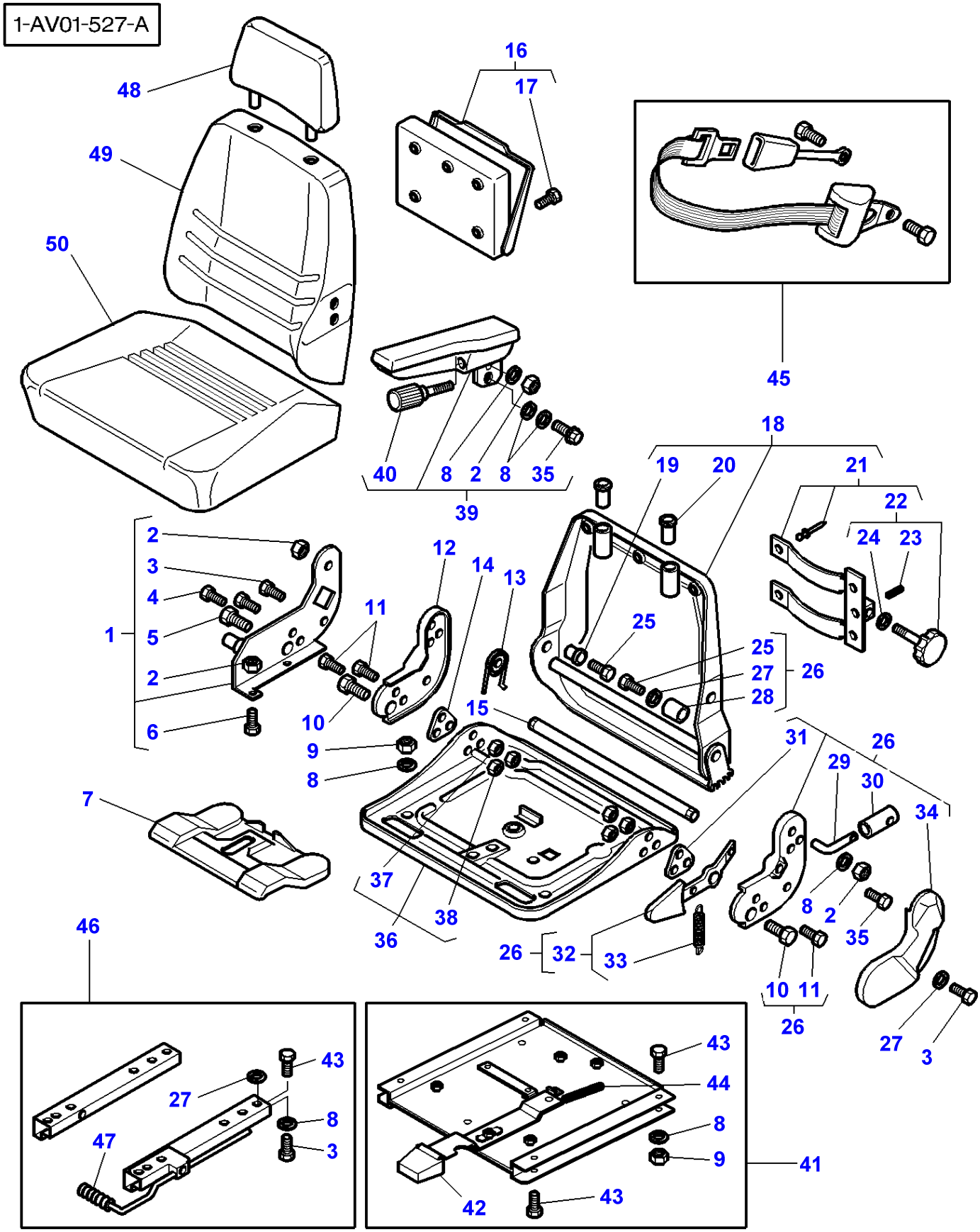
1-AV01-527-A
48
49
50
16
17
45
40
8
2
8
35
39
18
19
20
21
22
24
23
2
3
4
5
2
6
1
12
11
10
14
13
15
9
8
25
25
27
28
26
7
37
38
36
31
26
29
30
34
8
2
35
26
32
33
10
11
26
27
3
46
43
27
8
47
3
43
44
8
9
41
42
43

| Item | Part Number | Qty | Description | Comments |
|---|---|---|---|---|
| 1 | 3903086M91 | 1 | Support | |
| 2 | 1441461X1 | 3 | Locknut | M8 |
| 3 | 391148X1 | 3 | Screw | M8x20 |
| 4 | 1440349X1 | 2 | Screw Metric | M8x30 |
| 5 | 3903094M1 | 1 | Screw | Diameter 7/16"-20<br>Length 35 MM |
| 6 | 3009439X1 | 1 | Screw | M8x16 |
| 7 | 3903084M91 | 1 | Driven Plate | |
| 8 | 390972X1 | 11 | Washer Metric | Diameter 8 MM |
| 9 | 339169X1 | 4 | Nut | M8 |
| 10 | 353561X1 | 2 | Screw Unf | Diameter 7/16"-20<br>Length 30 MM |
| 11 | 391990X1 | 4 | Screw | M8x25 |
| 12 | 3105795M1 | 1 | Support | |
| 13 | 3105793M1 | 1 | Spring | |
| 14 | 3903073M1 | 1 | Plate | |
| 15 | 3903074M1 | 1 | Tube | |
| 16 | 3903085M91 | 1 | Pocket | |
| 17 | 3903093M1 | 4 | Screw | Diameter 4 MM |
| 18 | 3903070M91 | 1 | Frame | |
| 19 | 3903075M1 | 1 | Insert | |
| 20 | 3101494M1 | 2 | Bush | |
| 21 | 3903071M91 | 1 | Support | |
| 22 | 3903072M91 | 1 | Stem | |
| 23 | 3009322X1 | 1 | Spirol Pin | Diameter 3 MM<br>Length 18 MM |
| 24 | 1444351X1 | 1 | Washer | Diameter 13 MM |
| 25 | 339287X1 | 2 | Screw Metric | M8x35 |
| 26 | 3903079M91 | 1 | Driven Plate | |
| 27 | 391039X1 | 5 | Washer Metric | Diameter 8 MM |
| 28 | 3903076M1 | 1 | Tube | |
| 29 | 3903080M1 | 1 | Lever | |
| 30 | 3903081M1 | 1 | Handle | |
| 31 | 3903077M1 | 1 | Plate | |
| 32 | 3903078M91 | 1 | Lever | |
| 33 | 3105797M1 | 1 | Spring | |
| 34 | 3903082M1 | 1 | Housing | |
| 35 | 3101996M1 | 1 | Screw Special | M8x16 |
| 36 | 3903083M91 | 1 | Frame | |
| 37 | 339169X1 | 4 | Nut | M8 |
| 38 | 353428X1 | 2 | Nut Unf | Diameter 7/16"-20 |
| 39 | 3903099M91 | 1 | Armrest | |
| 40 | 3903098M1 | 1 | Stem | |
| 41 | 3903100M91 | 1 | Plate | |
| 42 | 3903102M1 | 1 | Handle | |
| 43 | 1441000X1 | 12 | Screw Metric | M8x16 |
| 44 | 3903101M1 | 1 | Spring | |
| 45 | 3903092M1 | 1 | Safety Belt | |
| 46 | 3903088M91 | 1 | Kit, Guide | |
| 47 | 3903087M1 | 1 | Handle | |
| 48 | 3779612M1 | 1 | Head Rest | RED |
| 49 | 3903118M1 | 1 | Cushion | RED |
| 50 | 3903117M1 | 1 | Cushion | RED |

**FOOTNOTE [A]** FOR CAB 5016850 & 5016851 (MF)
**FOOTNOTE [B]** FOR CAB 5016524 / 525 / 526 / 527

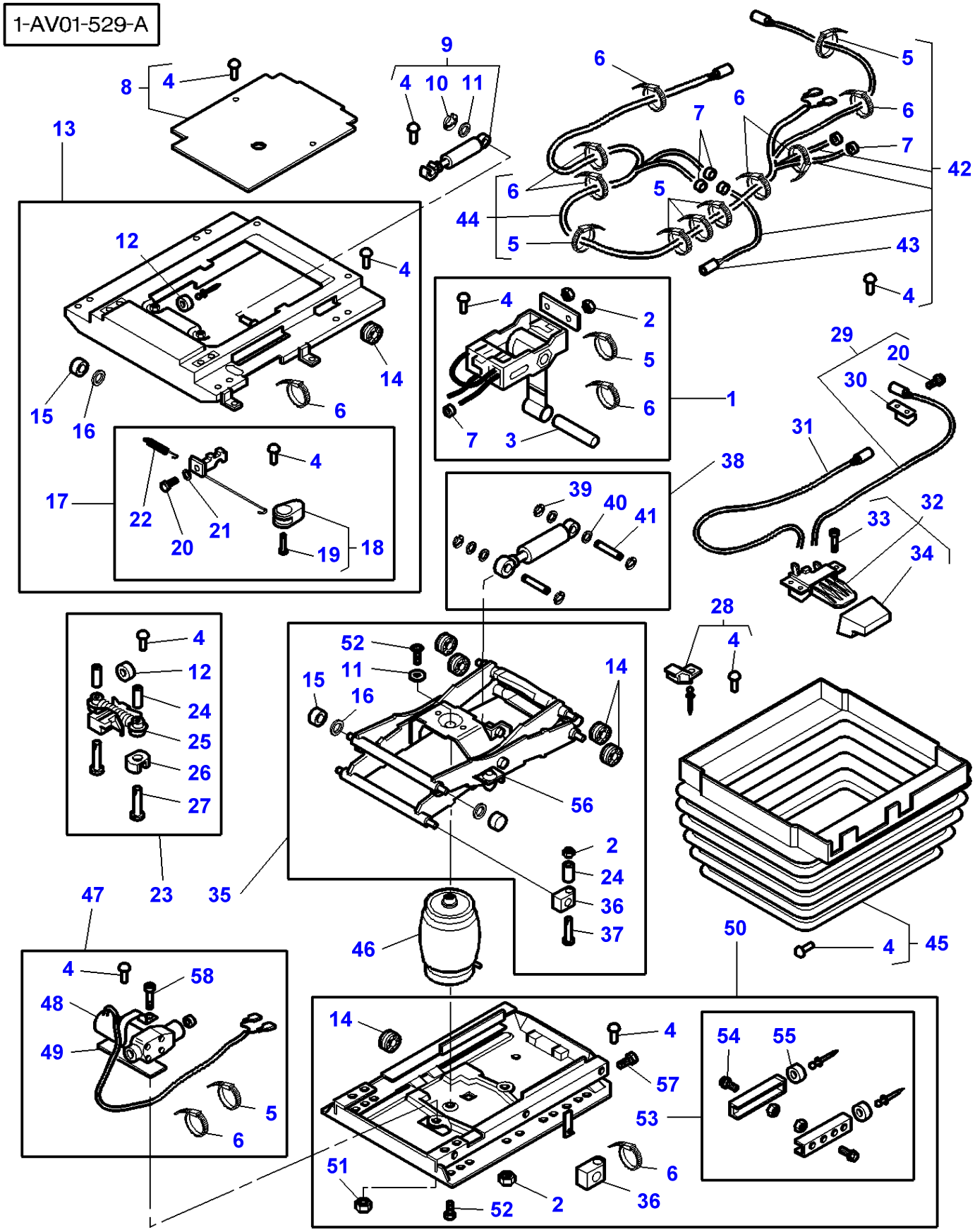
1-AV01-529-A
8
4
9
4
10
11
13
6
5
6
7
6
6
7
42
5
44
5
43
4
12
4
14
6
15
16
4
2
5
6
1
7
3
29
20
30
31
38
39
40
41
32
33
34
17
4
22
20
21
19
18
28
4
4
12
24
25
26
27
23
52
11
15
16
14
56
35
2
24
36
37
46
47
50
4
45
4
58
48
49
5
6
14
4
57
53
54
55
51
52
2
6
36

| Item | Part Number | Qty | Description | Comments |
|---|---|---|---|---|
| 1 | 3903129M91 | 1 | Lever | |
| 2 | 1441461X1 | 4 | Locknut | M8 |
| 3 | 3903130M1 | 1 | Clevis Pin | |
| 4 | 1719896M1 | 24 | Plug | |
| 5 | 3903068M1 | 4 | Tie | 4,7x204 MM |
| 6 | 3105397M1 | 5 | Cable Clamp | 2,5x102 MM |
| 7 | 3903052M1 | 4 | Olive | |
| 8 | 3903037M91 | 1 | Housing | |
| 9 | 3903039M91 | 1 | Shock Absorber | Replace and repair. Old not interchangeable with new 3903131M91 |
| 10 | 1441206X1 | 1 | Lock Washer | Diameter 6 MM |
| 11 | 390972X1 | 2 | Washer Metric | Diameter 8,4 MM |
| 12 | 3903040M1 | 1 | Buffer | |
| 13 | 3903132M91 | 1 | Suspension | |
| 14 | 3903050M1 | 4 | Roller | |
| 15 | 3105382M1 | 2 | Bearing Needle | |
| 16 | 3903048M1 | 2 | Ring | |
| 17 | 3903045M91 | 1 | Rod Link | |
| 18 | 3903180M91 | 1 | Handle | Replace and repair. Old not interchangeable with new 3903134M91 |
| 19 | 3903065M1 | 1 | Screw | 4x14 |
| 20 | 3903064M1 | 2 | Screw | 3,5x12 MM |
| 21 | 339362X1 | 1 | Washer | Diameter 4,3 MM |
| 22 | 3903044M1 | 2 | Spring | |
| 23 | 3903032M91 | 1 | Shock Absorber | |
| 24 | 3105404M1 | 4 | Tube | |
| 25 | 3903033M1 | 2 | Insert | |
| 26 | 3903034M1 | 2 | Buffer | |
| 27 | 339287X1 | 2 | Screw Metric | M8x35 |
| 28 | 3903036M1 | 2 | Stop | |
| 29 | 3903138M91 | 1 | Cable | |
| 30 | 3903136M1 | 1 | Support | |
| 31 | 3903137M91 | 1 | Cable | |
| 32 | 3903043M91 | 1 | Selector | |
| 33 | 3903063M1 | 3 | Screw | M5x16 |
| 34 | 3903042M1 | 1 | Handle | |
| 35 | 3903047M91 | 1 | Suspension | |
| 36 | 3903049M1 | 2 | Bearing Carrier | |
| 37 | 3903066M1 | 2 | Screw | |
| 38 | 3903058M91 | 1 | Shock Absorber | |
| 39 | 390287X1 | 4 | Lock Washer | |
| 40 | 3101663M1 | 4 | Washer | |
| 41 | 3903035M1 | 2 | Clevis Pin | |
| 42 | 3903141M91 | 1 | Hydr Hose | |
| 43 | 3105395M1 | 2 | Hose Clip | |
| 44 | 3903140M91 | 1 | Cable | |
| 45 | 3903139M91 | 1 | Bellows | |
| 46 | 3903051M91 | 1 | Accumulator | |
| 47 | 3903057M91 | 1 | Compressor | |
| 48 | 3903053M1 | 1 | Clamp | |
| 49 | 3903054M1 | 1 | Plate | |
| 50 | 3903059M91 | 1 | Fit Plate Seat | |
| 51 | 339169X1 | 1 | Nut | M8 |
| 52 | 3903067M1 | 2 | Screw | M8x20 |
| 53 | 3903062M1 | 1 | Stop | |
| 54 | 3101996M1 | 2 | Screw Special | M8x16 |
| 55 | 3102401M1 | 2 | Buffer | |
| 56 | 1719867M1 | 2 | Protector | |
| 57 | 3000926X1 | 1 | Screw | M5x10 |
| 58 | 3001414X1 | 1 | Screw Metric | M8x12 |
| 59 | 3903135M91 | 1 | Kit, Repair | [A,B] |

**FOOTNOTE [A]** INCLUDE ITEM 2/4/5/6/11/12/14/15/16/24/25/ 26/36/51/52/53/56/58
**FOOTNOTE [B]** NOT ILLUSTRATED

1-AV03-602-B

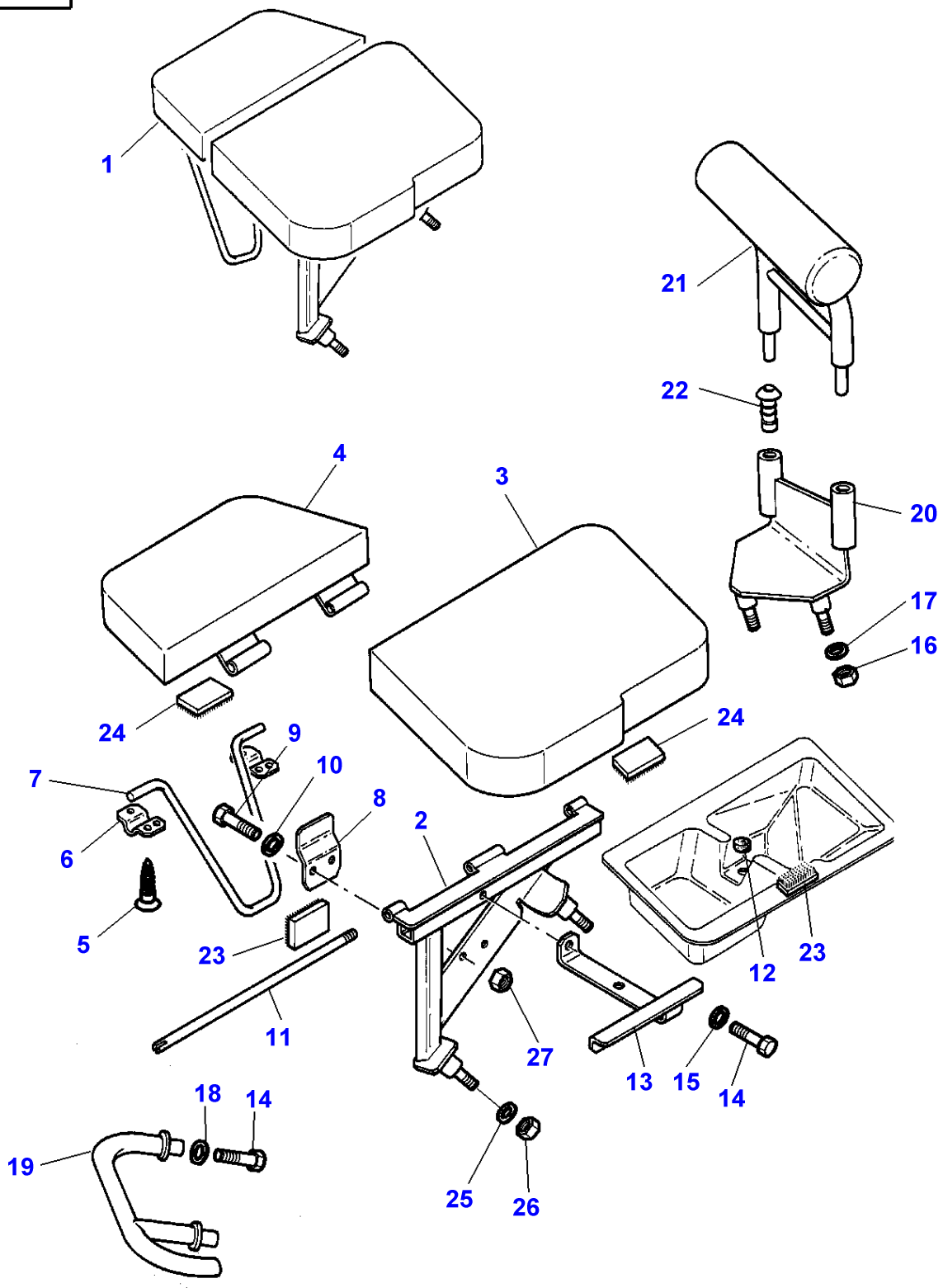
1
21
22
4
3
20
17
16
24
24
9
10
7
8
2
6
5
23
23
12
11
27
13
15
14
18
14
19
25
26

| Item | Part Number | Qty | Description | Comments |
|---|---|---|---|---|
| 1 | 3779641M92 | 1 | Seat | |
| 2 | 3712855M3 | 1 | Support | (1) |
| 3 | 3779636M1 | 1 | Cushion | (1) |
| 4 | 3779634M1 | 1 | Cushion | (1) |
| 5 | 3713140M1 | 6 | Screw | (1) |
| 6 | 3712859M1 | 2 | Bridle | (1) |
| 7 | 3712861M1 | 1 | Stand | (1) |
| 8 | 3712856M1 | 1 | Hook | |
| 9 | 339666X1 | 2 | Hex. Sock. Screw | M6X20 |
| 10 | 390971X1 | 2 | Washer | |
| 11 | 3712899M1 | 1 | Stem | (1) |
| 12 | 3616277M1 | 1 | Helmet | |
| 13 | 3712860M1 | 1 | Angle | (1) |
| 14 | 339124X1 | 2 | Hex. Sock. Screw | M8X16 |
| 15 | 390972X1 | 1 | Washer Metric | |
| 16 | 394367X1 | 3 | Locknut | M8X35 |
| 17 | 390972X1 | 3 | Washer Metric | Diameter 8MM |
| 18 | 3010467X1 | 2 | Washer | |
| 19 | 3713139M1 | 1 | Foot Rest | |
| 20 | 3712857M2 | 1 | Support | |
| 21 | 3779638M1 | 1 | Back Rest | |
| 22 | 3713138M1 | 2 | Guide Bush | |
| 23 | 3714101M1 | 2 | Band | |
| 24 | 3714102M1 | 2 | Band | |
| 25 | 390972X1 | 2 | Washer Metric | |
| 26 | 394367X1 | 2 | Locknut | |
| 27 | 1441500X1 | 2 | Locknut | M6 |

| Page Title | Page Number |
|---|---|
| Lighting Equipment - Front | 120-0005 |
| Lighting Equipment - Rear | 120-0010 |
| Field Lights | 120-0015 |
| Lighting Kits | 120-0020 |

1-AW02-606-A

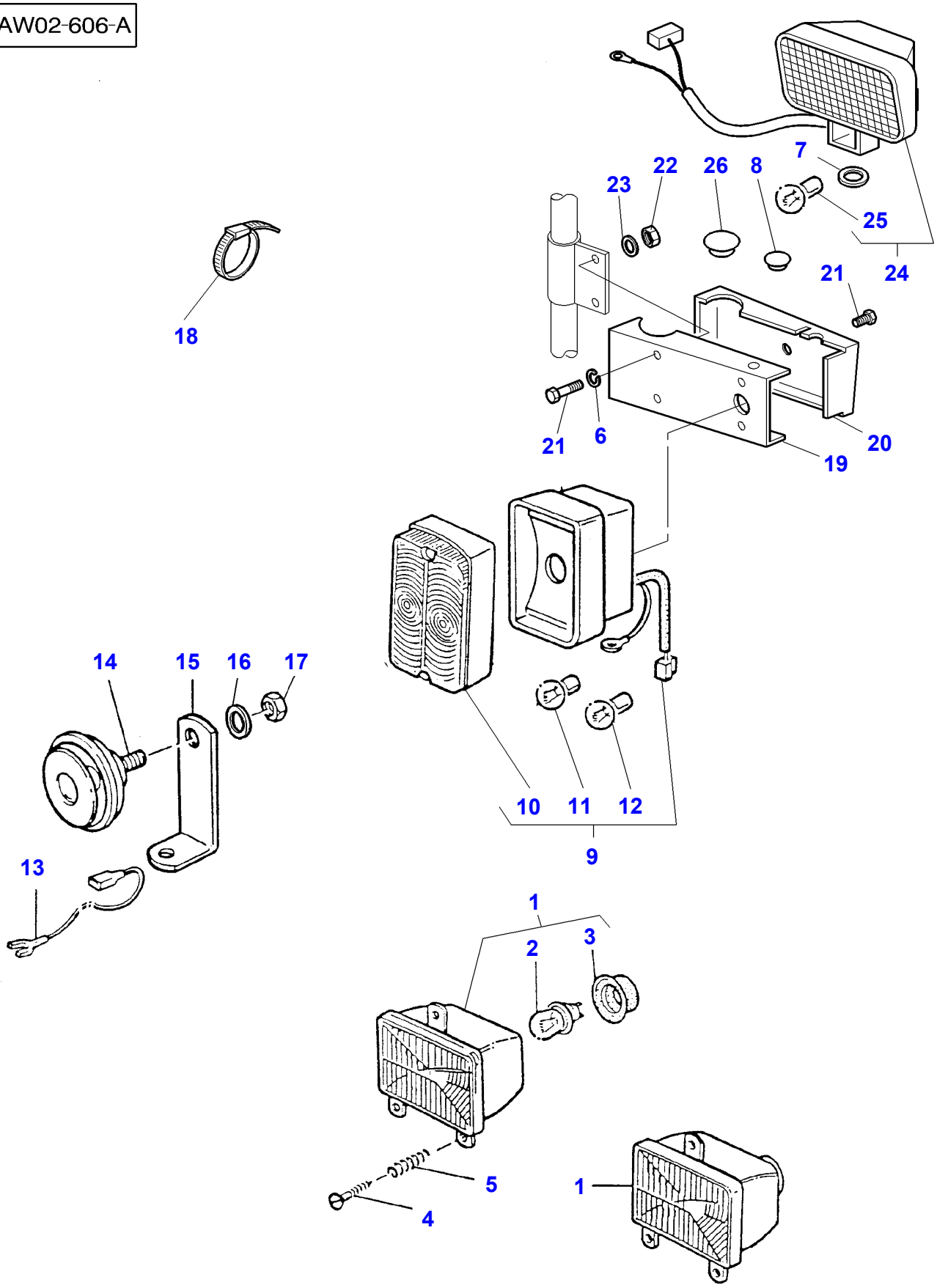

| Item | Part Number | Qty | Description | Comments |
|---|---|---|---|---|
| 1 | **3713799M91** | 2 | Headlamp | [A] |
| | **3713798M91** | 2 | Headlamp | [B] |
| 2 | **961866M1** | 1 | Bulb H/L 45/40w | (1) |
| 3 | 3388264M1 | 1 | Cap | (1) |
| 4 | 3388265M1 | 6 | Screw Special | [A,B]<br>(1) |
| 5 | 3388266M1 | 6 | Spring | [A,B]<br>(1) |
| 6 | 1441100X1 | 4 | Washer | |
| 7 | 385362X1 | 2 | Washer | |
| 8 | 1699036M1 | 2 | Plug | [C]<br>Diameter 5MM |
| 9 | **3714184M91** | 2 | Light | [E] |
| 10 | 3105505M1 | 1 | Lens | (9) |
| 11 | **1420037M1** | 1 | Bulb 12v 5w | (9) |
| 12 | **621235M1** | 1 | Bulb 12v 21w Sbc | (9) |
| 13 | 3042257M1 | 1 | Earth Strap | |
| 14 | 1678404M1 | 1 | Horn | |
| 15 | 656632M4 | 1 | Bracket | |
| 16 | 339374X1 | 1 | Lock Washer | |
| 17 | 339169X1 | 1 | Nut | |
| 18 | 3619622M1 | 10 | Cable Tie | |
| 19 | 3714316M2 | 1 | Extension | Left Hand |
| | 3714317M2 | 1 | Extension | Right Hand |
| 20 | 3714858M1 | 1 | Case Assy | Left Hand |
| | 3714857M1 | 1 | Case Assy | Right Hand |
| 21 | 3010578X1 | 6 | Screw | M5X10 |
| 22 | 390995X1 | 4 | Nut Metric | M5 |
| 23 | 390469X1 | 4 | Washer Metric | |
| 24 | **3714399M92** | 2 | Lamp | |
| 25 | **1628494M1** | 2 | Bulb H3 | (24) |
| 26 | 1699925M1 | 2 | Plug | [C]<br>Diameter 11MM |

**FOOTNOTE [A]** WHITE BULB.FOR RH DRIVING
**FOOTNOTE [B]** WHITE BULB.FOR LH DRIVING
**FOOTNOTE [C]** WITHOUT FRONT WORKING LIGHTS EXTENSION
**FOOTNOTE [E]** WITH TRAFFIC INDICATOR

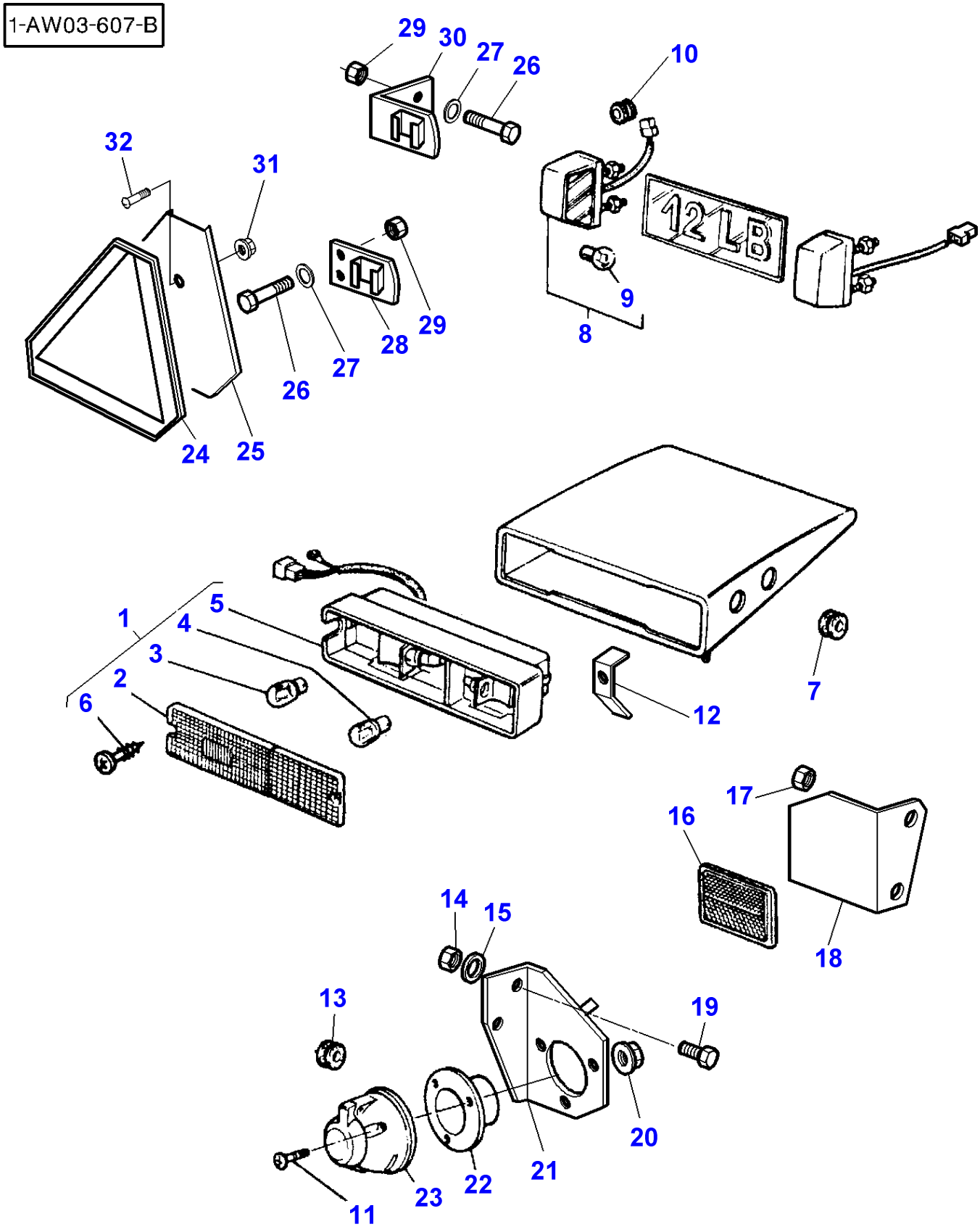
1-AW03-607-B
29
30
27
26
10
32
31
12 LB
9
8
29
28
27
26
24
25
1
5
4
3
2
6
12
7
17
16
18
14
15
13
19
20
21
22
23
11

| Item | Part Number | Qty | Description | Comments |
|---|---|---|---|---|
| 1 | **3713911M92** | 2 | Light | |
| 2 | 3105050M1 | 1 | Reflector | (1) |
| 3 | **621235M1** | 1 | Bulb 12v 21w Sbc | (1) |
| 4 | **908543M1** | 1 | Bulb S/L 21/5w | (1) |
| 5 | | 1 | Case Assy | (1) Not serviced,order REF.NO1 |
| 6 | 3001725X1 | 2 | Screw | (1) |
| 7 | 3580984M1 | 2 | Grommet | |
| 8 | 3619018M91 | 2 | N/Plate Lamp | |
| 9 | **3002706X1** | 1 | Bulb 12v 10w | (8) |
| 10 | 338977X1 | 1 | Grommet | Diameter 8-16 |
| | 3301815M1 | 1 | Grommet | Diameter 14-19 |
| 11 | 3009538X1 | 3 | Screw | M5X35 |
| 12 | 3713696M1 | 4 | Bridle | |
| 13 | 367439X1 | 2 | Grommet | Diameter 15-25 |
| 14 | 339169X1 | 2 | Nut | |
| 15 | 22428X | 2 | Lock Washer | |
| 16 | 3581703M1 | 2 | Reflector | |
| 17 | 339495X1 | 4 | Nut | M16 |
| 18 | 3778910M2 | 1 | Support | Left Hand |
| | 3778911M2 | 1 | Support | Right Hand |
| 19 | 339123X1 | 2 | Hex. Sock. Screw | M8X20 |
| 20 | 3010477X1 | 3 | Nut Metric | |
| 21 | 3580408M1 | 1 | Support | |
| 22 | 3041656M1 | 1 | Plate | |
| 23 | 409965M1 | 1 | Socket 7 Pin Sup | |
| 24 | 3712185M1 | 1 | Triangle | |
| 25 | 3389910M92 | 1 | Plate | |
| 26 | 339123X1 | 4 | Hex. Sock. Screw | M8X20 |
| 27 | 339374X1 | 4 | Lock Washer | |
| 28 | 3714371M91 | 1 | Support | |
| 29 | 339169X1 | 4 | Nut | |
| 30 | 3389907M92 | 1 | Reflector Mtg. | |
| 31 | 3010477X1 | 2 | Nut Metric | |
| 32 | 3580257M1 | 2 | Screw | M5X20 |

1-AW05-608-B

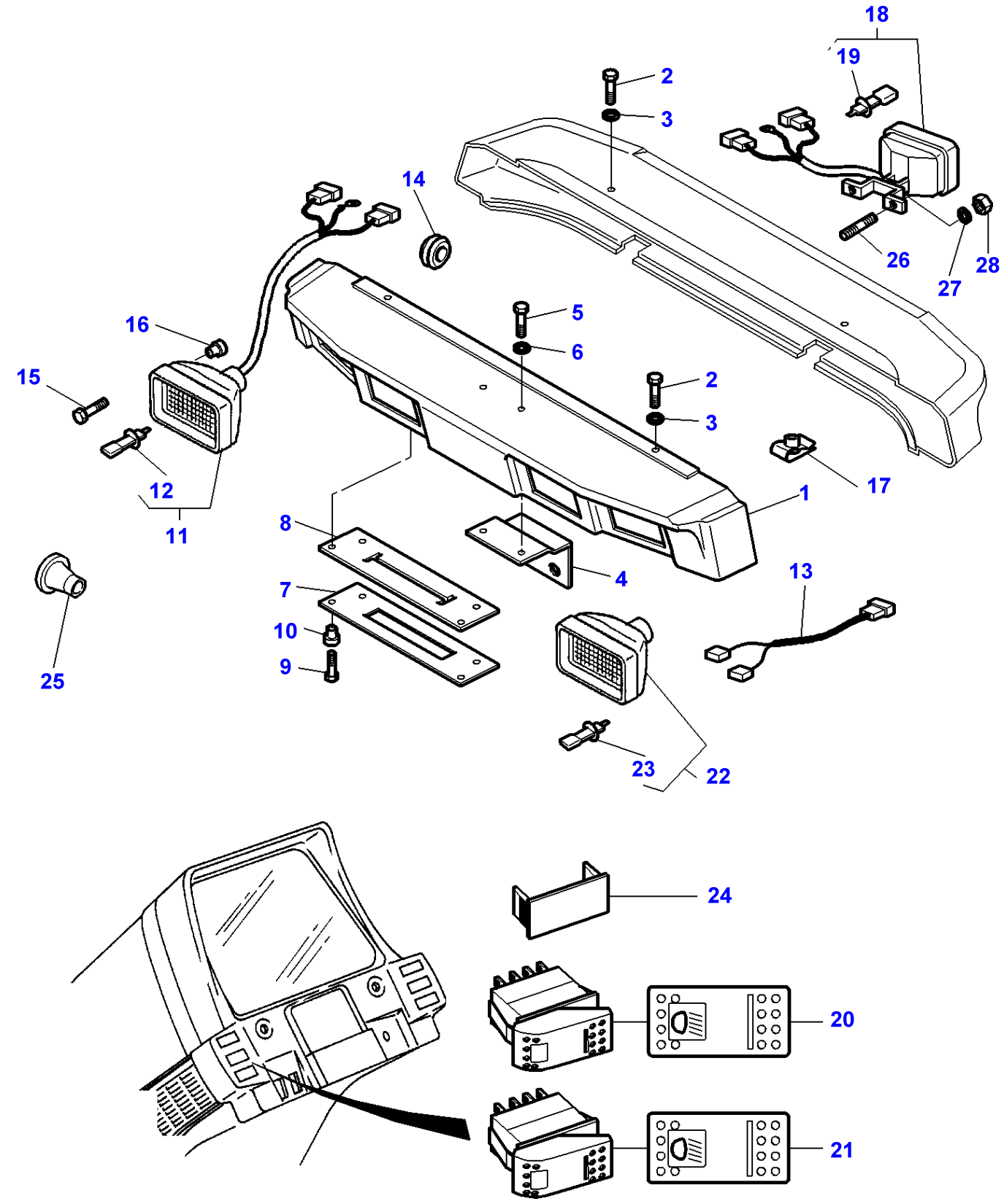

| Item | Part Number | Qty | Description | Comments |
|---|---|---|---|---|
| 1 | 3712830M1 | 1 | Visor | [A] |
| 2 | 339666X1 | 4 | Hex. Sock. Screw | M6X20 |
| 3 | 391038X1 | 4 | Washer | |
| 4 | 3714426M1 | 1 | Support | |
| 5 | 339666X1 | 2 | Hex. Sock. Screw | M6X20 |
| 6 | 391038X1 | 2 | Washer | |
| 7 | 3714459M3 | 1 | Plate | |
| 8 | 3714460M1 | 1 | Protector | |
| 9 | 3010559X1 | 4 | Screw | M4X12 |
| 10 | 3713803M1 | 4 | Nut | M4 |
| 11 | 3713134M91 | 4 | Headlamp | [E,F] |
| | 3713132M91 | 2 | Headlamp | [C] |
| 12 | **1628494M1** | 4 | Bulb H3 | (11) |
| 13 | 3713339M1 | 4 | Harness | |
| 14 | 3714694M1 | 3 | Grommet | Diameter 7/21 |
| 15 | 3009535X1 | 8 | Screw | M4X30 |
| 16 | 3019139X1 | 8 | Nut | M4 |
| 17 | 3010070X1 | 2 | Nut | M6 |
| 18 | 3713130M91 | 2 | Lamp | [C] |
| 19 | **1628494M1** | 4 | Bulb H3 | (18) |
| 20 | 3715189M1 | 1 | Switch,Indirect | |
| 21 | 3715189M1 | 1 | Switch,Indirect | |
| 22 | 3713137M1 | 2 | Lamp | |
| 23 | **3713341M1** | 2 | Bulb 12v 60/55w | (22)<br>H4 |
| 24 | 3713151M1 | X | Tap | |
| 25 | 833062M1 | 2 | Grommet | |
| 26 | 1440022X1 | 4 | Stud | M8X20 |
| 27 | 390972X1 | 4 | Washer Metric | |
| 28 | 339169X1 | 4 | Nut | |

**FOOTNOTE [A]** WITH 4 HEADLAMPS
**FOOTNOTE [C]** WITH 2 BULB WORKLIGHT
**FOOTNOTE [E]** WITH 1 BULB WORKLIGHT
**FOOTNOTE [F]** INCLUDE ITEM 13

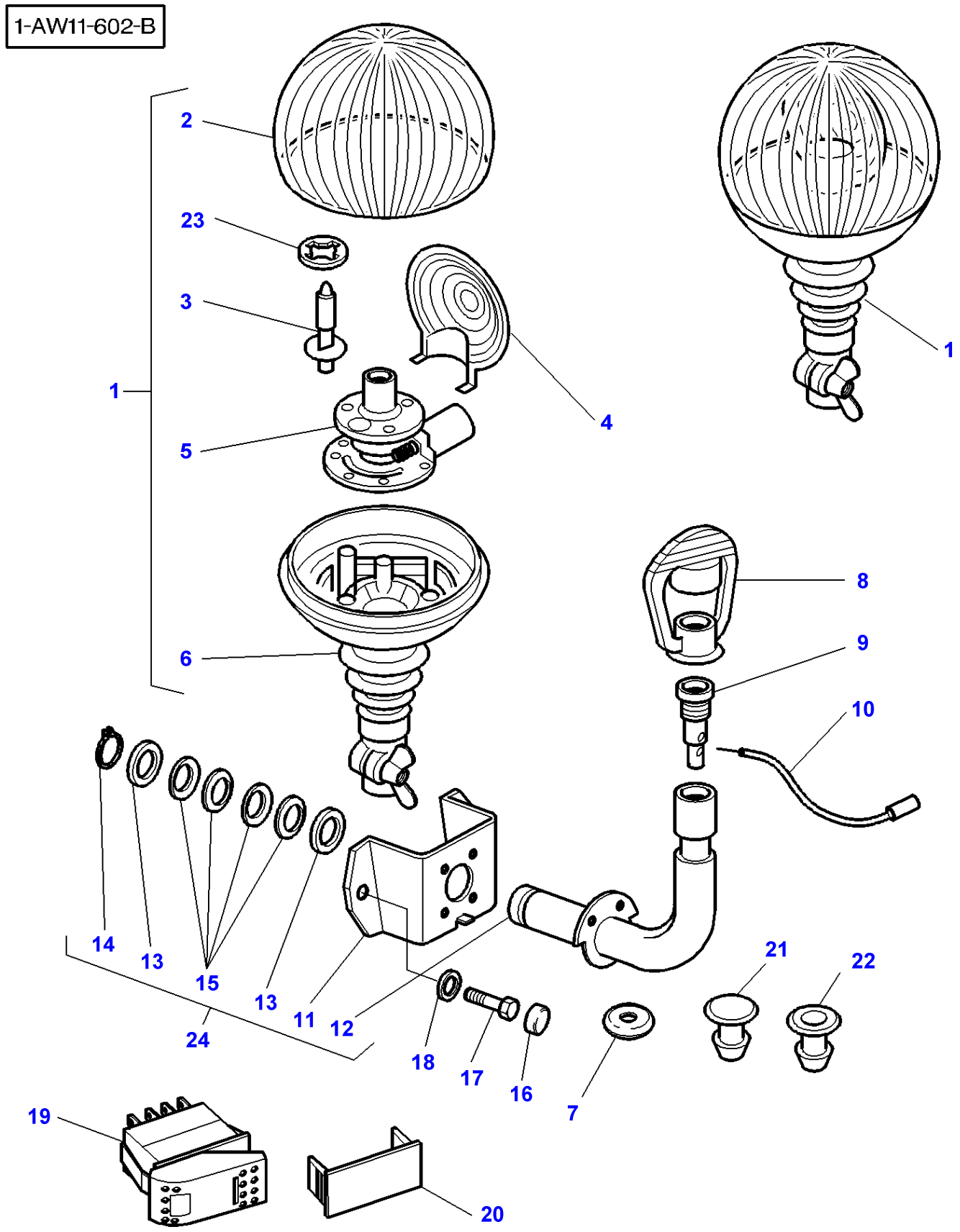
1-AW11-602-B
2
23
3
1
5
4
1
6
8
9
10
14
13
15
13
11
12
24
18
17
16
7
21
22
19
20

| Item | Part Number | Qty | Description | Comments |
|---|---|---|---|---|
| 1 | 3715144M92 | 1 | Turning Light | [A] |
| 2 | 3902469M1 | 1 | Lens | (1) |
| 3 | **3405180M1** | 1 | Bulb 12v | (1) |
| 4 | 3900282M1 | 1 | Reflectingmirror | (1) |
| 5 | 3900285M1 | 1 | Engine | (1) |
| 6 | | 1 | Support | (1) Not serviced,order REF 1 |
| 7 | 3714694M1 | 2 | Grommet | |
| 8 | 3617859M1 | 1 | Helmet | |
| 9 | 3617860M1 | 1 | Intake | |
| 10 | 3713260M1 | 1 | Wire | |
| 11 | 3778024M1 | 1 | Support | (24) |
| 12 | 3778023M1 | 1 | Tube | (24) |
| 13 | 3778025M1 | 2 | Washer | (24) Diameter 45MM |
| 14 | 3006699X1 | 1 | Clip | (24) |
| 15 | 3778094M1 | 4 | Washer | (24) |
| 16 | 3616277M1 | 4 | Helmet | |
| 17 | 339123X1 | 4 | Hex. Sock. Screw | M8X20 |
| 18 | 390972X1 | 4 | Washer Metric | |
| 19 | **3713146M1** | 1 | Switch,Indirect | |
| 20 | 3713151M1 | 1 | Tap | [B] |
| 21 | 3713404M1 | 1 | Plug | |
| 22 | 3713405M2 | 1 | Grommet | |
| 23 | 3900281M1 | 1 | Bush | (1) |
| 24 | 3778093M91 | 1 | Support | |

**FOOTNOTE [A]** ORANGE
**FOOTNOTE [B]** WITHOUT ROTATING LIGHT

| Page Title | Page Number |
|---|---|
| Front Wheels - 4 Wheel Drive | 130-0005 |
| Front Axle 4 Wheel Drive - Mudguards And Supports | 130-0010 |
| Rear Wheels - Fixing By Cone | 130-0015 |
| Rear Wheels - Fixing By Cone | 130-0020 |

1-AL03-609-A

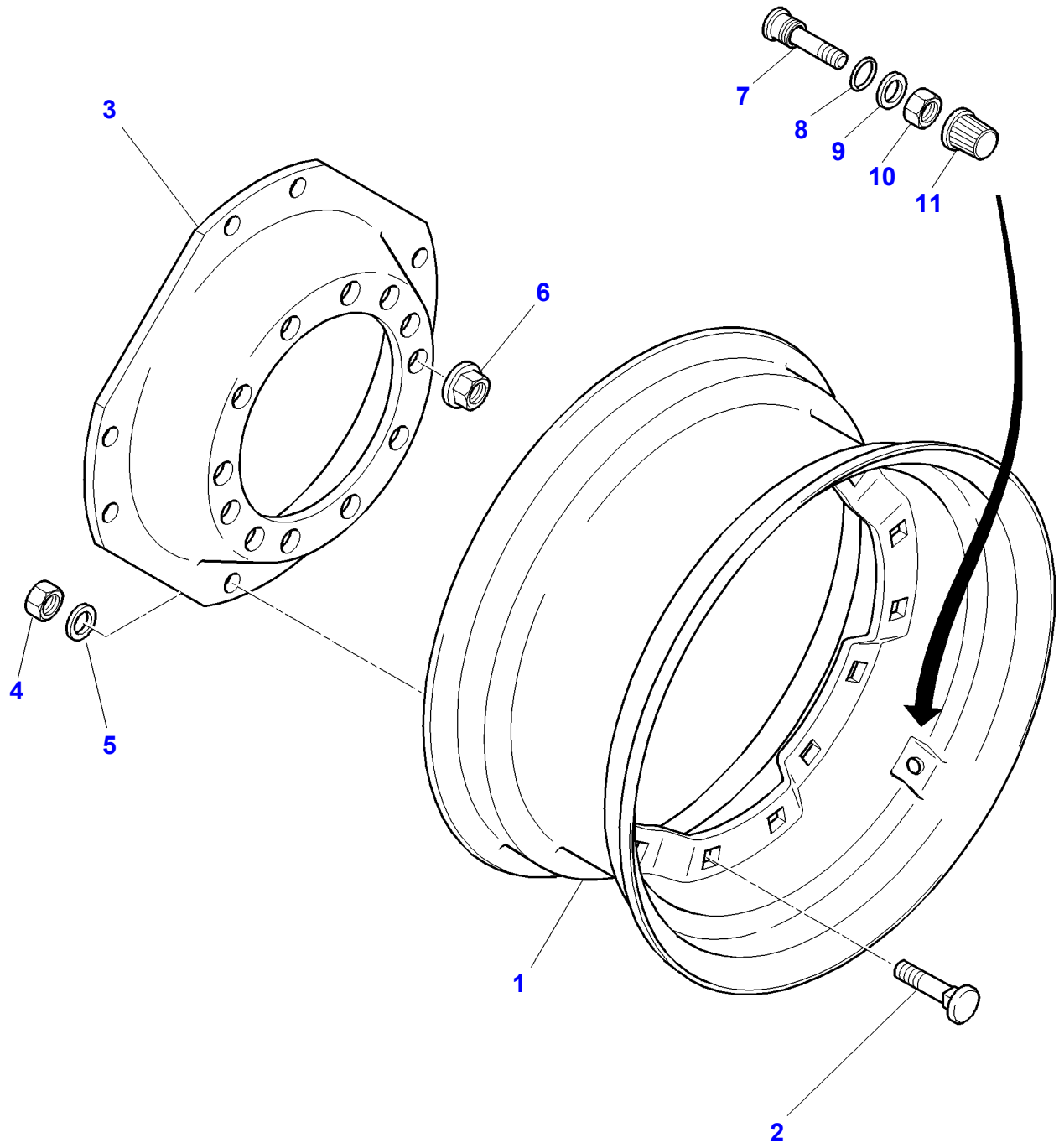

| Item | Part Number | Qty | Description | Comments |
|---|---|---|---|---|
| 1 | 72512347 | 2 | Rim | [A] DW18L X 28 |
| | 72508987 | 2 | Rim | DWW15L X 30 |
| 2 | 72506938 | 8 | Bolt | M16X50 |
| 3 | 72512677 | 2 | Disc | |
| 4 | 70950947 | 8 | Nut | |
| 5 | 70937238 | 8 | Washer | |
| 6 | **3712611M2** | 24 | Nut Special | M22 |
| 7 | 72514013 | 1 | Adaptor | |
| 8 | 71170390 | 1 | Grommet | |
| 9 | 71175919 | 1 | Washer | |
| 10 | 71175918 | 1 | Nut | |
| 11 | 71169204 | 1 | Plug | |

**FOOTNOTE [A]** USE WITH TYRES 600/70R28

1-AK14-607-B

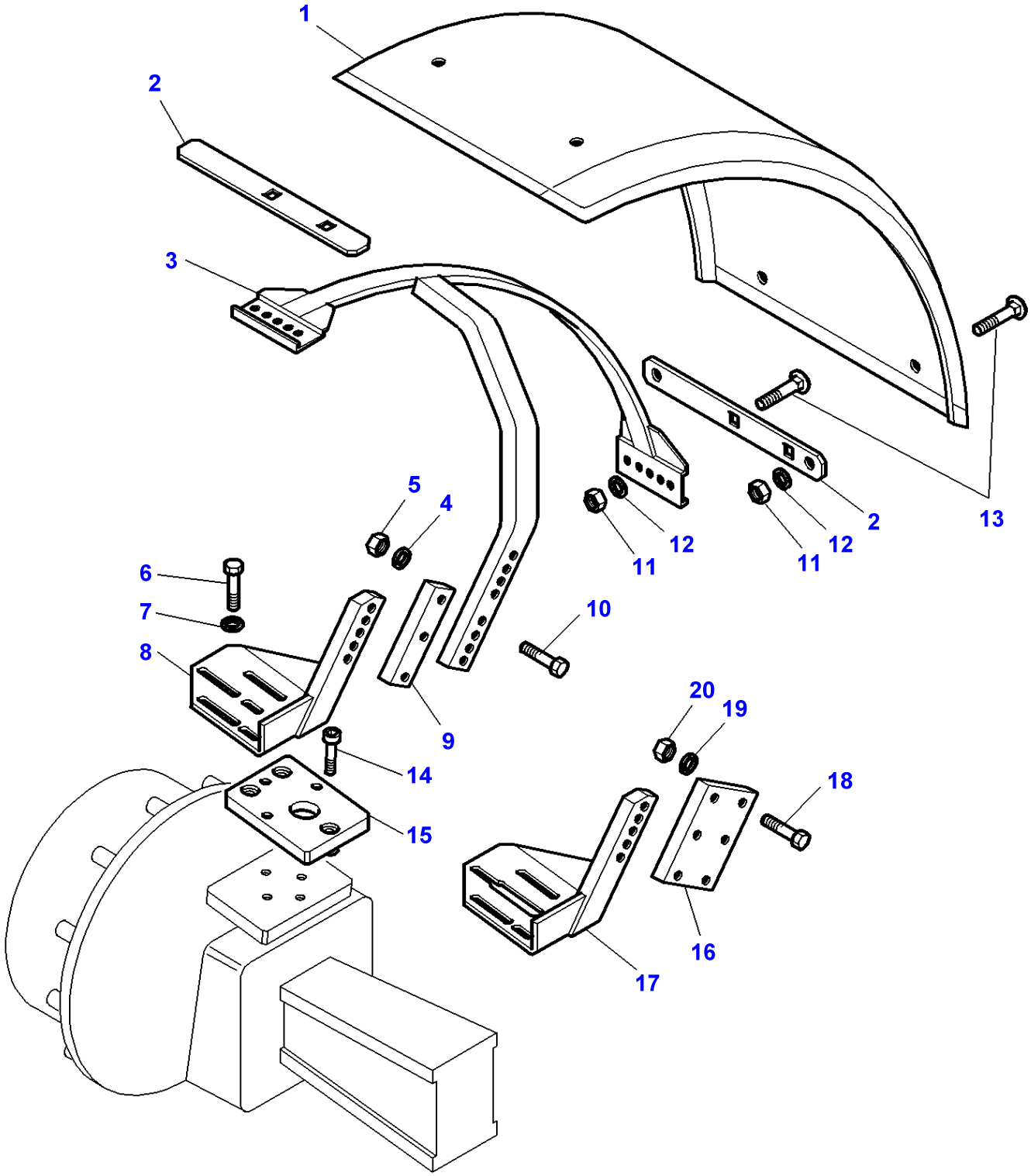

| Item | Part Number | Qty | Description | Comments |
|---|---|---|---|---|
| 1 | 3619229M2 | 2 | Fender | Width 470MM |
| | 3779567M1 | 2 | Fender | Width 520MM |
| | 3780467M1 | 2 | Fender | Width 620MM |
| 2 | 3777586M1 | 4 | Plate | Length 340MM |
| | 3777587M1 | 4 | Plate | 400MM |
| | 3780468M1 | 4 | Plate | Length 448MM |
| 3 | 3777588M1 | 1 | Support | Left Hand |
| | 3777590M1 | 1 | Support | Right Hand |
| 4 | 390735X1 | 4 | Washer | |
| 5 | 3009695X1 | 6 | Nut | |
| 6 | 3009493X1 | 6 | Hex. Sock. Screw | M10X30MM |
| 7 | 3619096M1 | 6 | Washer | |
| 8 | 3777589M1 | 1 | Support | Left Hand |
| | 3777591M1 | 1 | Support | Right Hand |
| 9 | 3777716M1 | 2 | Spacer | |
| 10 | 3009513X1 | 4 | Bolt Metric | M12X65MM |
| | 3009516X1 | 2 | Screw Metric | M12X90MM |
| 11 | 392310X1 | 12 | Nut Metric | |
| 12 | 390734X1 | 12 | Washer | |
| 13 | 390809X1 | 12 | Bolt Metric | M10X25MM |
| 14 | 3009300X1 | 4 | Screw | M12X70 |
| | 1441366X1 | 2 | Bolt Metric | M12X40 |
| 15 | 3777193M2 | 2 | Plate | |
| 16 | 3779565M2 | 2 | Spacer | |
| 17 | 3780493M1 | 1 | Support | Left Hand |
| | 3780494M1 | 1 | Support | Right Hand |
| 18 | 3009513X1 | 8 | Bolt Metric | M12X65 |
| 19 | 390735X1 | 8 | Washer | |
| 20 | 3009695X1 | 12 | Nut | |

1-AM05-611-B

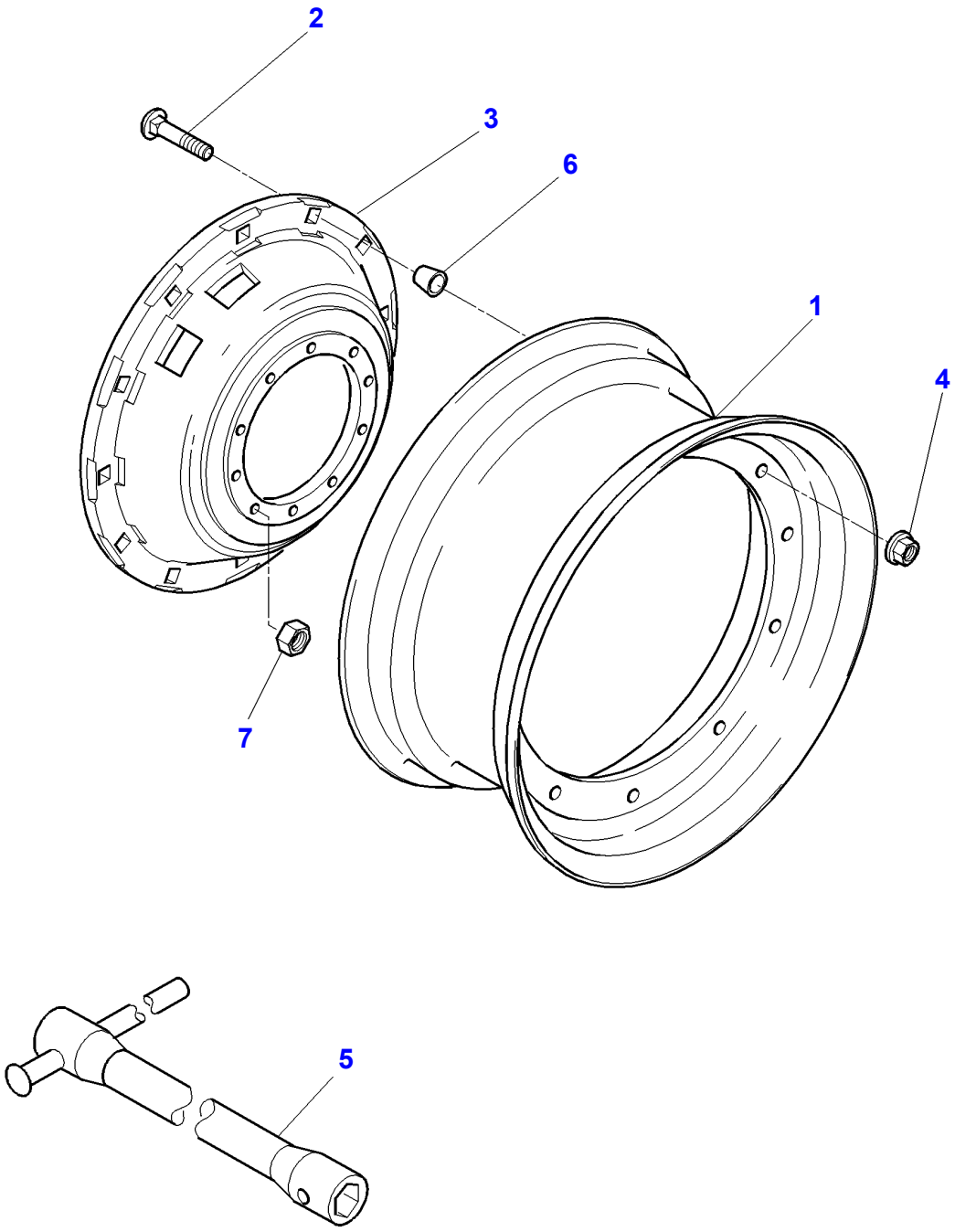

| Item | Part Number | Qty | Description | Comments |
|---|---|---|---|---|
| 1 | 3777195M1 | 2 | Rim | [A] DWWA 23 X 38 |
| | 3777196M1 | 2 | Rim | DWW 18L X 42 |
| 2 | 3384603M1 | 24 | Screw | M18X95 |
| 3 | 3716108M2 | 2 | Disc | |
| 4 | **3384600M2** | 24 | Nut Special | M18 |
| 5 | 3386406M1 | 1 | Spanner | |
| 6 | 3780302M1 | 4 | Dowel | |
| 7 | **3712611M2** | 20 | Nut Special | M22 |

**FOOTNOTE [A]** USE WITH TYRES 650/85R38

1-AM05-610-C

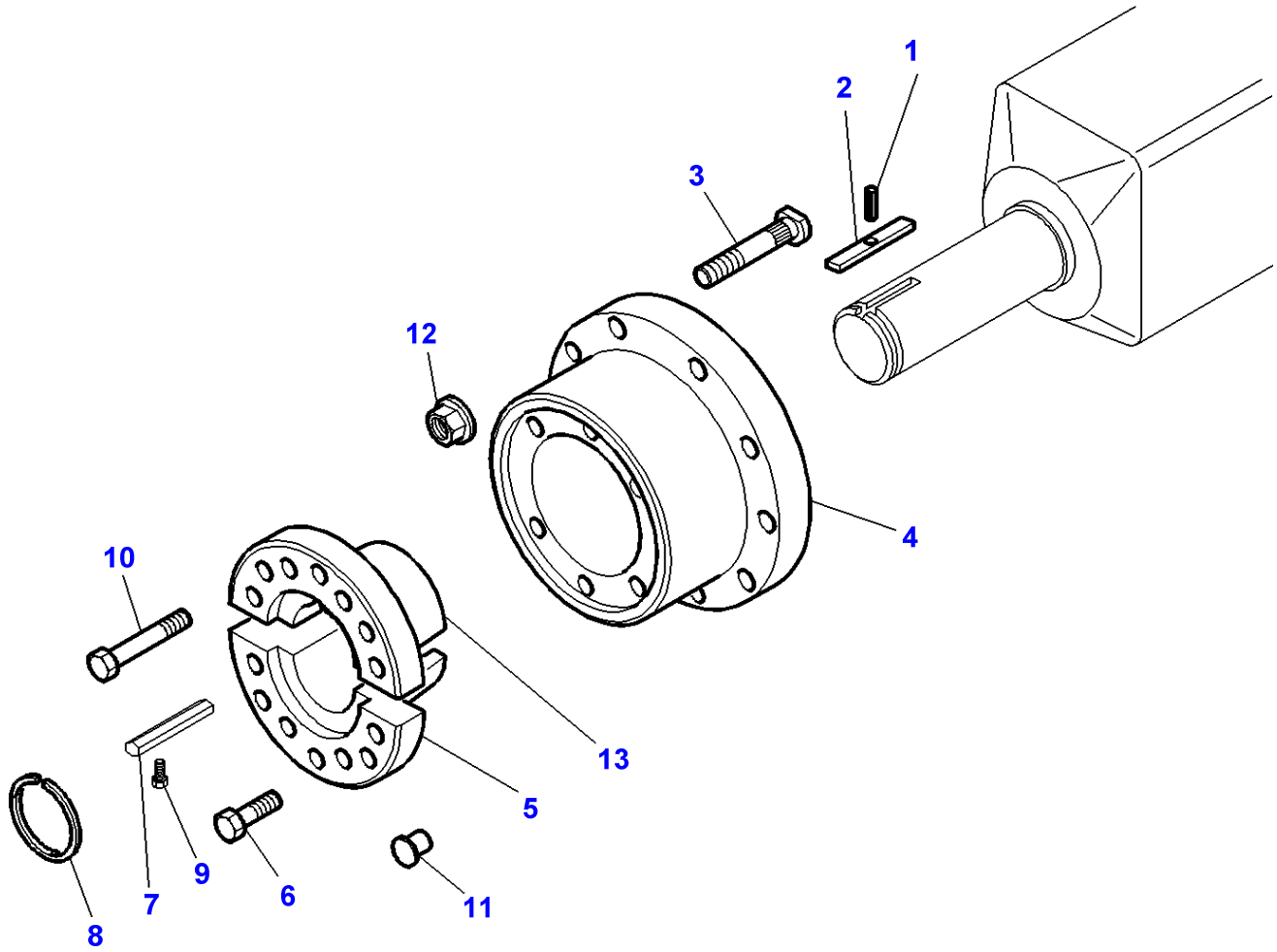

| Item | Part Number | Qty | Description | Comments |
|---|---|---|---|---|
| 1 | 763786M1 | 2 | Pin | |
| 2 | 509816M2 | 2 | Key | |
| 3 | 3716105M1 | 20 | Stud | |
| 4 | 3716107M2 | 2 | Hub | Diameter 110MM |
| 5 | 3716269M1 | 1 | Cone | Diameter 110MM<br>Replace and repair. Old interchangeable with new 3716104M1 |
| 6 | 3010047X1 | 16 | Screw | From Serial or Engine Number G322027 |
| 7 | 3716106M2 | 2 | Key | |
| 8 | 3010765X1 | 2 | Ring | |
| 9 | 1440350X1 | 2 | Screw Metric | M6X20 |
| 10 | 3010569X1 | 12 | Screw | M20X80 |
| 11 | 3791968M1 | 16 | Plug | From Serial or Engine Number G341006 |
| 12 | **3712611M2** | 20 | Nut Special | M22X1,5 |
| 13 | 3716268M1 | 1 | Cone | Diameter 110MM<br>Replace and repair. Old interchangeable with new 3716104M1 |

| Page Title | Page Number |
|---|---|
| Bolts | 180-0005 |
| Bolts - Continued | 180-0010 |
| Bolts - Continued | 180-0015 |
| Nuts | 180-0020 |
| Washers | 180-0025 |
| Circlips | 180-0030 |
| O Rings | 180-0035 |

1 - 9895 - 002

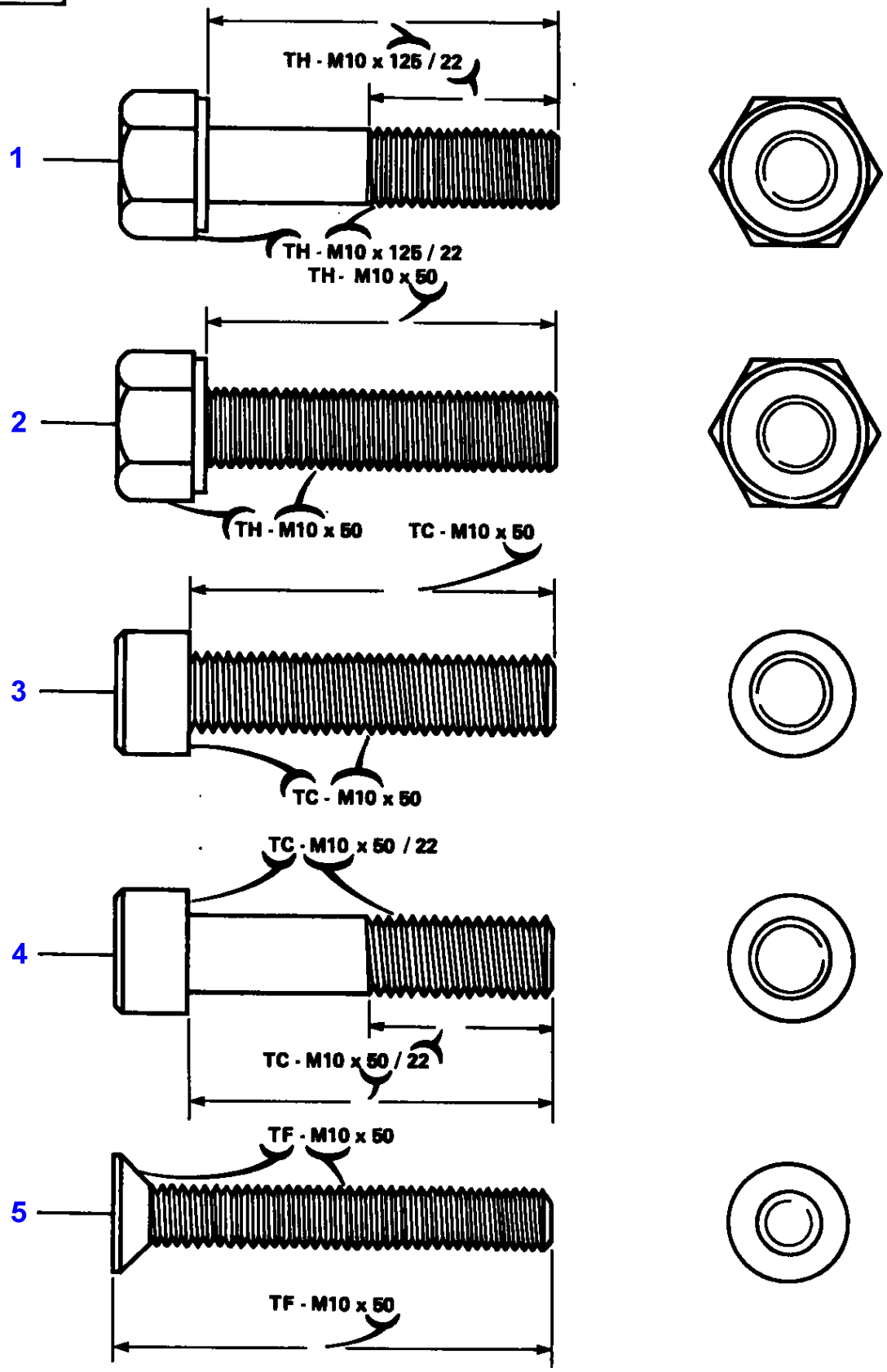
1
TH - M10 x 125 / 22
TH - M10 x 125 / 22
2
TH - M10 x 50
TH - M10 x 50
TC - M10 x 50
3
TC - M10 x 50
4
TC - M10 x 50 / 22
TC - M10 x 50 / 22
5
TF - M10 x 50
TF - M10 x 50

| Item | Part Number | Qty | Description | Comments |
|---|---|---|---|---|
| 1 | 339009X1 | X | Hex. Sock. Screw | TH-M8X35/22 |
| | 339010X1 | X | Bolt Metric | TH-M8X40/22 |
| | | | | Not serviced,order 391176X1 |
| | 339011X1 | X | Bolt Metric | TH-M8X45/22 |
| | 339019X1 | X | Hex. Sock. Screw | TH-M8X50/26 |
| | 339136X1 | X | Hex. Sock. Screw | TH-M8X90/22 |
| | 339168X1 | X | Screw | TH-M8X50/22 |
| | 339229X1 | X | Hex. Sock. Screw | TH-M6X40/18 |
| | 339234X1 | X | Bolt Metric | TH-M10X120/26 |
| | 339244X1 | X | Bolt Metric | TH-M6X55/18 |
| | 339262X1 | X | Bolt Metric | TH-M6X30/18 |
| | 339368X1 | X | Bolt Metric | TH-M8X60/22 |
| | 339475X1 | X | Hex. Sock. Screw | TH-M10X70/26 |
| | 339557X1 | X | Screw | TH-M8X120/22 |
| | 339679X1 | X | Bolt Metric | TH-M10X60/26 |
| | 339881X1 | X | Hex. Sock. Screw | TH-M16X60/38 |
| | 353546X1 | X | Screw | TH-5/16NF51/25 |
| | 353561X1 | X | Screw Unf | TH-5/8NF102/38 |
| | 353615X1 | X | Bolt Unf | TH-5/8NFX51/38 |
| | 353725X1 | X | Bolt Unc | TH-1/2NCX44/32 |
| | | | | Not serviced,order 362523X1 |
| | 353728X1 | X | Bolt Unc | TH-5/8NCX50/38 |
| | 353729X1 | X | Bolt Unc | TH-5/8NCX63/38 |
| | 353898X1 | X | Screw | TH-3/8NCX83/25 |
| | 354262X1 | X | Bolt Unc | TH-3/8NCX38/25 |
| | 354264X1 | X | Bolt Unc | TH-3/8NCX44/25 |
| | 354267X1 | X | Bolt Unc | TH-3/8NCX57/25 |
| | 354273X1 | X | Bolt Unc | TH-3/8NCX76/25 |
| | 354493X1 | X | Screw | TH-1/4NFX70/38 |
| | 354604X1 | X | Bolt Unc | TH-1/4NCX54/19 |
| | 354628X1 | X | Screw | TH-3/8NCX89/25 |
| | 354629X1 | X | Bolt Unc | TH-3/8NCX92/25 |
| | 354630X1 | X | Screw | TH-3/8NCX95/25 |
| | 354649X1 | X | Bolt Unc | TH-1/2NCX57/32 |
| | 354653X1 | X | Screw | TH-1/2NCX70/32 |
| | 354655X1 | X | Bolt Unc | TH-1/2NCX76/32 |
| | 354663X1 | X | Screw | TH-1/2NC102/32 |
| | 354726X1 | X | Bolt Unc | TH-3/4NC102/44 |
| | 357002X1 | X | Screw | TH-7/8NC108/51 |
| | 357041X1 | X | Screw | TH-1/2NC172/32 |
| | 357263X1 | X | Screw | TH-1/2NC181/32 |
| | 353683X1 | X | Bolt Unc | TH-5/16NC38/23 |
| | 362487X1 | X | Screw | TH-7/16NC48/28 |
| | 353725X1 | X | Bolt Unc | TH-1/2NCX44/32 |
| | 362782X1 | X | Screw | TH-1/2NC102/32 |
| | 362786X1 | X | Screw | TH-1/2NC108/38 |
| | 368445X1 | X | Screw | TH-5/8NCX70/54 |
| | 369189X1 | X | Screw | TH-5/16NC38/28 |
| | 377824X1 | X | Bolt Unc | TH-7/16NC35/28 |
| | | | | Not serviced,order 377824X1 |
| | 377824X1 | X | Bolt Unc | TH-7/16NC35/28 |
| | 390864X1 | X | Bolt Metric | TH-M16X80/38 |
| | 391244X1 | X | Bolt Metric | TH-M6X45/18 |
| | 391245X1 | X | Bolt Metric | TH-M8X130/28 |
| | 391328X1 | X | Screw Metric | TH-M20X65/46 |
| | 391870X1 | X | Screw | TH-M14X1,50 |
| | | | | X35/22 |
| | 391884X1 | X | Bolt Metric | TH-M6X50/18 |
| | 391889X1 | X | Screw | TH-M16X70/38 |
| | 3010045X1 | X | Screw | TH-M20X90/46 |
| | 511411M3 | X | Screw | TH-3/4NC165/89 |
| | 832566M1 | X | Screw | TH-1/2NCX38/22 |
| 2 | 339081X1 | X | Screw Metric | TH-M10X20 |
| | 339123X1 | X | Hex. Sock. Screw | TH-M8X20 |
| | 339124X1 | X | Hex. Sock. Screw | TH-M8X16 |
| | 339139X1 | X | Screw Metric | TH-M12X25 |
| | 339160X1 | X | Screw | TH-M5X10 |
| | 339228X1 | X | Screw Metric | TH-M8X12 |
| | 339230X1 | X | Hex. Sock. Screw | TH-M6X10 |
| | 339275X1 | X | Hex. Sock. Screw | TH-M16X35 |
| | 339287X1 | X | Screw Metric | TH-M8X35 |

| Item | Part Number | Qty | Description | Comments |
|---|---|---|---|---|
| 2 | 339337X1 | X | Hex. Sock. Screw | TH-M8X30 |
| 2 | 339401X1 | X | Screw Metric | TH-M10X25 |
| 2 | 339451X1 | X | Screw Metric | TH-M10X30 |
| | | | | Not serviced,order 3009493X1 |
| 2 | 339560X1 | X | Hex. Sock. Screw | TH-M6X16 |
| 2 | 339563X1 | X | Screw Metric | TH-M5X20 |
| 2 | 339666X1 | X | Hex. Sock. Screw | TH-M6X20 |
| 2 | 339721X1 | X | Screw Metric | TH-M5X16 |
| 2 | 339761X1 | X | Hex. Sock. Screw | TH-M8X25 |
| 2 | 353518X1 | X | Screw Unf | TH-5/16UNFX22 |
| 2 | 353562X1 | X | Screw Unf | TH-7/16UNFX35 |
| 2 | 353593X1 | X | Screw Unf | TH-1/2UNFX32 |
| 2 | 353665X1 | X | Screw Unc | TH-1/4UNCX13 |
| 2 | 353667X1 | X | Screw Unc | TH-1/4UNCX19 |
| 2 | 353677X1 | X | Screw Unc | TH-5/16UNCX19 |
| 2 | 353679X1 | X | Screw Unc | TH-5/16UNCX25 |
| 2 | 353690X1 | X | Screw Unc | TH-3/8UNCX22 |
| 2 | 353691X1 | X | Screw Unc | TH-3/8UNCX25 |
| 2 | 353693X1 | X | Screw Unc | TH-3/8UNCX32 |
| 2 | 353726X1 | X | Screw Unc | TH-5/8UNCX38 |
| 2 | 353727X1 | X | Screw Unc | TH-5/8UNCX44 |
| 2 | 354276X1 | X | Screw Unc | TH-1/2UNCX32 |
| 2 | 353901X1 | X | Screw Unc | TH-5/8UNCX32 |
| 2 | 354702X1 | X | Screw | TH-3/4UNCX25 |
| 2 | 354704X1 | X | Screw Unc | TH-3/4UNCX32 |
| 2 | 354708X1 | X | Screw Unc | TH-3/4UNCX44 |
| 2 | 354710X1 | X | Screw Unc | TH-3/4UNCX51 |
| 2 | 361526X1 | X | Screw | TH-7/16UNFX25 |
| 2 | 362429X1 | X | Screw | TH-3/8UNCX16 |
| 2 | 362519X1 | X | Screw | TH-1/2UNCX38 |
| 2 | 390990X1 | X | Screw Metric | TH-M5X12 |
| 2 | 391074X1 | X | Hex. Sock. Screw | TH-M6X12 |
| 2 | 391176X1 | X | Screw Metric | TH-M8X40 |
| 2 | 391180X1 | X | Screw | TH-M14X25 |
| 2 | 391246X1 | X | Screw | TH-M5X8 |
| 2 | 391269X1 | X | Screw Metric | TH-M16X30 |
| 2 | 391561X1 | X | Hex. Sock. Screw | TH-M10X45 |
| 2 | 395316X1 | X | Bolt Metric | TH-M16X1,50X35 |
| 2 | 391932X1 | X | Screw | TH-M10X25 |
| 2 | 392054X1 | X | Screw | TH-M10X22 |
| 3 | 339367X1 | X | Screw Metric | TC-M3X8 |
| 3 | 357834X1 | X | Screw Unc | TC-1/4UNCX25 |
| 3 | 390962X1 | X | Screw Metric | TC-M5X10 |
| 3 | 391148X1 | X | Screw | TC-M8X20 |
| 3 | 392409X1 | X | Screw | TC-M5X6 |
| 4 | 357747X1 | X | Screw | TC-3/8NCX51/32 |
| 4 | 357749X1 | X | Screw Unc | TC-3/8NCX57/32 |
| 4 | 357750X1 | X | Screw Unc | TC-3/8NCX60/32 |
| 4 | 357831X1 | X | Screw | TC-1/4NCX57/25 |
| 4 | 357838X1 | X | Screw Unc | TC-1/4NCX38/25 |
| 4 | 357884X1 | X | Screw | TC-3/8NCX70/32 |
| 4 | 360861X1 | X | Screw | TC-7/16NC70/35 |
| 4 | 360874X1 | X | Screw | TC-5/8NCX64/45 |
| 4 | 391981X1 | X | Screw Metric | TC-M8X35/28 |
| 5 | 392404X1 | X | Screw | TF-M5X16 |

1 - 9895 - 002

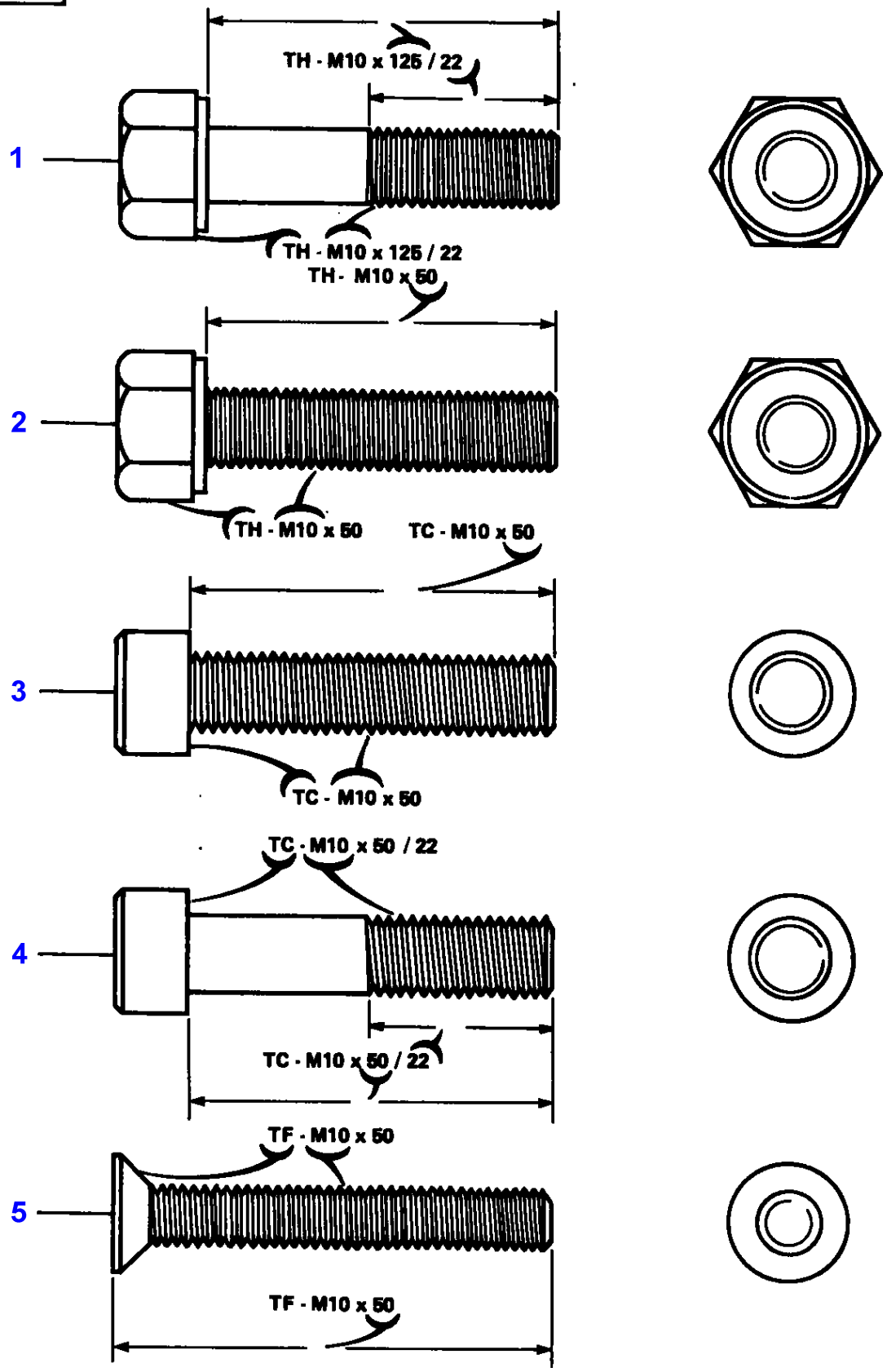
1
TH - M10 x 125 / 22
TH - M10 x 125 / 22
2
TH - M10 x 50
TH - M10 x 50
TC - M10 x 50
3
TC - M10 x 50
4
TC - M10 x 50 / 22
TC - M10 x 50 / 22
5
TF - M10 x 50
TF - M10 x 50

| Item | Part Number | Qty | Description | Comments |
|---|---|---|---|---|
| 1 | 1440827X1 | X | Screw | TH-M5X30/16 |
| | 1442602X1 | X | Screw Metric | TH-M10X1,25 X100/26 |
| | 1442668X1 | X | Screw | TH-M20X80/46 |
| | 3001429X1 | X | Screw | TH-M10X35/26 |
| | 3008563X1 | X | Screw | TH-M20X150/22 |
| | 3009229X1 | X | Screw | TH-M12X80/30 |
| | 3009242X1 | X | Screw | TH-M16X70/38 |
| | 3009511X1 | X | Bolt Metric | TH-M12X55/30 |
| | 3009512X1 | X | Bolt Metric | TH-M12X60/30 |
| | 3009515X1 | X | Bolt Metric | TH-M12X80/30 |
| | 3010045X1 | X | Screw | TH-M20X90/46 |
| | 3019851X1 | X | Bolt Metric | TH-M12X45/30 |
| | 3019856X1 | X | Bolt Metric | TH-M12X80/30 |
| | 3019865X1 | X | Screw | TH-M16X75/38 |
| | 3019894X1 | X | Screw | TH-M6X100/18 |
| | 3384129M1 | X | Screw | TH-M20X55/46 |
| | 3384130M1 | X | Screw | TH-M22X90/50 |
| | 3384131M1 | X | Bolt Metric | TH-M16X55/38 |
| | 3384132M1 | X | Screw | TH-M16X150/44 |
| | 3384267M1 | X | Screw | TH-M16X180/44 |
| | 3386071M1 | X | Screw | TH-1/2NC196/38 |
| | 3386216M1 | X | Screw | TH-M20X60/46 |
| | 3386471M1 | X | Screw | TH-M20X365/65 |
| | 3388474M1 | X | Screw | TH-M16X1,50 X80/38 |
| | 3389552M1 | X | Screw | TH-M20X155/35 |
| | 3389553M1 | X | Screw | TH-M24X165/60 |
| | 3580795M1 | X | Screw | TH-M16X80/38 |
| | 3580796M1 | X | Screw | TH-M22X100/60 |
| 2 | 3002009X1 | X | Screw Metric | TH-M12X40 Not serviced,order 3002009X1 |
| | 1441704X1 | X | Screw Metric | TH-M20X40 |
| | 1444071X1 | X | Screw | TH-M8X8 |
| | 3001968X1 | X | Screw | TH-M20X60 |
| | 3002009X1 | X | Screw Metric | TH-M12X40 |
| | 3008654X1 | X | Screw | TH-M20X45 |
| | 3009492X1 | X | Hex. Sock. Screw | TH-M10X25 |
| | 3009493X1 | X | Hex. Sock. Screw | TH-M10X30 |
| | 3009494X1 | X | Screw Metric | TH-M10X35 |
| | 3009745X1 | X | Screw | TH-M18X55 |
| | 3580231M1 | X | Screw | TH-M20X75 |
| 3 | 1440349X1 | X | Screw Metric | TC-M8X30 |
| | 1441000X1 | X | Screw Metric | TC-M8X16 |
| | 1444203X1 | X | Screw | TC-M6X10 |
| | 3000926X1 | X | Screw | TC-M5X10 |
| | 3001379X1 | X | Screw | TC-M8X20 |
| | 3001414X1 | X | Screw Metric | TC-M8X12 |
| | 3007934X1 | X | Screw Metric | TC-M6X16 |
| | 3009281X1 | X | Screw | TC-M6X16 |
| | 3009282X1 | X | Screw | TC-M6X25 |
| | 3009285X1 | X | Screw | TC-M8X16 |
| | 3389857M1 | X | Screw | TC-M5X16 |
| | 3389885M1 | X | Screw | TC-M5X12 |
| | 3389886M1 | X | Screw | TC-M5X25 |
| | 3580257M1 | X | Screw | TC-M5X20 |
| 4 | 1441764X1 | X | Screw Metric | TC-M8X60/28 |
| | 3009284X1 | X | Screw | TC-M6X45/24 |
| | 3009289X1 | X | Screw Metric | TC-M8X70/28 |
| | 3009296X1 | X | Screw | TC-M10X80/32 |
| | 3009300X1 | X | Screw | TC-M12X70/36 |
| | 3009313X1 | X | Screw | TC-M16X90/44 |
| | 3009538X1 | X | Screw | TC-M5X35/25 |
| | 3019911X1 | X | Screw | TC-M14X45/40 |
| 5 | 3004514X1 | X | Screw | TF-M5X10 |
| | 3004550X1 | X | Screw Metric | TF-M4X16 |
| | 3008891X1 | X | Screw Metric | TF-M4X10 |
| | 3389280M1 | X | Screw | TF-M5X25 |
| | 3580138M1 | X | Screw | TF-M5X12 |

1 - 9895 - 002

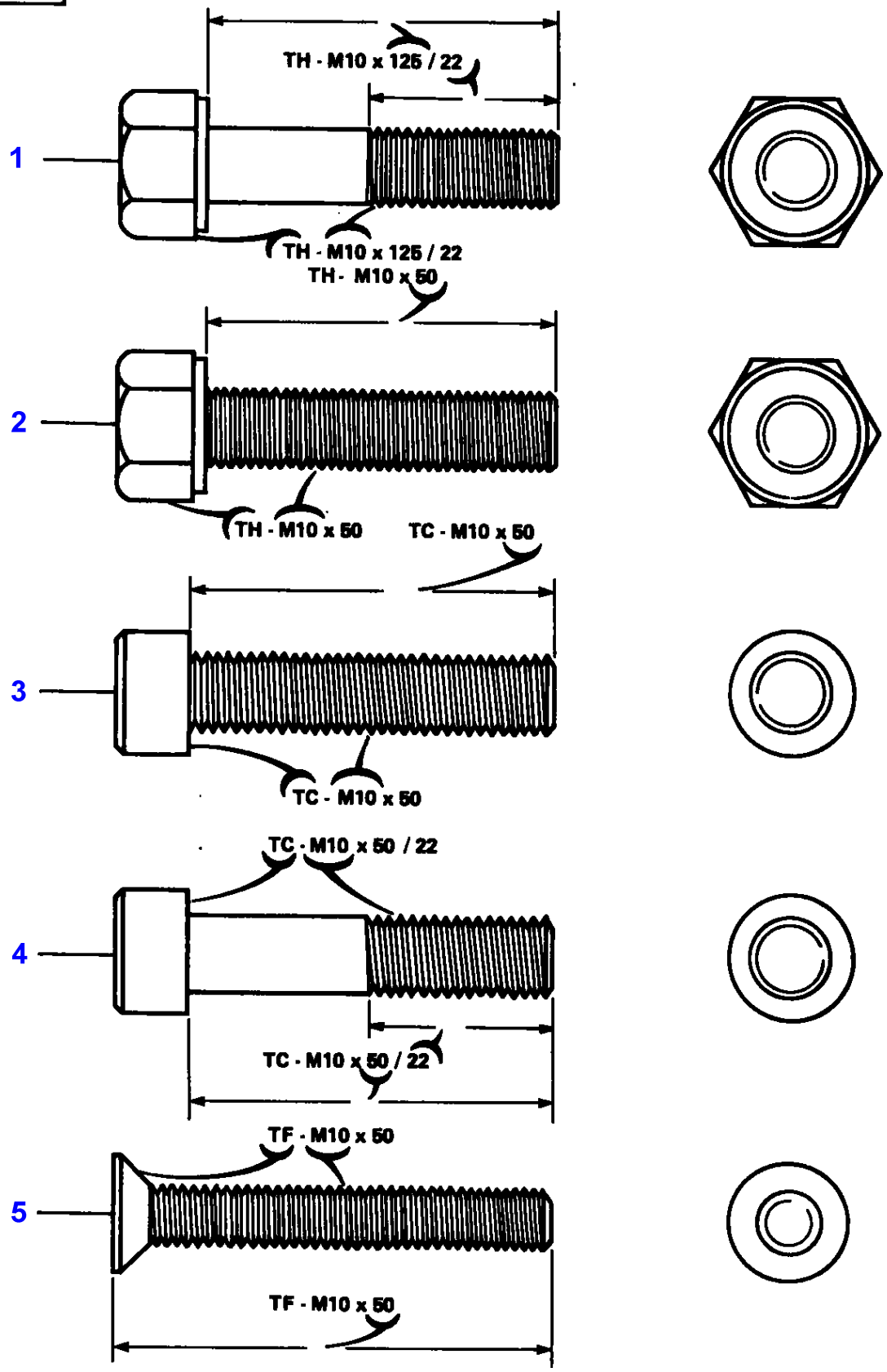
1
TH - M10 x 125 / 22
TH - M10 x 125 / 22
2
TH - M10 x 50
TH - M10 x 50
TC - M10 x 50
3
TC - M10 x 50
4
TC - M10 x 50 / 22
TC - M10 x 50 / 22
5
TF - M10 x 50
TF - M10 x 50

| Item | Part Number | Qty | Description | Comments |
|---|---|---|---|---|
| 1 | 1440827X1 | X | Screw | TH-M5X30/16 |
| | 1442602X1 | X | Screw Metric | TH-M10X1,25 X100/26 |
| | 1442668X1 | X | Screw | TH-M20X80/46 |
| | 3001429X1 | X | Screw | TH-M10X35/26 |
| | 3008563X1 | X | Screw | TH-M20X150/22 |
| | 3009229X1 | X | Screw | TH-M12X80/30 |
| | 3009242X1 | X | Screw | TH-M16X70/38 |
| | 3009511X1 | X | Bolt Metric | TH-M12X55/30 |
| | 3009512X1 | X | Bolt Metric | TH-M12X60/30 |
| | 3009515X1 | X | Bolt Metric | TH-M12X80/30 |
| | 3010045X1 | X | Screw | TH-M20X90/46 |
| | 3019851X1 | X | Bolt Metric | TH-M12X45/30 |
| | 3019856X1 | X | Bolt Metric | TH-M12X80/30 |
| | 3019865X1 | X | Screw | TH-M16X75/38 |
| | 3019894X1 | X | Screw | TH-M6X100/18 |
| | 3384129M1 | X | Screw | TH-M20X55/46 |
| | 3384130M1 | X | Screw | TH-M22X90/50 |
| | 3384131M1 | X | Bolt Metric | TH-M16X55/38 |
| | 3384132M1 | X | Screw | TH-M16X150/44 |
| | 3384267M1 | X | Screw | TH-M16X180/44 |
| | 3386071M1 | X | Screw | TH-1/2NC196/38 |
| | 3386216M1 | X | Screw | TH-M20X60/46 |
| | 3386471M1 | X | Screw | TH-M20X365/65 |
| | 3388474M1 | X | Screw | TH-M16X1,50 X80/38 |
| | 3389552M1 | X | Screw | TH-M20X155/35 |
| | 3389553M1 | X | Screw | TH-M24X165/60 |
| | 3580795M1 | X | Screw | TH-M16X80/38 |
| | 3580796M1 | X | Screw | TH-M22X100/60 |
| 2 | 3002009X1 | X | Screw Metric | TH-M12X40 Not serviced,order 3002009X1 |
| | 1441704X1 | X | Screw Metric | TH-M20X40 |
| | 1444071X1 | X | Screw | TH-M8X8 |
| | 3001968X1 | X | Screw | TH-M20X60 |
| | 3002009X1 | X | Screw Metric | TH-M12X40 |
| | 3008654X1 | X | Screw | TH-M20X45 |
| | 3009492X1 | X | Hex. Sock. Screw | TH-M10X25 |
| | 3009493X1 | X | Hex. Sock. Screw | TH-M10X30 |
| | 3009494X1 | X | Screw Metric | TH-M10X35 |
| | 3009745X1 | X | Screw | TH-M18X55 |
| | 3580231M1 | X | Screw | TH-M20X75 |
| 3 | 1440349X1 | X | Screw Metric | TC-M8X30 |
| | 1441000X1 | X | Screw Metric | TC-M8X16 |
| | 1444203X1 | X | Screw | TC-M6X10 |
| | 3000926X1 | X | Screw | TC-M5X10 |
| | 3001379X1 | X | Screw | TC-M8X20 |
| | 3001414X1 | X | Screw Metric | TC-M8X12 |
| | 3007934X1 | X | Screw Metric | TC-M6X16 |
| | 3009281X1 | X | Screw | TC-M6X16 |
| | 3009282X1 | X | Screw | TC-M6X25 |
| | 3009285X1 | X | Screw | TC-M8X16 |
| | 3389857M1 | X | Screw | TC-M5X16 |
| | 3389885M1 | X | Screw | TC-M5X12 |
| | 3389886M1 | X | Screw | TC-M5X25 |
| | 3580257M1 | X | Screw | TC-M5X20 |
| 4 | 1441764X1 | X | Screw Metric | TC-M8X60/28 |
| | 3009284X1 | X | Screw | TC-M6X45/24 |
| | 3009289X1 | X | Screw Metric | TC-M8X70/28 |
| | 3009296X1 | X | Screw | TC-M10X80/32 |
| | 3009300X1 | X | Screw | TC-M12X70/36 |
| | 3009313X1 | X | Screw | TC-M16X90/44 |
| | 3009538X1 | X | Screw | TC-M5X35/25 |
| | 3019911X1 | X | Screw | TC-M14X45/40 |
| 5 | 3004514X1 | X | Screw | TF-M5X10 |
| | 3004550X1 | X | Screw Metric | TF-M4X16 |
| | 3008891X1 | X | Screw Metric | TF-M4X10 |
| | 3389280M1 | X | Screw | TF-M5X25 |
| | 3580138M1 | X | Screw | TF-M5X12 |

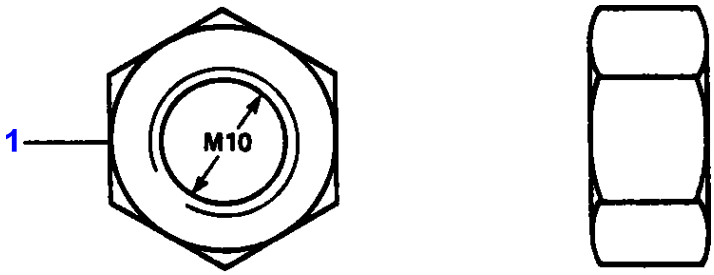


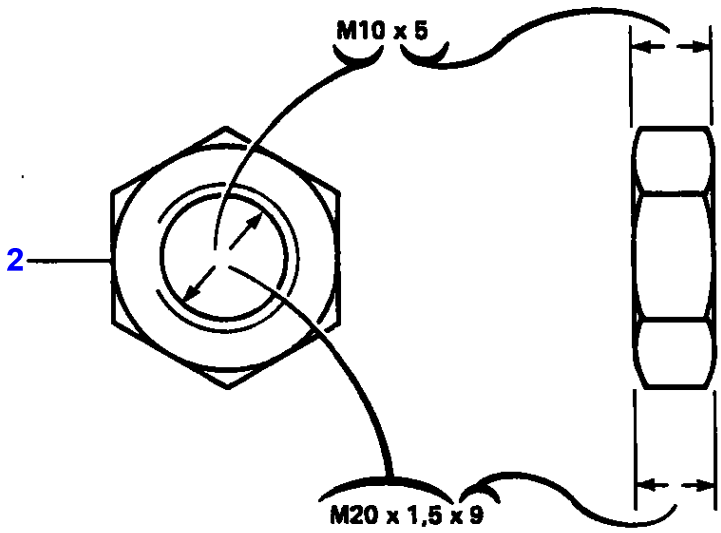


1-9932 - 001

| Item | Part Number | Qty | Description | Comments |
|---|---|---|---|---|
| 1 | 339030X1 | X | Nut Metric | H-M6 |
| | 339034X1 | X | Nut | H-M16 |
| | 3009747X1 | X | Nut | H-M20 |
| | 339068X1 | X | Nut Metric | H-M24 |
| | 339169X1 | X | Nut | H-M8 |
| | 339402X1 | X | Nut | H-M10 |
| | 339571X1 | X | Nut Metric | H-M14X1,5 |
| | 353427X1 | X | Nut Unf | H-5/8 UNF |
| | 353437X1 | X | Nut Unf | H-1/2 UNF |
| | 353920X1 | X | Nut Unf | H-7/8 UNF |
| | 353926X1 | X | Nut Unf | H-1/2 UNF |
| | 354120X1 | X | Nut | H-NO10 UNC |
| | 355564X1 | X | Nut Unc | H-NO10 UNC |
| | 355566X1 | X | Nut Unc | H-3/8 UNC |
| | 355645X1 | X | Nut Unc | H-7/16 UNC |
| | 355646X1 | X | Nut Unf | H-1" UNC |
| | 353918X1 | X | Nut Unf | H-1/4 UNF |
| | 368748X1 | X | Nut | H-5/8 UNF |
| | 375100X1 | X | Nut Unc | H-3/4 UNC |
| | 375101X1 | X | Nut Unc | H-7/8 UNC |
| | 3818216M1 | X | Nut Unf | H-7/16 UNF |
| | 377641X1 | X | Nut Unf | H-5/8 UNF |
| | 390345X1 | X | Nut Metric | H-M8 |
| | 391216X1 | X | Nut Metric | H-M3 |
| | 1443615X1 | X | Nut Metric | H-M4 |
| 2 | 339186X1 | X | Nut Metric | H-M12X7 |
| | 339495X1 | X | Nut | H-M16X8 |
| | 339592X1 | X | Nut Metric | H-M20X1,5X9 |
| | 353429X1 | X | Nut Unf | H-5/8UNFX9,6 |
| | 358706X1 | X | Nut | H-3/4UNFX8 |
| | 375107X1 | X | Nut Unc | H-1/4UNCX4 |
| | 375112X1 | X | Nut Unc | H-5/8UNCX9,6 |
| | 390191X1 | X | Nut Metric | H-M30X1X6 |
| | 390197X1 | X | Nut Metric | H-M24X1,5X10 |
| | 390333X1 | X | Nut Metric | H-M10X1,00X6 |

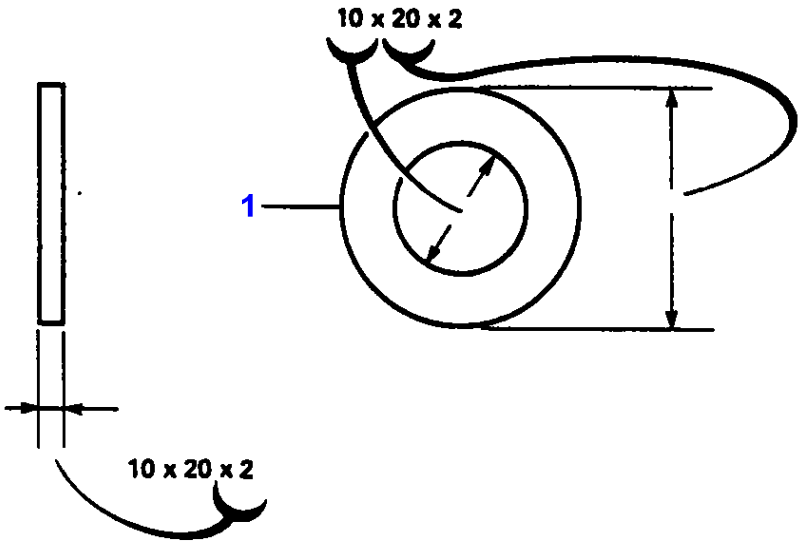


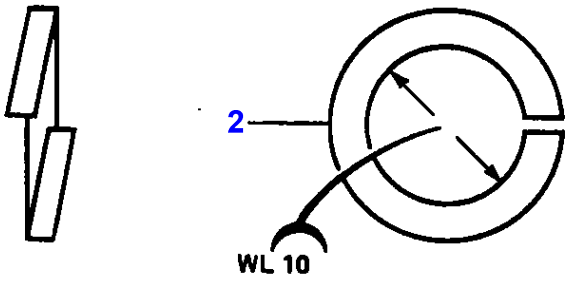


1-9945-001

| Item | Part Number | Qty | Description | Comments |
|---|---|---|---|---|
| 1 | 36477X | X | Washer | 30X42X3 |
| | 339024X1 | X | Washer Metric | 8,4X17X2 |
| | 339456X1 | X | Washer | 12X25X3 |
| | 339534X1 | X | Washer Metric | 11X21X2 |
| | 339588X1 | X | Washer | 6,5X18X1,5 |
| | 353754X1 | X | Washer | 7,1X15,9X1,6 |
| | 353755X1 | X | Washer | 8,7X17,5X1,6 |
| | 353756X1 | X | Washer | 10,3X20,6X1,6 |
| | 353757X1 | X | Washer | 11,9X23,4X1,6 |
| | 390735X1 | X | Washer | 13,5X27X2,4 |
| | 353763X1 | X | Washer | 23,8X44,5X3,4 |
| | 353766X1 | X | Washer | 33,3X69,9X4,2 |
| | 353771X1 | X | Washer | 10,3X20,6X2,4 |
| | 353774X1 | X | Washer | 16,7X33,3X3,4 |
| | 353775X1 | X | Washer | 20,6X38,1X4,6 |
| | 353776X1 | X | Washer | 23,8X44,5X4,6 |
| | 355618X1 | X | Washer | 9,5X22,2X2,1 |
| | 366496X1 | X | Washer | 20,6X38,1X4,6 |
| | 377329X1 | X | Washer | 16,8X28,4X4,2 |
| | 377378X1 | X | Washer | 19,7X27X2,6 |
| | 385361X1 | X | Washer | 9X17X3 |
| | 385362X1 | X | Washer | 11X21X3 |
| | 385363X1 | X | Washer | 13,5X24X1,2 |
| | 339102X1 | X | Washer | 4,3X9X0,8 |
| | 390469X1 | X | Washer Metric | 5,5X10X1 |
| | 390585X1 | X | Washer Metric | 16X25X2 |
| | 390703X1 | X | Washer Metric | 3,2X7X0,5 |
| | 390734X1 | X | Washer | 10,5X21X2 |
| | 390735X1 | X | Washer | 13X24X2,5 |
| | 390749X1 | X | Washer | 21X32X2 |
| | 390971X1 | X | Washer | 6,4X12X1,6 |
| | 390972X1 | X | Washer Metric | 8,4X17X1,6 |
| | 390973X1 | X | Washer Metric | 15X28X2,5 |
| | 390977X1 | X | Washer Metric | 4,3X8X0,5 |
| | 391039X1 | X | Washer Metric | 9X24X2 |
| | 391130X1 | X | Lock Washer | 6,1X11,8X1,6 |
| | 391565X1 | X | Washer Metric | 8,4X15X1,6 |
| | 391583X1 | X | Washer | 13X20X1 |
| | 1440264X1 | X | Washer Metric | 10,5X34X4 |
| | 339381X1 | X | Lock Washer | 5,1X9,2X1,2 |
| | | | | Replace and repair. Old interchangeable with new 1440312X1 |
| | 1440921X1 | X | Washer Metric | 8,4X22X2 |
| | 1441664X1 | X | Washer Metric | 17,5X30X3 |
| | 1443775X1 | X | Washer | 5,3X15X6 |
| | 1444353X1 | X | Washer | 17X27X26 |
| | 1618290M1 | X | Washer | 13,5X76X10 |
| | 1693972M1 | X | Washer | 6X15X1,5 |
| | 1693980M1 | X | Washer | 14,2X24X2 |
| | 1719922M1 | X | Washer | 8,1X23X1 |
| | 3001852X1 | X | Washer | 4,3X12X1 |
| | 3019560X1 | X | Washer | 5,5X15X1,6 |
| | 3019569X1 | X | Washer | 4,6X9X2 |
| | 3019571X1 | X | Washer | 6,7X12,3X2 |
| | 3019575X1 | X | Washer Metric | 17,6X29,7X2 |
| 2 | 339374X1 | X | Lock Washer | WL 8 |
| | 339375X1 | X | Lock Washer | WL 6 |
| | 339376X1 | X | Lock Washer | WL 10 |
| | 339377X1 | X | Lock Washer | WL 16 |
| | 339380X1 | X | Washer | WL 14 |
| | 339381X1 | X | Lock Washer | WL 5 |
| | | | | Replace and repair. Old interchangeable with new 1440312X1 |
| | 339382X1 | X | Lock Washer | WL 4 |
| | 353432X1 | X | Lock Washer | WL 11,1 |
| | 353434X1 | X | Lock Washer | WL 3/8" |
| | 353439X1 | X | Lock Washer | WL 12,7 |
| | 353443X1 | X | Washer | WL 1" |
| | 353445X1 | X | Lock Washer | WL NO 10 |

1 - 9974 - 002

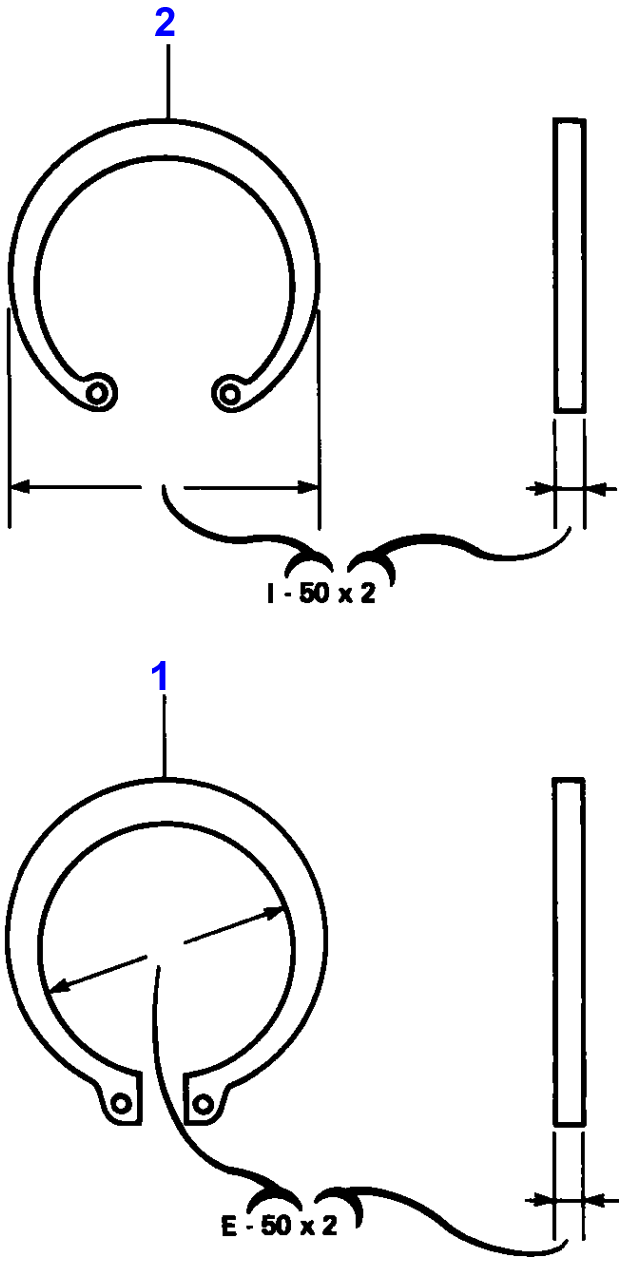

| Item | Part Number | Qty | Description | Comments |
|---|---|---|---|---|
| 1 | 22608X | X | Circlip | E-44,4 X 1,57 |
| | 22783X | X | Circlip | E-63,5 X 2 |
| | 339356X1 | X | Circlip | E-14 X 1 |
| | 354476X1 | X | Clip | E-12,7 X 1,05 |
| | 368232X1 | X | Clip | E-9,5 X 1,07 |
| | 391129X1 | X | Circlip | E-50 X 2 |
| | 395520X1 | X | Circlip | E-40 X 2,5 |
| | 1440474X1 | X | Circlip | E-12 X1 |
| | 1440478X1 | X | Circlip | E-45 X 1,75 |
| | 1440533X1 | X | Circlip | E-70 X 2,5 |
| 2 | 339364X1 | X | Clip | I-25 X 1,2 |
| | 356005X1 | X | Clip | I-146 X 3,17 |
| | 358886X1 | X | Clip | I-44 X 1,07 |
| | 390936X1 | X | Circlip | I-40 X 1,75 |
| | 1440913X1 | X | Segment | I-75 X 2,5 |
| | 1441403X1 | X | Circlip | I-145 X 4 |
| | 1442446X1 | X | Circlip | I-14 X 1 |

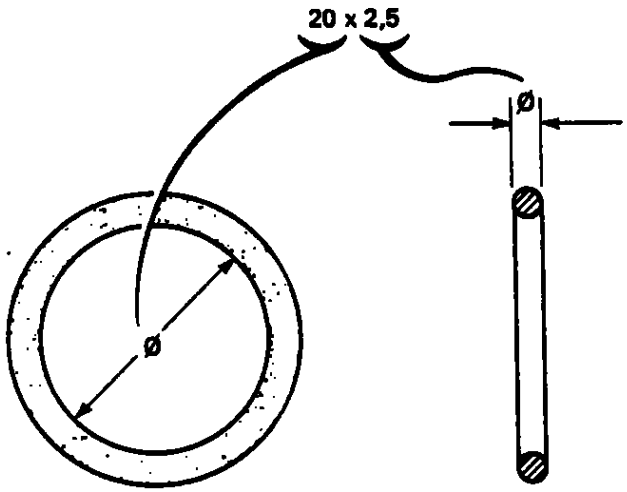


1-9975-001

| Part Number | Qty | Description | Comments |
|---|---|---|---|
| 152613M1 | X | O Ring | 89 X 3,6 |
| 195561M1 | X | O Ring | 9,5 X 1,6 |
| 195562M1 | X | O Ring | 11,1 X 2,4 |
| 195632M1 | X | O Ring | 20,2 X 3,53 |
| 195869M1 | X | O Ring | 10,8 X 1,8 |
| 330982X1 | X | O Ring | 10,7 X 1,9 |
| 359118X1 | X | O Ring | 145,6 X 3,5 |
| **365392X1** | X | O Ring | 22,2 X 2,4 |
| 366434X1 | X | O Ring | 34,6 X 2,62 |
| 368374X1 | X | O Ring | 20,6 X 2,4 |
| 3010474X1 | X | O Ring | 30,2 X 1,6 |
| 368541X1 | X | O Ring | 17,5 X 1,6 |
| 371119X1 | X | O Ring | 7,6 X 1,6 |
| **831452M1** | X | O Ring | 11,8 X 2,1 |
| 831495M1 | X | O Ring | 8,8 X 1,9 |
| 831496M1 | X | O Ring | 10,4 X 1,9 |
| 1852568M1 | X | O Ring | 16,2 X 2,3 |
| 832276M1 | X | O Ring | 18,80 X 3 |
| 835025M1 | X | O Ring | 23,5 X 3 |
| 851258M1 | X | O Ring | 15,9 X 2,4 |
| 1009659M1 | X | O Ring | 72,6 X 3,5 |
| 1441121X1 | X | O Ring | 7,9 X 1,6 |
| 1441141X1 | X | O Ring | 12,42 X 1,78 |
| 1441176X1 | X | O Ring | 94,8 X 3,53 |
| 1441634X1 | X | O Ring | 33 X 2,6 |
| 1610254M1 | X | O Ring | 56,8 X 2,6 |
| 1639382M1 | X | O Ring | 30 X 2 |
| 1749437M1 | X | O Ring | 45 X 2,5 |
| 1749440M1 | X | O Ring | 37,7 X 3,5 |
| **1807116M1** | X | O Ring | 23 X 2,5 |
| 3019395X1 | X | O Ring | 11,4 X 2,1 |
| 3019396X1 | X | O Ring | 13,4 X 2,1 |
| 3019397X1 | X | O Ring | 15,4 X 2,1 |
| 3019398X1 | X | O Ring | 19,4 X 2,1 |
| 3019455X1 | X | O Ring | 23,7 X 2,8 |
| 3102079M1 | X | O Ring | 11 X 2 |
| 3102326M1 | X | O Ring | 26 X 2,5 |
| 3102329M1 | X | O Ring | 18 X 2,5 |
| 3104855M1 | X | O Ring | 13,5 X 1,7 |
| 3104856M1 | X | O Ring | 11,5 X 1,7 |
| 3384856M1 | X | O Ring | 15 X 2,5 |
| 3388349M1 | X | O Ring | 220 X 3 |
| 3388350M1 | X | O Ring | 115 X 3 |
| 3389314M1 | X | O Ring | 8,93 X 2 |
| 3582204M1 | X | O Ring | 42,5 X 1,8 |
| 3580247M1 | X | O Ring | 59,9 X 3,5 |

8180
MASSEY FERGUSON

© Agrifarm

8180